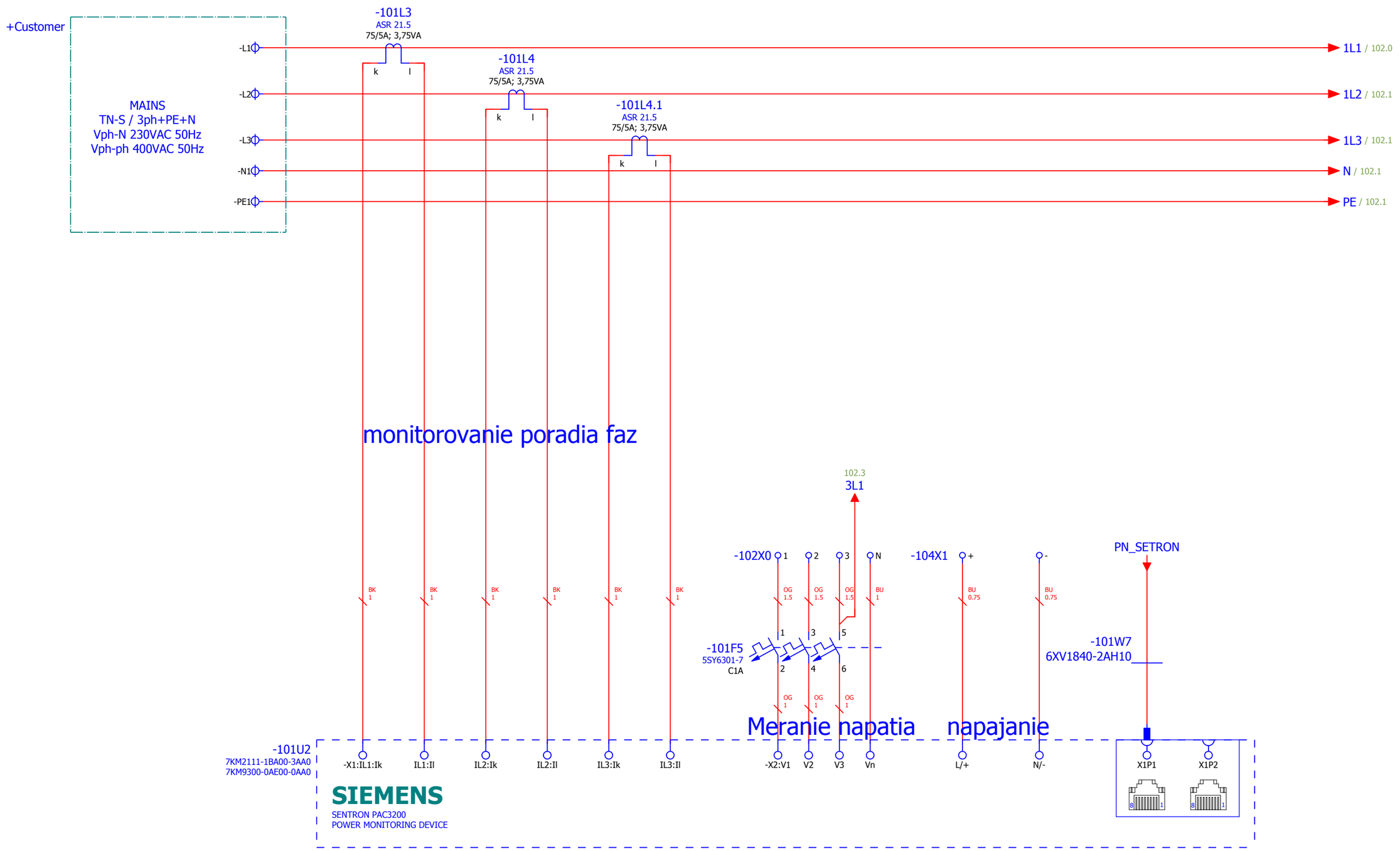
+Customer
MAINS
TN-S / 3ph+PE+N
Vph-N 230VAC 50Hz
Vph-ph 400VAC 50Hz
-L1
-L2
-L3
-N1
-PE1
-101L3
ASR 21.5
75/5A; 3,75VA
-101L4
ASR 21.5
75/5A; 3,75VA
-101L4.1
ASR 21.5
75/5A; 3,75VA
1L1 / 102.0
1L2 / 102.1
1L3 / 102.1
N / 102.1
PE / 102.1
monitorovanie poradia faz
102.3
3L1
-102X0
-104X1
PN_SETRON
-101F5
5SY6301-7
C1A
-101W7
6XV1840-2AH10
Meranie napatia
napajanie
-101U2
7KM2111-1BA00-3AA0
7KM9300-0AE00-0AA0
-X1:IL1:Ik
IL1:Il
IL2:Ik
IL2:Il
IL3:Ik
IL3:Il
-X2:V1
V2
V3
Vn
L/+
N/-
X1P1
X1P2
SIEMENS
SENTRON PAC3200
POWER MONITORING DEVICE

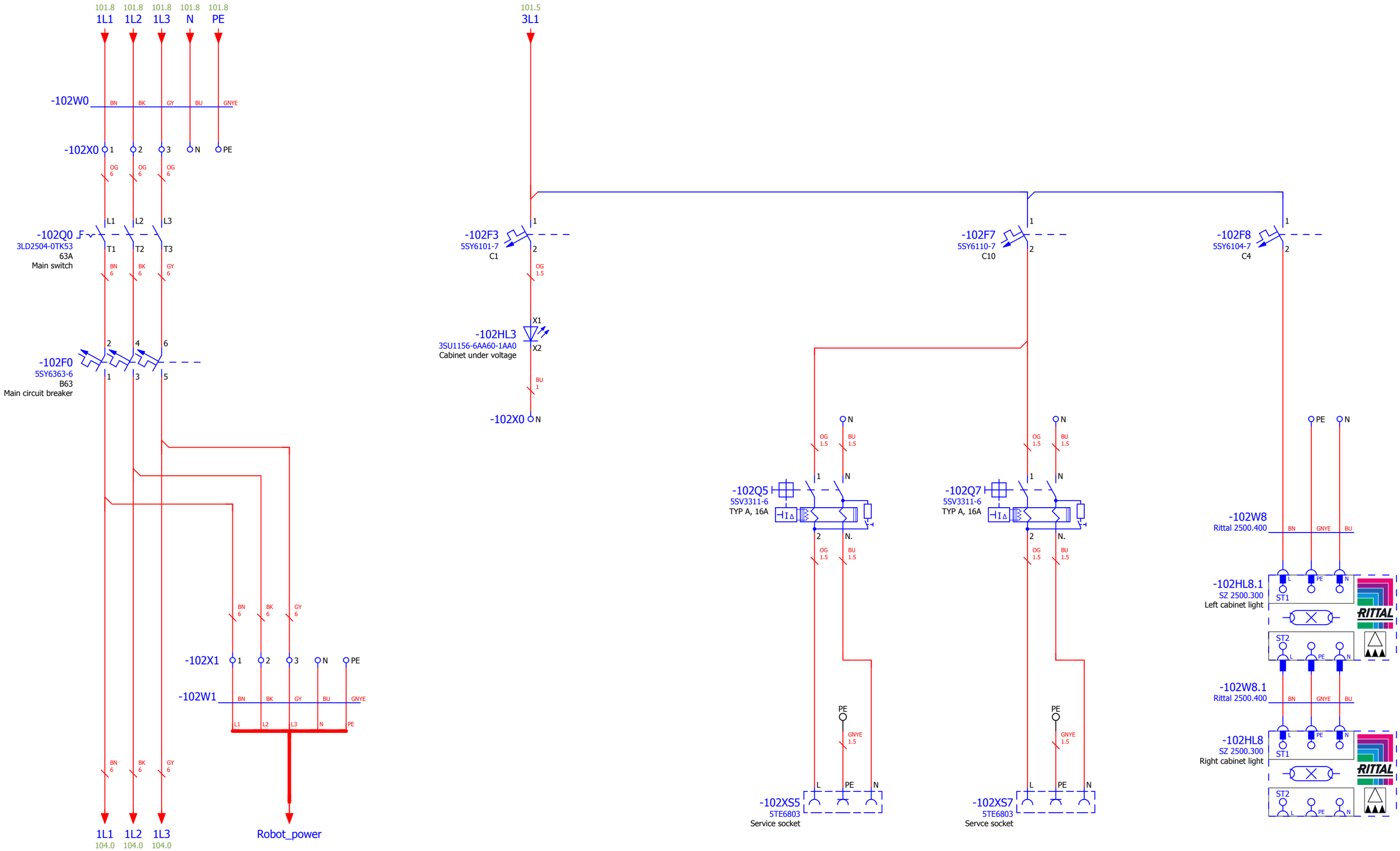
101.8 1L1 101.8 1L2 101.8 1L3 101.8 N 101.8 PE
101.5 3L1
-102W0
BN BK GY BU GNYE
-102X0
-102Q0
3LD2504-0TK53
63A
Main switch
-102F0
5SY6363-6
B63
Main circuit breaker
-102F3
5SY6101-7
C1
-102HL3
3SU1156-6AA60-1AA0
Cabinet under voltage
-102F7
5SY6110-7
C10
-102F8
5SY6104-7
C4
-102Q5
5SV3311-6
TYP A, 16A
-102Q7
5SV3311-6
TYP A, 16A
-102W8
Rittal 2500.400
-102HL8.1
SZ 2500.300
Left cabinet light
-102W8.1
Rittal 2500.400
-102HL8
SZ 2500.300
Right cabinet light
-102X1
-102W1
-102XS5
5TE6803
Service socket
-102XS7
5TE6803
Servce socket
1L1 1L2 1L3
104.0 104.0 104.0
Robot_power

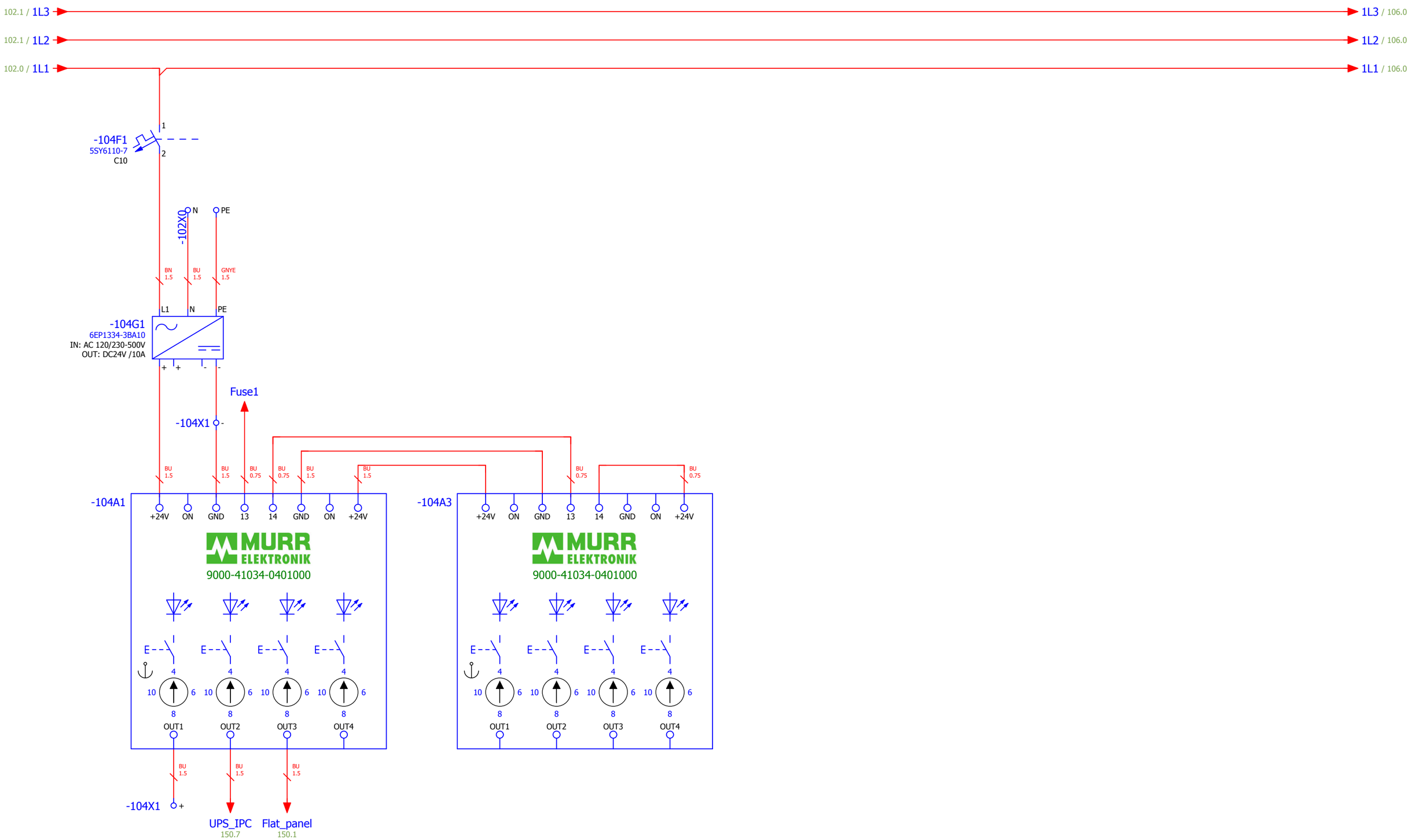

Tire surface inspection - lettering inspection
001_TSI_LI_development_DP
001

ME-Inspection SK
Drobneho 25 A
841 01 Bratislava / Slovakia

ME-INSPECTION SK
a MICRO-EPSILON company

Power part		=TSI_LI	Tire surface inspection - lettering inspection
		+RM1	Main cabinet
Modification date	18-Aug-20	Appr	
Changed by	MATUS KOLAROVIC	Form	

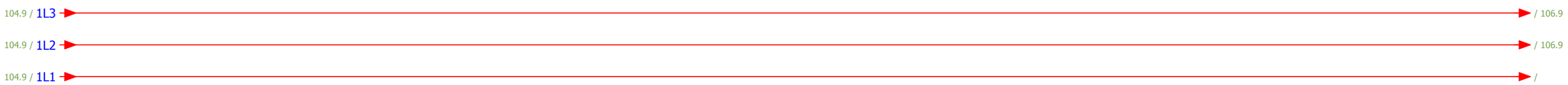
0
1
2
3
4
5
6
7
8
9
104.9 / 1L3
/ 106.9
104.9 / 1L2
/ 106.9
104.9 / 1L1
/

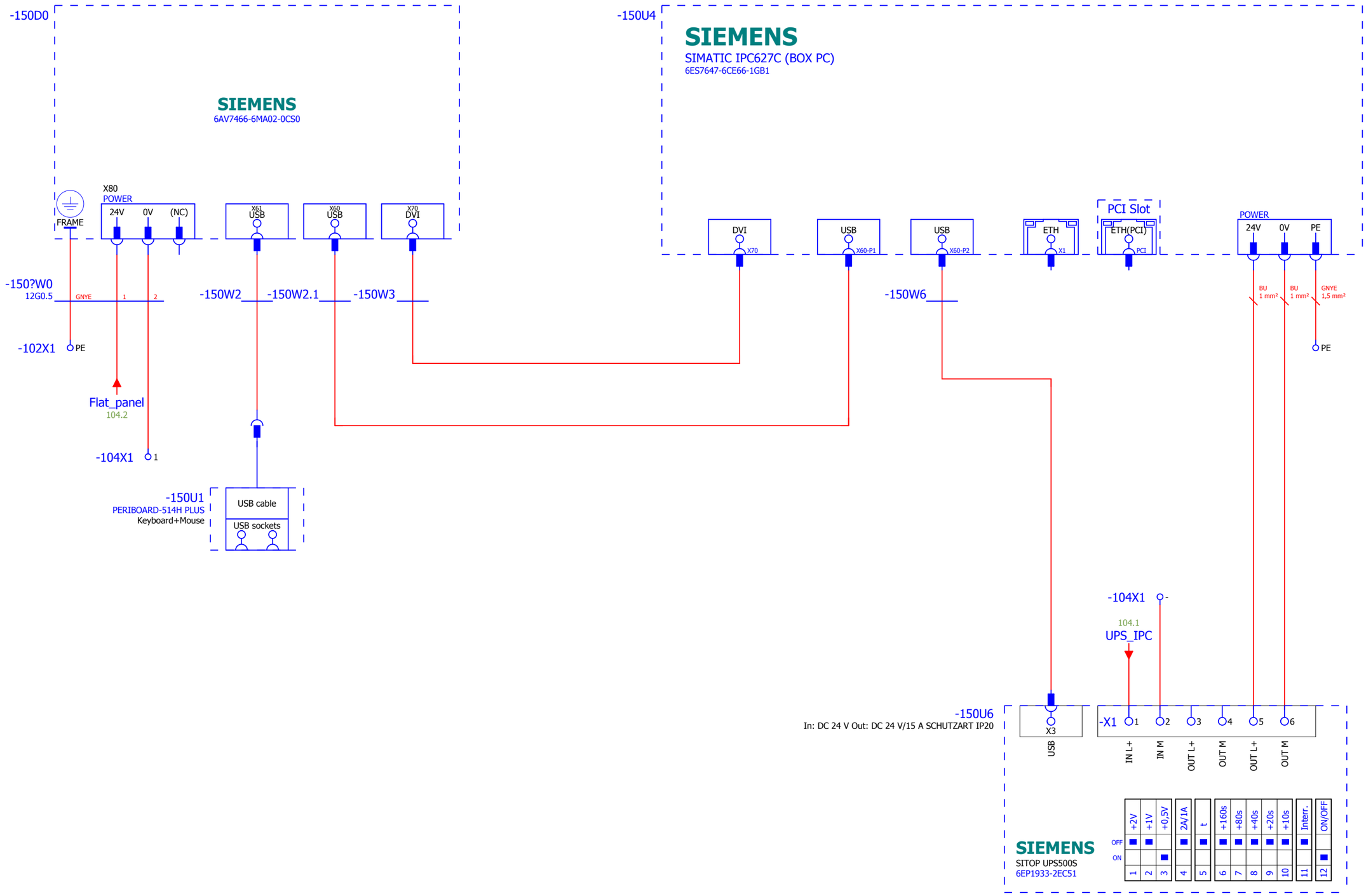
-150D0
SIEMENS
6AV7466-6MA02-0CS0
FRAME
X80
POWER
24V
0V
(NC)
X61
USB
X60
USB
X70
DVI
-150?W0
12G0.5
GNYE
1
2
-150W2
-150W2.1
-150W3
-102X1
PE
Flat_panel
104.2
-104X1
1
-150U1
PERIBOARD-514H PLUS
Keyboard+Mouse
USB cable
USB sockets
-150U4
SIEMENS
SIMATIC IPC627C (BOX PC)
6ES7647-6CE66-1GB1
DVI
X70
USB
X60-P1
USB
X60-P2
ETH
X1
PCI Slot
ETH(PCI)
PCI
POWER
24V
0V
PE
-150W6
BU
1 mm²
BU
1 mm²
GNYE
1,5 mm²
PE
-104X1
-
104.1
UPS_IPC
-150U6
In: DC 24 V Out: DC 24 V/15 A SCHUTZART IP20
X3
USB
-X1
1
2
3
4
5
6
IN L+
IN M
OUT L+
OUT M
OUT L+
OUT M
SIEMENS
SITOP UPS500S
6EP1933-2EC51
+2V
+1V
+0,5V
2A/1A
t
+160s
+80s
+40s
+20s
+10s
Interr.
ON/OFF
OFF
ON
1
2
3
4
5
6
7
8
9
10
11
12