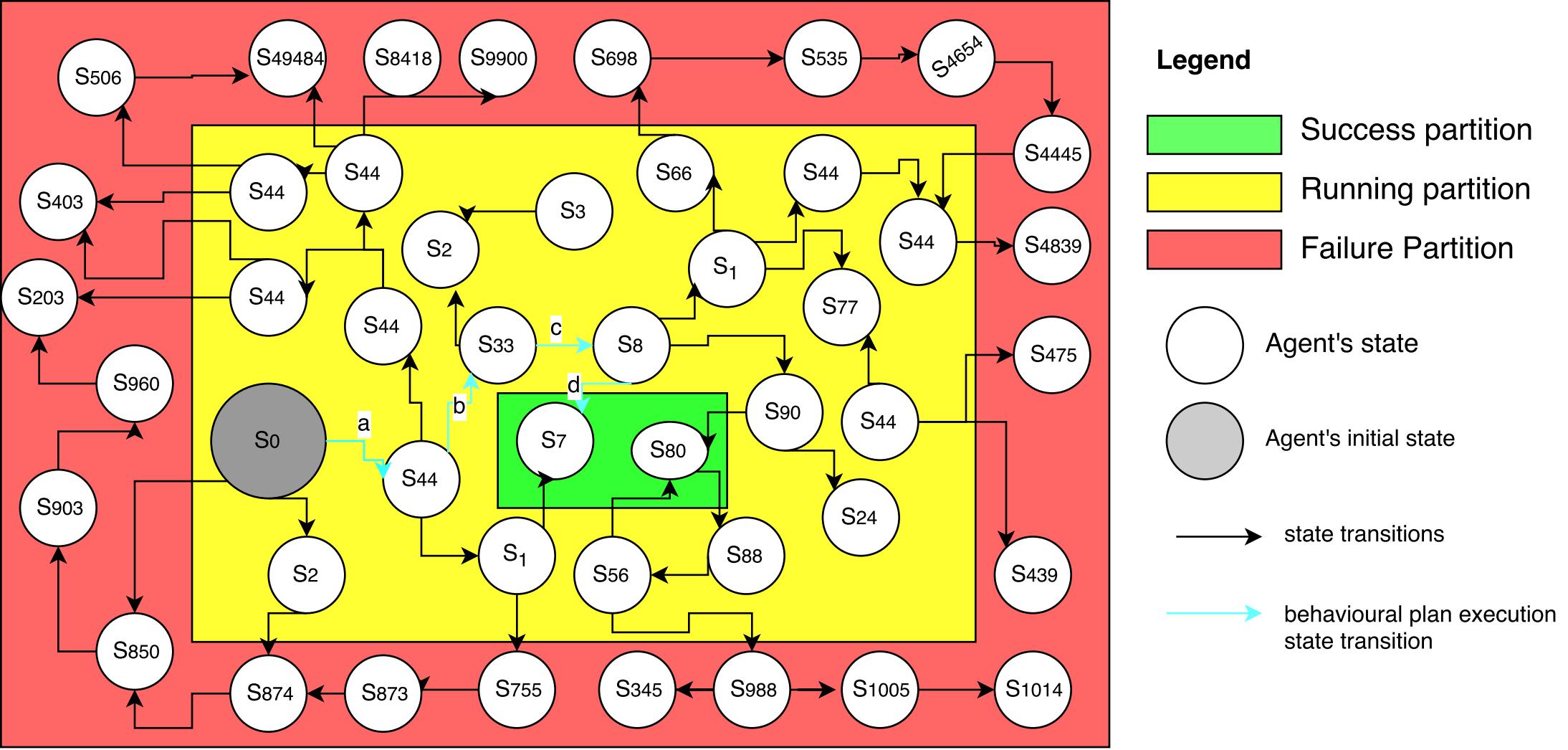
S506
S49484
S8418
S9900
S698
S535
S4654
S4445
S403
S44
S44
S66
S44
S3
S2
S1
S44
S4839
S203
S44
S44
S77
S33
c
S8
S475
S960
d
S90
S44
S0
a
b
S7
S80
S44
S903
S24
S2
S1
S56
S88
S439
S850
S874
S873
S755
S345
S988
S1005
S1014
Legend
Success partition
Running partition
Failure Partition
Agent's state
Agent's initial state
state transitions
behavioural plan execution
state transition