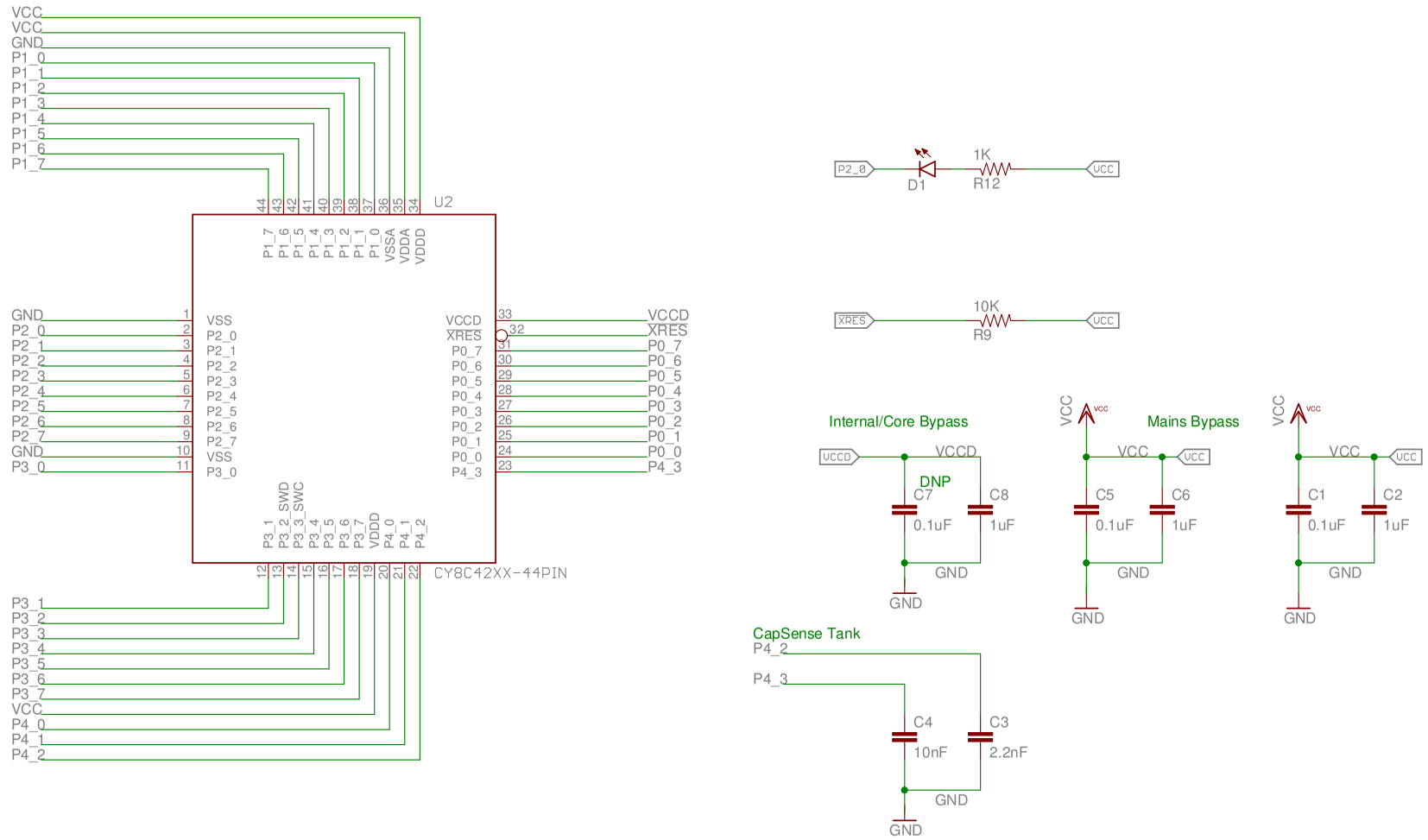

thingSoC

TITLE: TSOC_NEOLED

Document Number:

REV:

Date: 4/29/16 10:44 AM

Sheet: 1/1

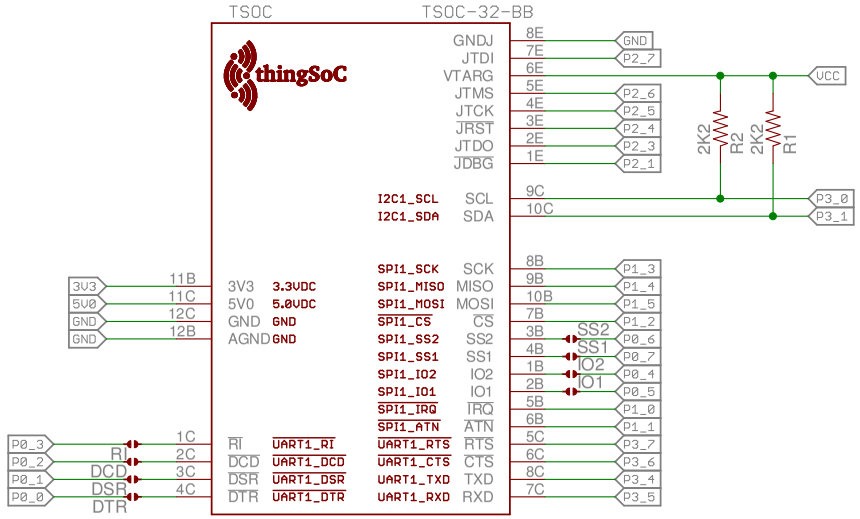

TSOC-PCB-PLUS

thingSoC

TITLE: TSOC_NEOLED

Document Number: REV:

Date: 4/29/16 10:44 AM Sheet: 1/1

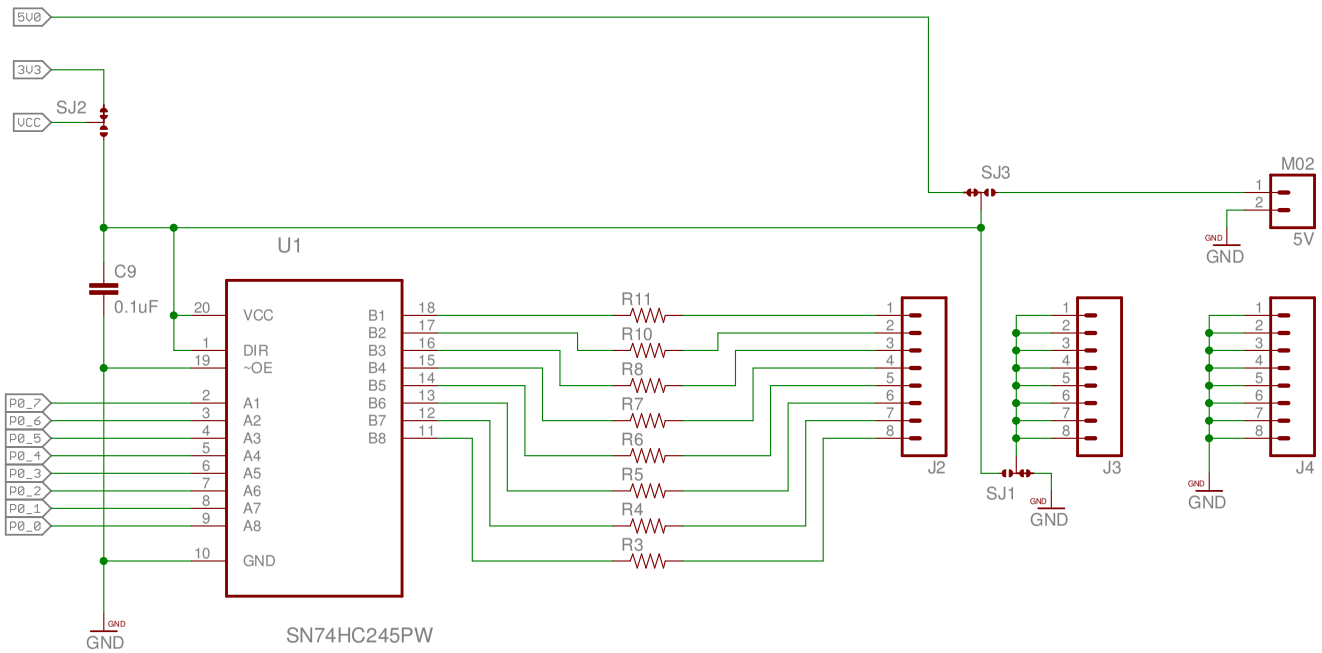

thingSoC

TITLE: TSOC_NEOLED

Document Number:

REV:

Date: 4/29/16 10:44 AM

Sheet: 1/1

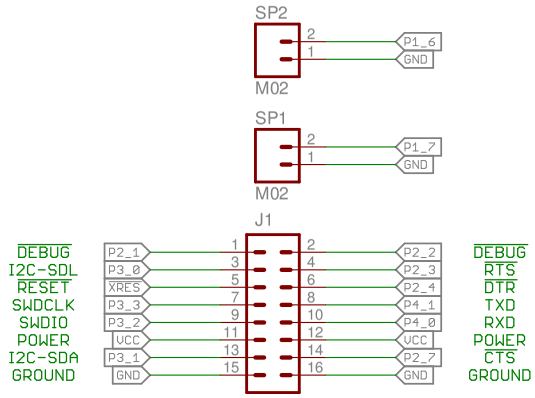

thingSoC

TITLE: TSOC_NEOLED

Document Number:

REV:

Date: 4/29/16 10:44 AM

Sheet: 1/1