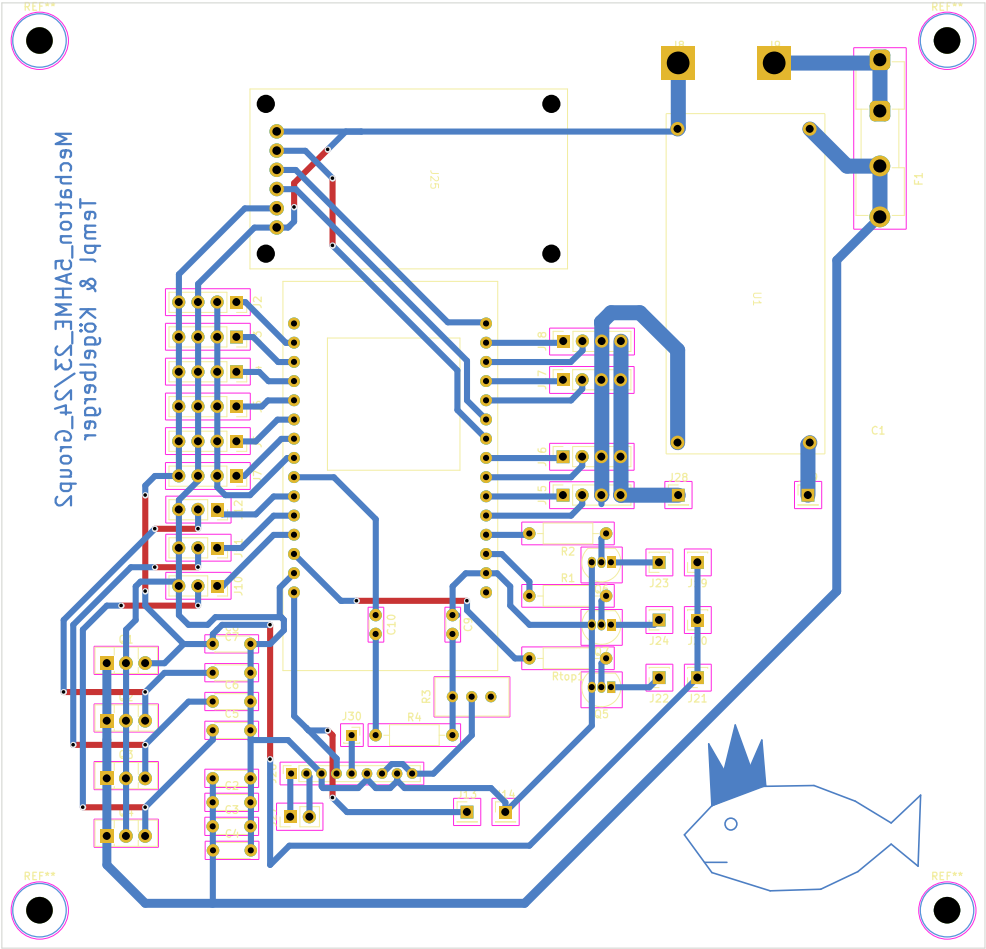

Sheet:
File: Mechatron_01.kicad_pcb

Title:

Size: A4	Date:	Rev:
KiCad E.D.A. kicad 7.0.6		Id: 1/1