How to Make a

Touch Guitar

It's easy to get started with the Touch Guitar built on cardboard with copper tape or aluminum foil. Computer speakers can be used to hear the sound output.

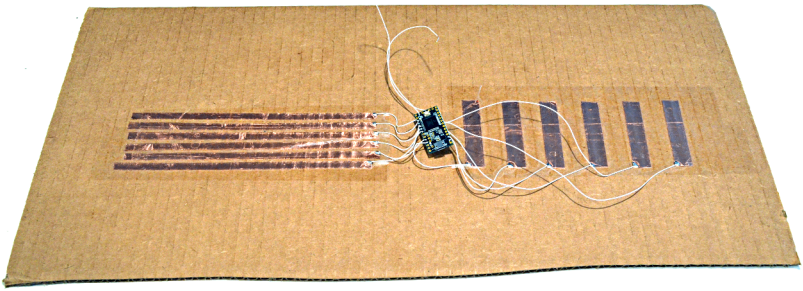

With any complex project, a simple but working prototype makes the long work of crafting a detailed case from wood or plastic much easier.

The capacitive touch sensing pins of Teensy 3.2 are used to detect when a person touches the foil string or frets. In Arduino, these work like analog pins, but they read capacitance with touchRead(). Connect each foil strip and then cover the foil with a thin layer of clear tape for protection.

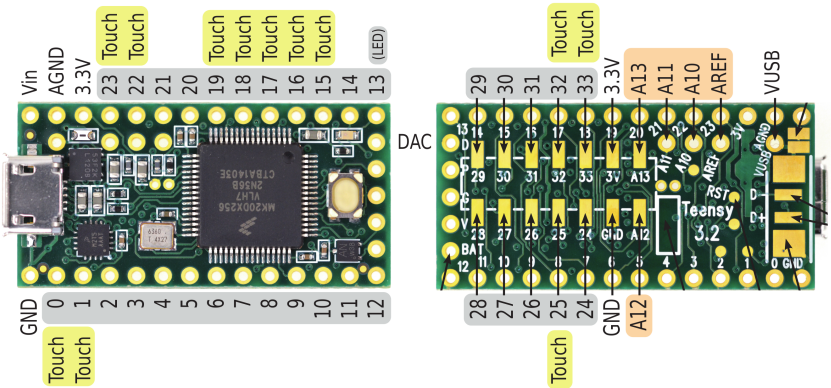

Capacitive touch requires grounding. If Teensy is connected to a desktop computer or laptop powered by a charger, it should automatically be earth grounded. For a battery powered guitar, add a ground surface with the musician will place their hand.

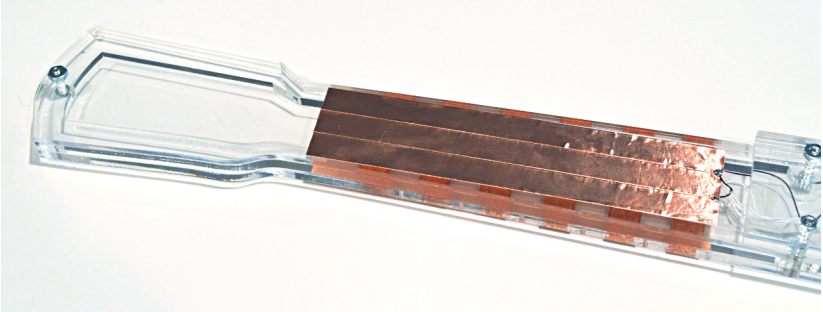

Sound comes out Teensy's DAC pin. Connect to an amplifier and speaker to hear. If an efficient “Class D” amplifier is used, the speaker and its wires must be kept away from the touch sensing.

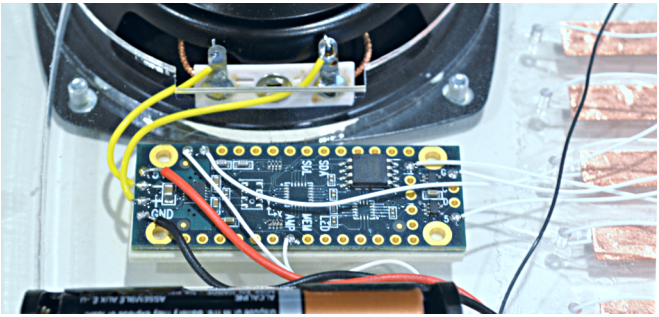

The complete Touch Guitar code to use with Arduino is available online.

http://github.com/PaulStoffregen/TouchGuitar