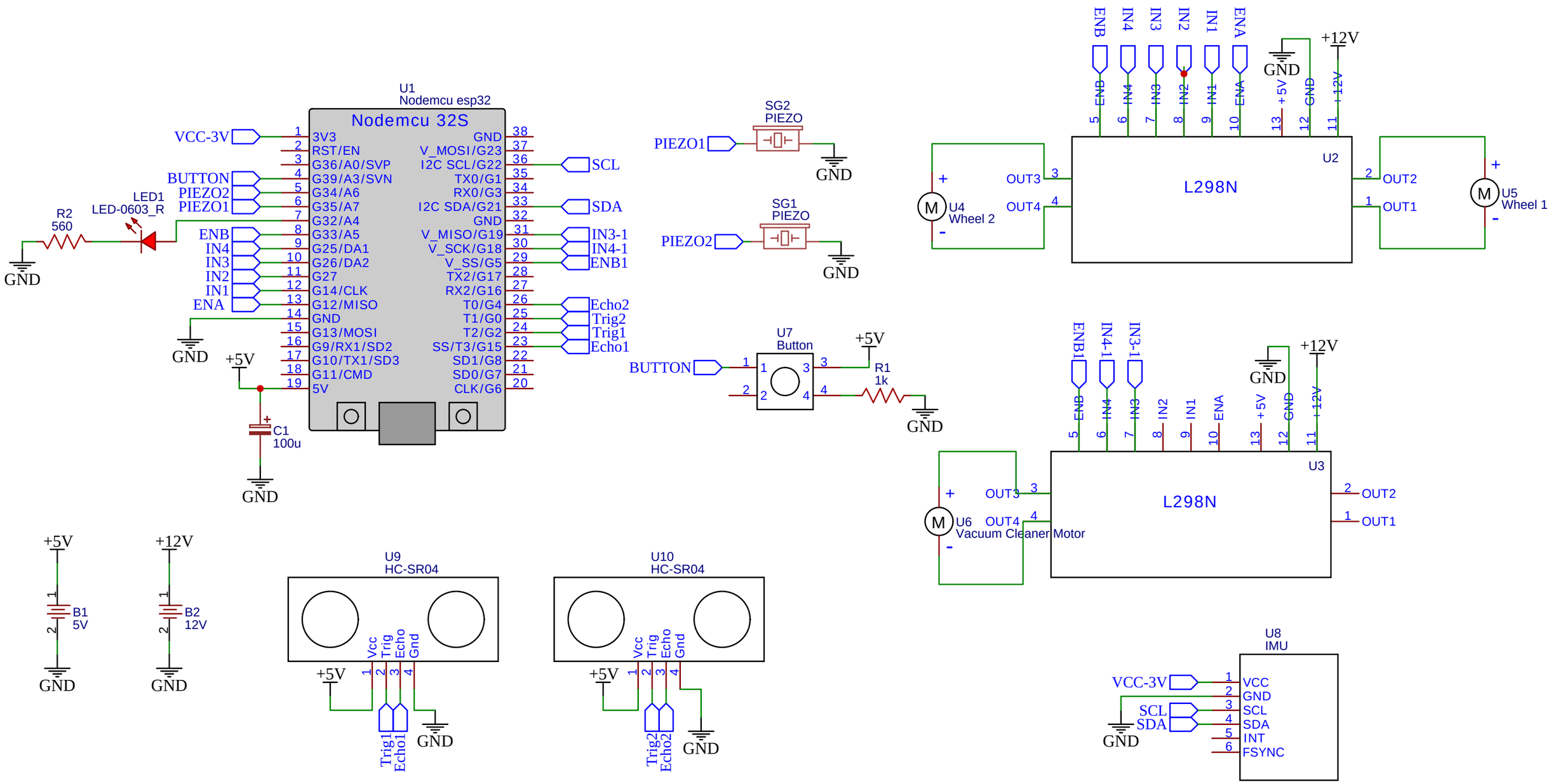

TITLE: Electronic Schematic		REV: 1.0
espol	Company: Escuela Superior Politécnica del Litoral	Sheet: 1/1
	Date: 2022-09-04 Drawn By: Group 7	