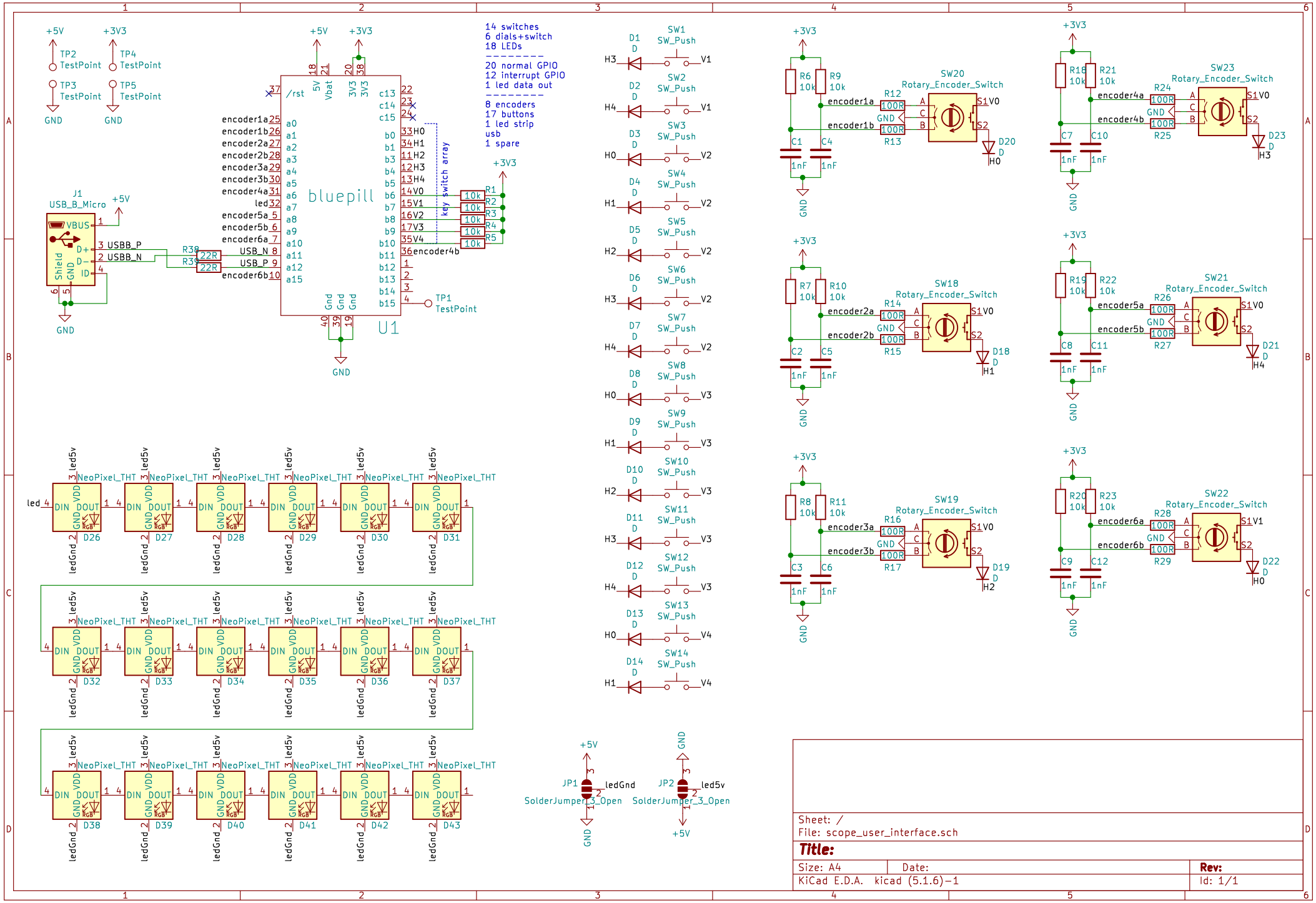
14 switches
6 dials+switch
18 LEDs
20 normal GPIO
12 interrupt GPIO
1 led data out
8 encoders
17 buttons
1 led strip
usb
1 spare
bluepill
U1
J1
USB_B_Micro
key switch array
SW1 SW_Push
SW2 SW_Push
SW3 SW_Push
SW4 SW_Push
SW5 SW_Push
SW6 SW_Push
SW7 SW_Push
SW8 SW_Push
SW9 SW_Push
SW10 SW_Push
SW11 SW_Push
SW12 SW_Push
SW13 SW_Push
SW14 SW_Push
SW18 Rotary_Encoder_Switch
SW19 Rotary_Encoder_Switch
SW20 Rotary_Encoder_Switch
SW21 Rotary_Encoder_Switch
SW22 Rotary_Encoder_Switch
SW23 Rotary_Encoder_Switch
NeoPixel_THT
JP1 SolderJumper_3_Open
JP2 SolderJumper_3_Open
Sheet: /
File: scope_user_interface.sch
Title:
Size: A4
Date:
Rev:
KiCad E.D.A. kicad (5.1.6)-1
Id: 1/1