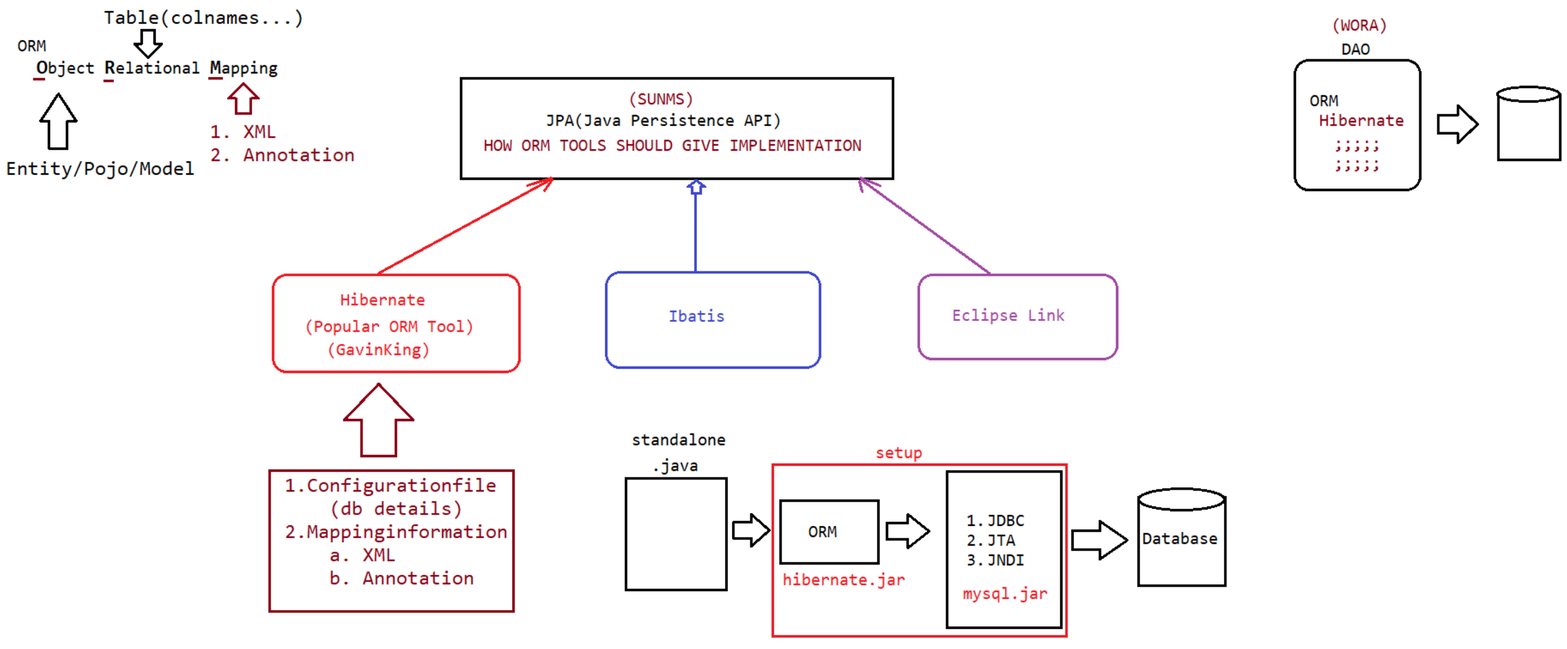

Hibernate Architecture:

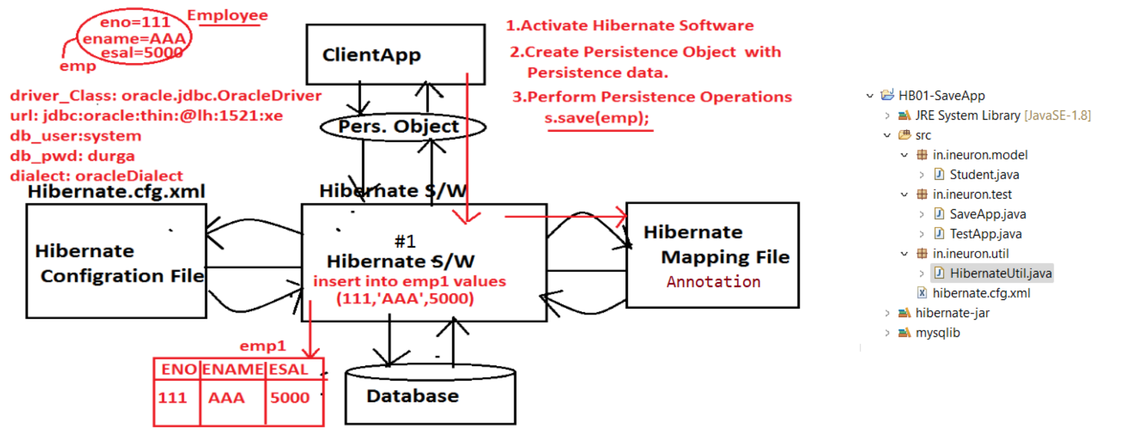

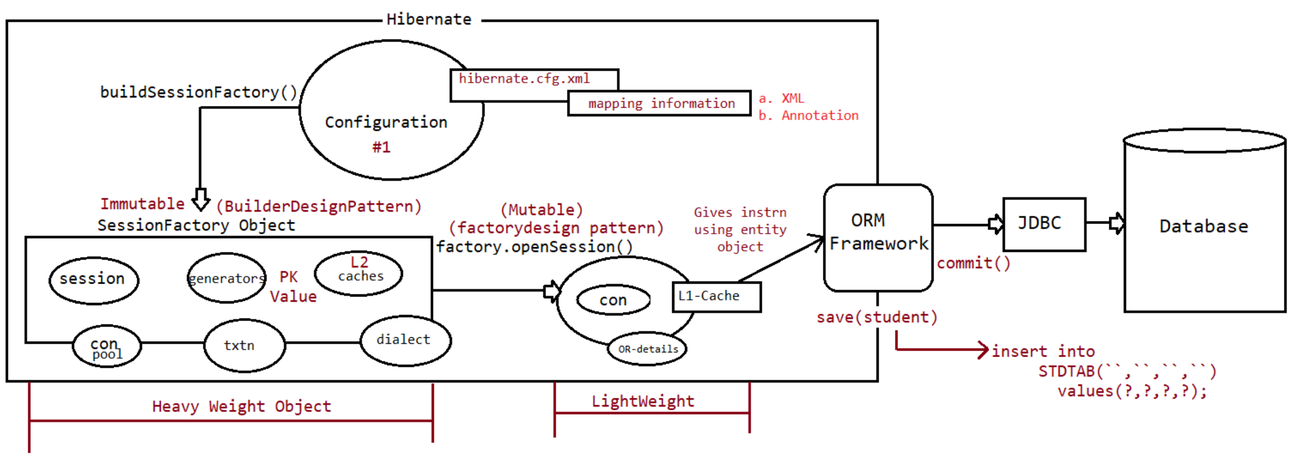


```
*> By default connection object present in connection pool autoCommit mode = false.
                 connection.setAutoCommit(false)

*> Any persistence operation of non-select type to be done we need to start the transaction
                Transaction transaction=session.beginTransaction(); //transaction.begin()

*> If transaction is succesfull, then perform commit operation otherwise perform rollback operation
                     transaction.commit() //con.commit()

                     transaction.rollback //con.rollback()
```