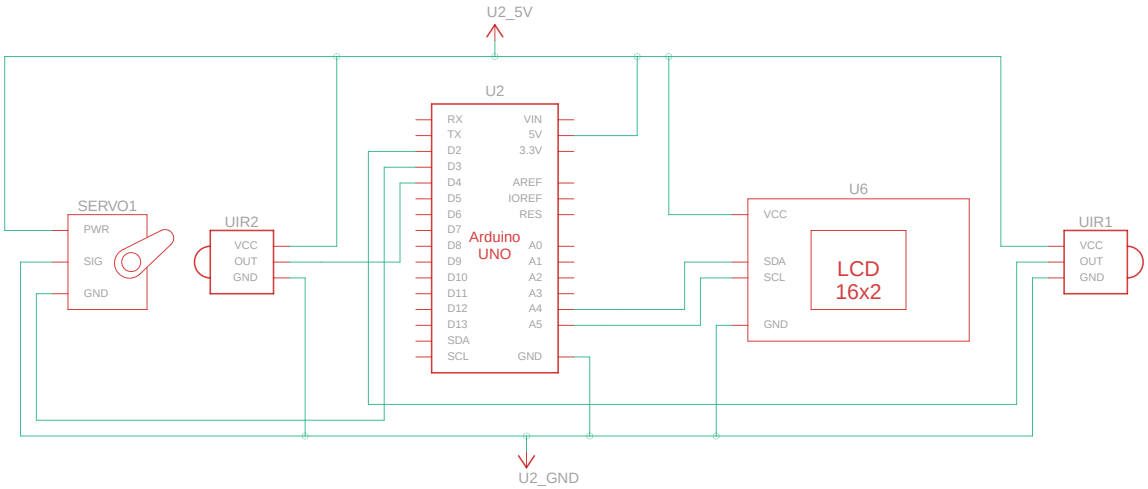

Made with Tinkercad®

Title: Smashing Kup	
Date: 10/8/2024, 11:36:50 PM	Sheet: 1/1