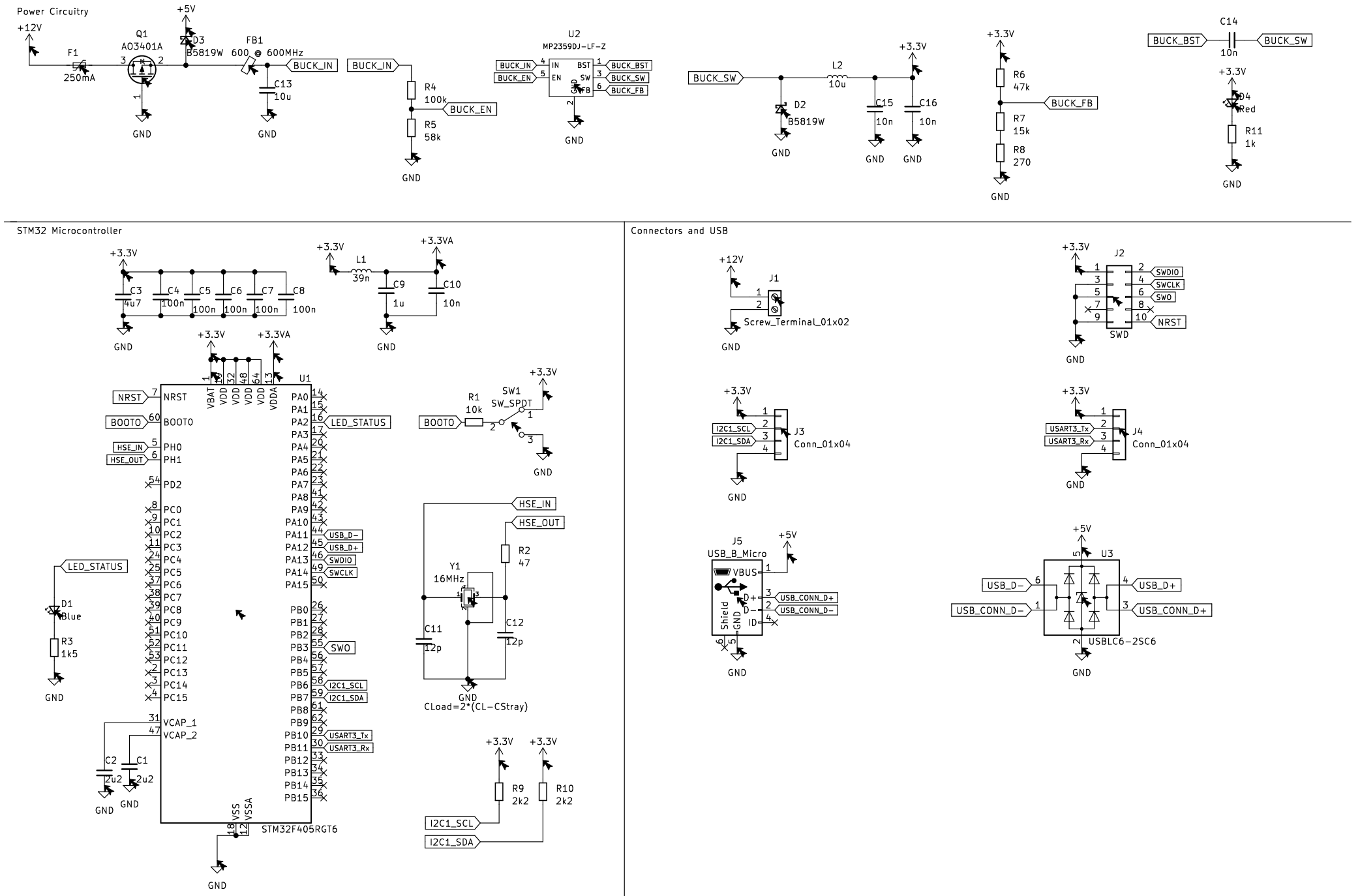
Power Circuitry
+12V
F1
250mA
Q1
AO3401A
+5V
D3
B5819W
FB1
600 @ 600MHz
BUCK_IN
C13
10u
GND
R4
100k
R5
58k
BUCK_EN
U2
MP2359DJ-LF-Z
IN
EN
BST
SW
FB
BUCK_BST
BUCK_SW
BUCK_FB
D2
B5819W
L2
10u
C15
10n
C16
10n
+3.3V
R6
47k
R7
15k
R8
270
C14
10n
D4
Red
R11
1k
STM32 Microcontroller
C3
4u7
C4
100n
C5
100n
C6
100n
C7
100n
C8
100n
L1
39n
C9
1u
C10
10n
+3.3VA
U1
NRST
BOOT0
HSE_IN
HSE_OUT
LED_STATUS
USB_D-
USB_D+
SWDIO
SWCLK
SWO
I2C1_SCL
I2C1_SDA
USART3_Tx
USART3_Rx
VBAT
VDD
VDDA
VCAP_1
VCAP_2
VSS
VSSA
STM32F405RGT6
D1
Blue
R3
1k5
C1
2u2
C2
2u2
R1
10k
SW1
SW_SPDT
Y1
16MHz
R2
47
C11
12p
C12
12p
CLoad=2*(CL-CStray)
R9
2k2
R10
2k2
Connectors and USB
J1
Screw_Terminal_01x02
J2
SWD
J3
Conn_01x04
J4
Conn_01x04
J5
USB_B_Micro
VBUS
D+
D-
ID
GND
Shield
USB_CONN_D+
USB_CONN_D-
U3
USBLC6-2SC6