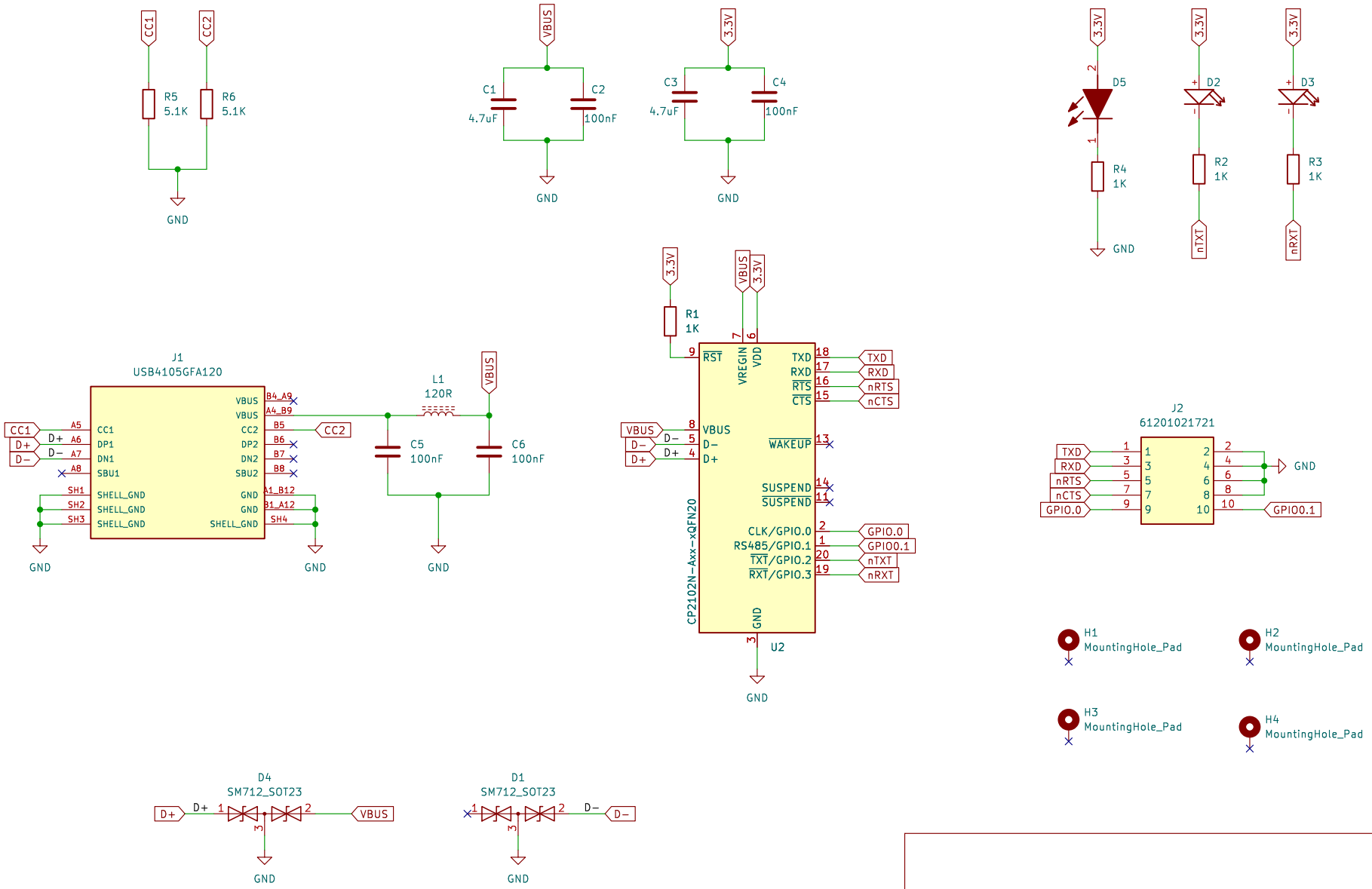

Sheet: /
File: USB_To_TTL.kicad_sch

Title: USB TO TTL v1.0

Size: A4	Date: 10-03-2024	**Rev: 1.0**
KiCad E.D.A. kicad 7.0.8		Id: 1/1