Computer Networks

Chapter 4: Medium Access Control

Prof. Xudong Wang

Wireless Networking and Artificial Intelligence Lab
UM-SJTU Joint Institute
Shanghai Jiao Tong University
Shanghai, China
http://wanglab.sjtu.edu.cn

Outline

- What is Medium Access Control?

- Medium Access Control Protocols
  - ALOHA
  - Carrier Sense Multiple Access Protocols
  - Collision-Free Protocols
  - Limited-Contention Protocols
  - Wavelength Division Multiple Access Protocols
  - Wireless LAN Protocols
- Medium Access Control in Various Networks
  - Ethernet
  - Wireless LANs (802.11)
  - WiMAX (802.16)
  - Bluetooth
  - Wireless PANs (IEEE 802.15)
- Data Link Switching and Bridging

Why Need Medium Access Control?

- Share the medium among users in a network with broadcast in nature
  - Networks using shared medium: radio over air; copper or coaxial cable
  - M users communicate by broadcasting into the same medium
- Key issue: How to share the medium?

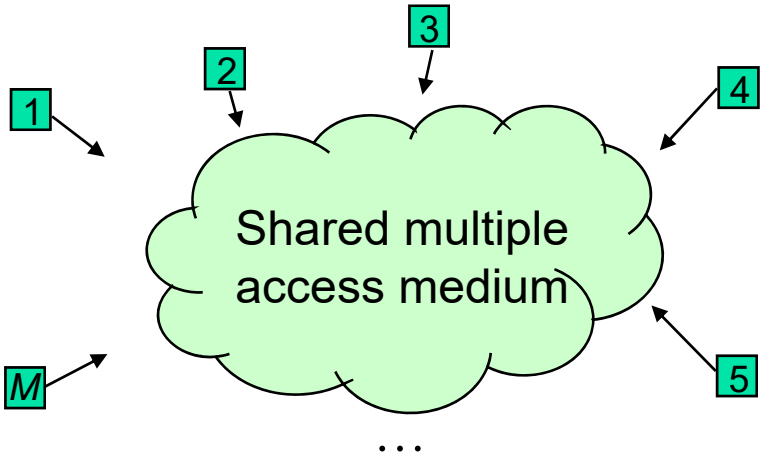

Notes on Several Confusing Terms

- Multiplexing
  - A node's local function or two nodes' point-to-point function
  - Examples: time division multiplexing (TDM), frequency division multiplexing (FDM), code division multiplexing, etc.
- Multiple Access
  - Function for multiple nodes' PMP/mesh (covers point-to-point case)
  - Examples: random access, time division multiple access (TDMA), frequency division multiple access (FDMA), code division multiple access (CDMA), orthogonal frequency division multiple access (OFDMA) etc.
- Medium Access Control
  - Algorithms or schemes controlling the medium access on top of a multiple access mechanism
  - Examples: Slotted Aloha, CSMA/CA, OFDMA MAC, TDMA MAC, CDMA MAC, etc.

Statistical Multiplexing & Random Access

- Multiplexing concentrates bursty traffic onto a shared line
- Packets are encapsulated in frames and queued in a buffer prior to transmission
- Central control allows variety of service disciplines

A B C is not involved in multiplexing

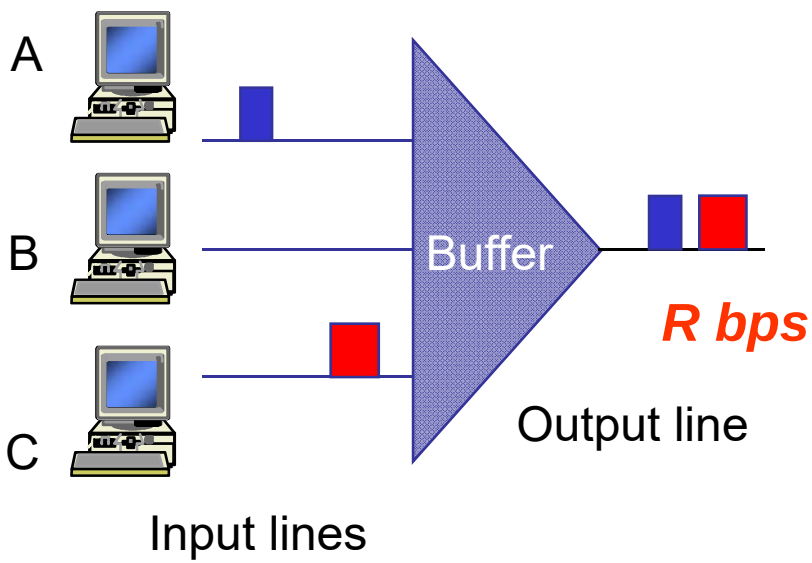

- MAC allows sharing of a broadcast medium
- Packets are encapsulated in frames and queued at station prior to transmission
- Decentralized control "wastes" bandwidth to allow sharing

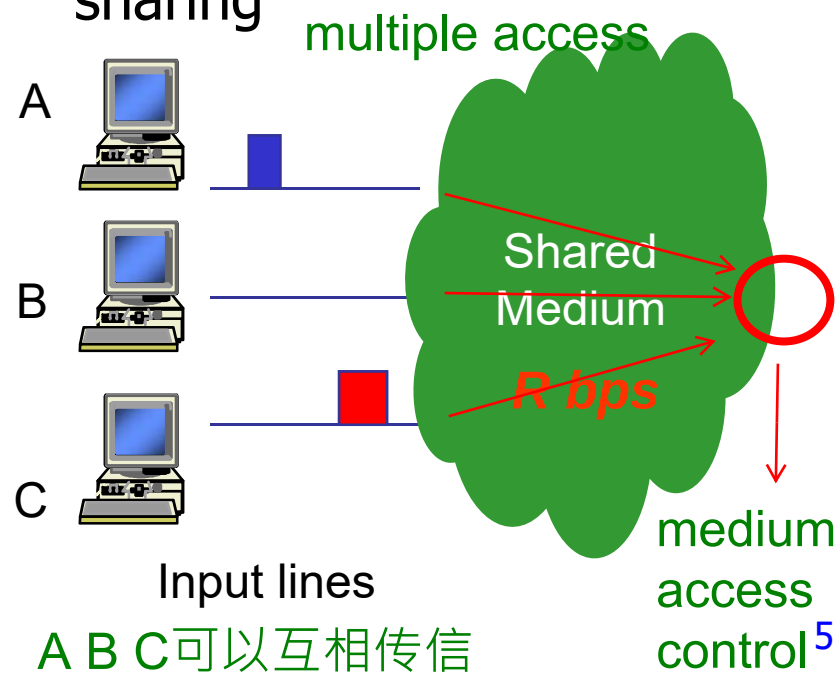

A B C可以互相传信

Approaches to Media Sharing

Medium sharing techniques

- Static channelization
- Dynamic medium access control
  - Scheduling
  - Random access

- Partition medium
- Dedicated allocation to users
- *Early* satellite transmission
- *Early* cellular Telephone

- Polling: take turns
- Request for slot in transmission schedule
- Token ring
- Cellular, satellite

- Loose coordination
- Send, wait, retry if necessary
- Aloha
- Ethernet

Medium Access Control Protocols

layer2 : data link layer

multiplexing / multiple access : layer 1 , physical layer

Selecting a Medium Access Control

- Applications
  - What type of traffic?
  - Voice streams? Steady traffic, low delay/jitter
  - Data? Short messages? Web page downloads?
  - Enterprise or Consumer market? Reliability, cost
- Scale
  - How much traffic can be carried?
  - How many users can be supported?

MAC Protocol Features

- Bandwidth-delay product (BDP)
- Efficiency
- Transfer delay
- Fairness
- Reliability
- Capability to carry different types of traffic
- Quality of service
- Cost

Channelization

Multiple Access and Channelization (1)

- Channelization
  - Semi-static bandwidth allocation of portion of shared medium to a given user
  - Highly efficient for constant-bit rate traffic
  - Preferred approach in
    - Cellular telephone networks
    - Terrestrial & satellite broadcast radio & TV
- Shortcomings
  - Inflexible in allocation of bandwidth to users with different requirements
  - Inefficient for bursty traffic 集送数据的
  - Does not scale well to large numbers of users
    - Average transfer delay increases with number of users M
  - Dynamic MAC much better at handling bursty traffic

Multiple Access and Channelization (2)

- *Frequency Division Multiple Access* (FDMA)
  - Frequency band allocated to users
  - Broadcast radio & TV, analog cellular phone
- *Time Division Multiple Access* (TDMA)
  - Periodic time slots allocated to users
  - Telephone backbone, GSM digital cellular phone
- *Code Division Multiple Access* (CDMA)
  - Code allocated to users
  - Cellular phones, 3G cellular

FDMA Channelization

- Divide channel into *M* frequency bands
- Each station transmits and listens on assigned bands
- Each station transmits at most *R/M* bps
- Good for stream traffic; Used in connection-oriented systems
- Inefficient for bursty traffic

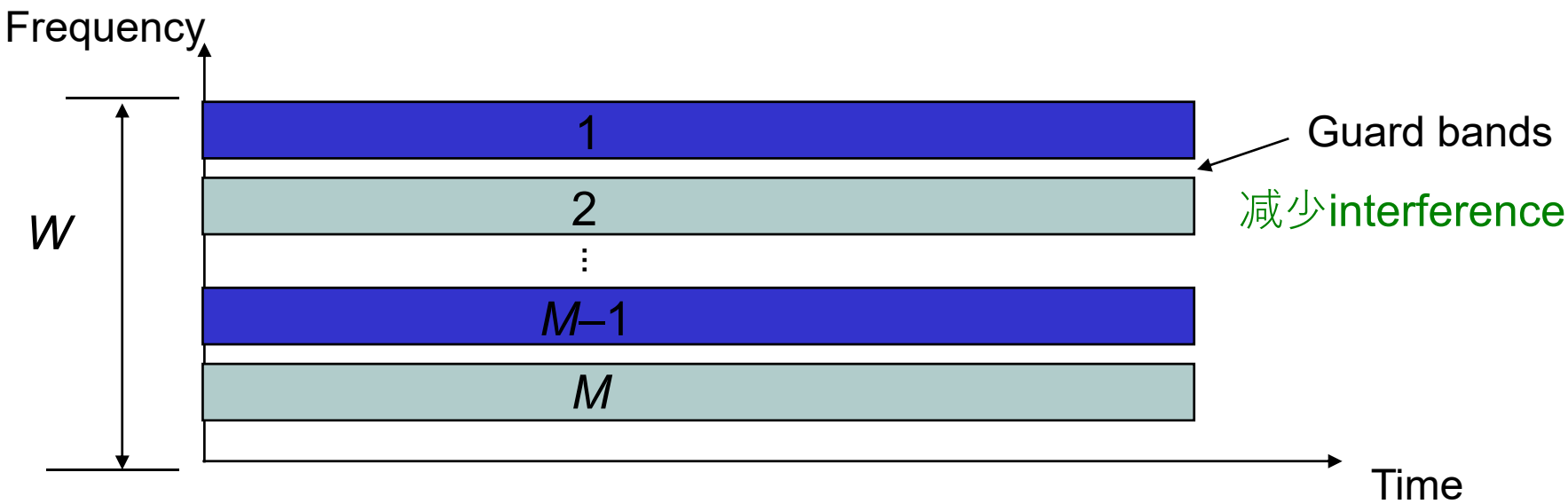

TDMA Channelization

- Dedicate 1 slot per station in transmission cycles
- Stations transmit data burst at full channel bandwidth
- Each station transmits at R bps 1/M of the time
- Excellent for stream traffic; Used in connection-oriented systems
- Inefficient for bursty traffic due to unused dedicated slots

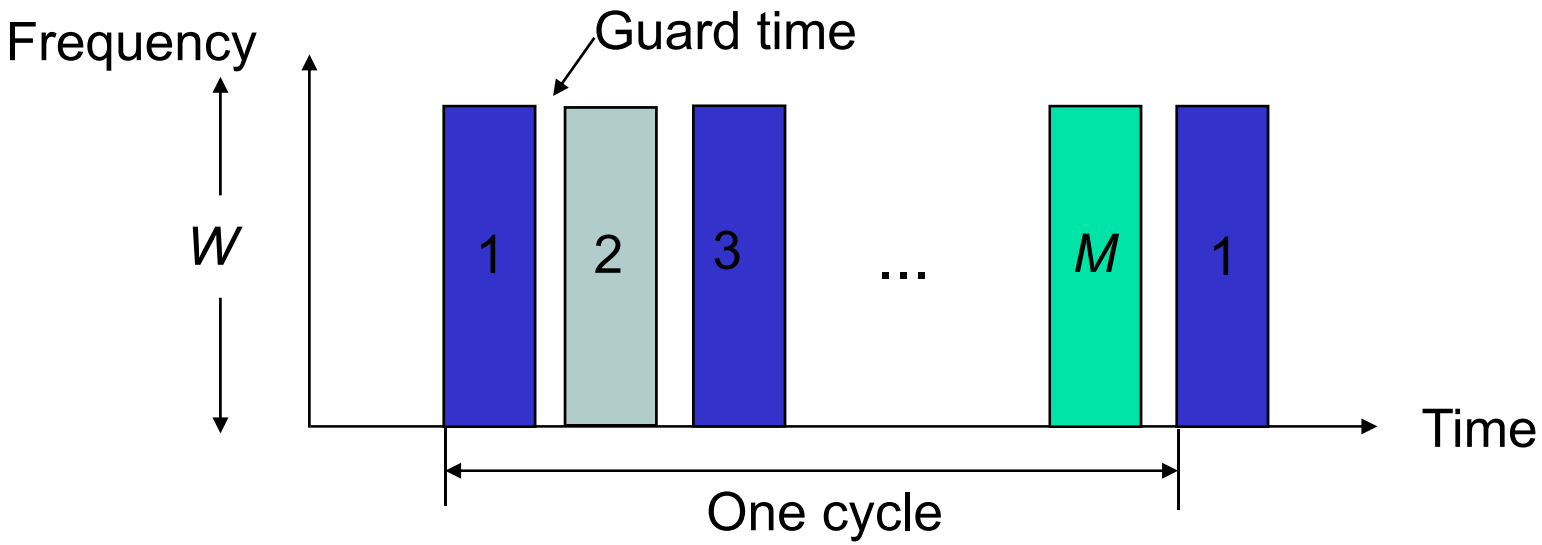

不同的用户在不同的time slot发送数据

Guardbands

- FDMA
  - Frequency bands must be non-overlapping to prevent interference
  - Guardbands ensure separation; form of overhead
- TDMA
  - Stations must be synchronized to common clock
  - Time gaps between transmission bursts from different stations to prevent collisions; form of overhead
  - Must take into account propagation delays

CDMA Channelization

- Code Division Multiple Access
  - Channels determined by a code used in modulation and demodulation
- Stations transmit over entire frequency band all of the time!

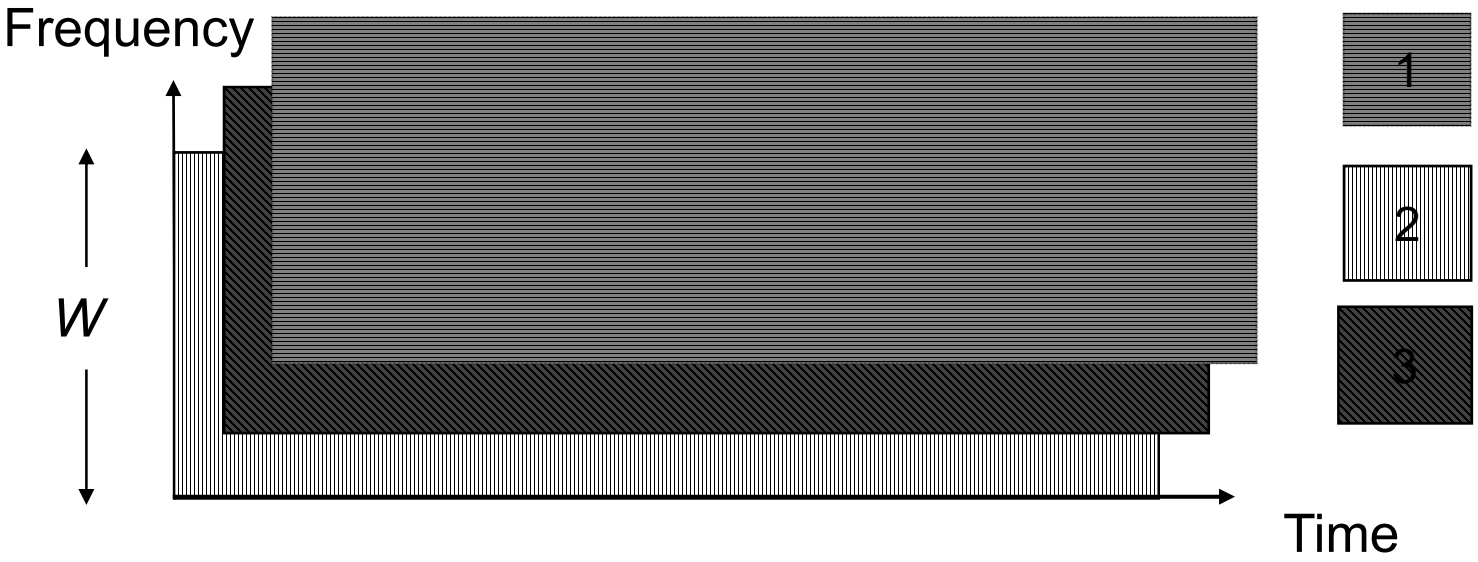

Channelization in Code Space

- Each channel uses a different pseudorandom code
- Codes should have low cross-correlation
  - If they differ in approximately half the bits the correlation between codes is close to zero and the effect at the output of each other's receiver is small
- As the number of users increases, effect of other users on a given receiver increases as additive noise
- CDMA has gradual increase in BER due to noise as number of users is increased
- Interference between channels can be eliminated if codes are selected so they are *orthogonal* and if receivers and transmitters are synchronized
  - Shown in next example

CDMA Example: 3 users

- Assume three users share same medium
- Users are synchronized & use different 4-bit orthogonal codes: {-1,-1,-1,-1}, {-1, +1,-1,+1}, {-1,-1,+1,+1}, {-1,+1,+1,-1},

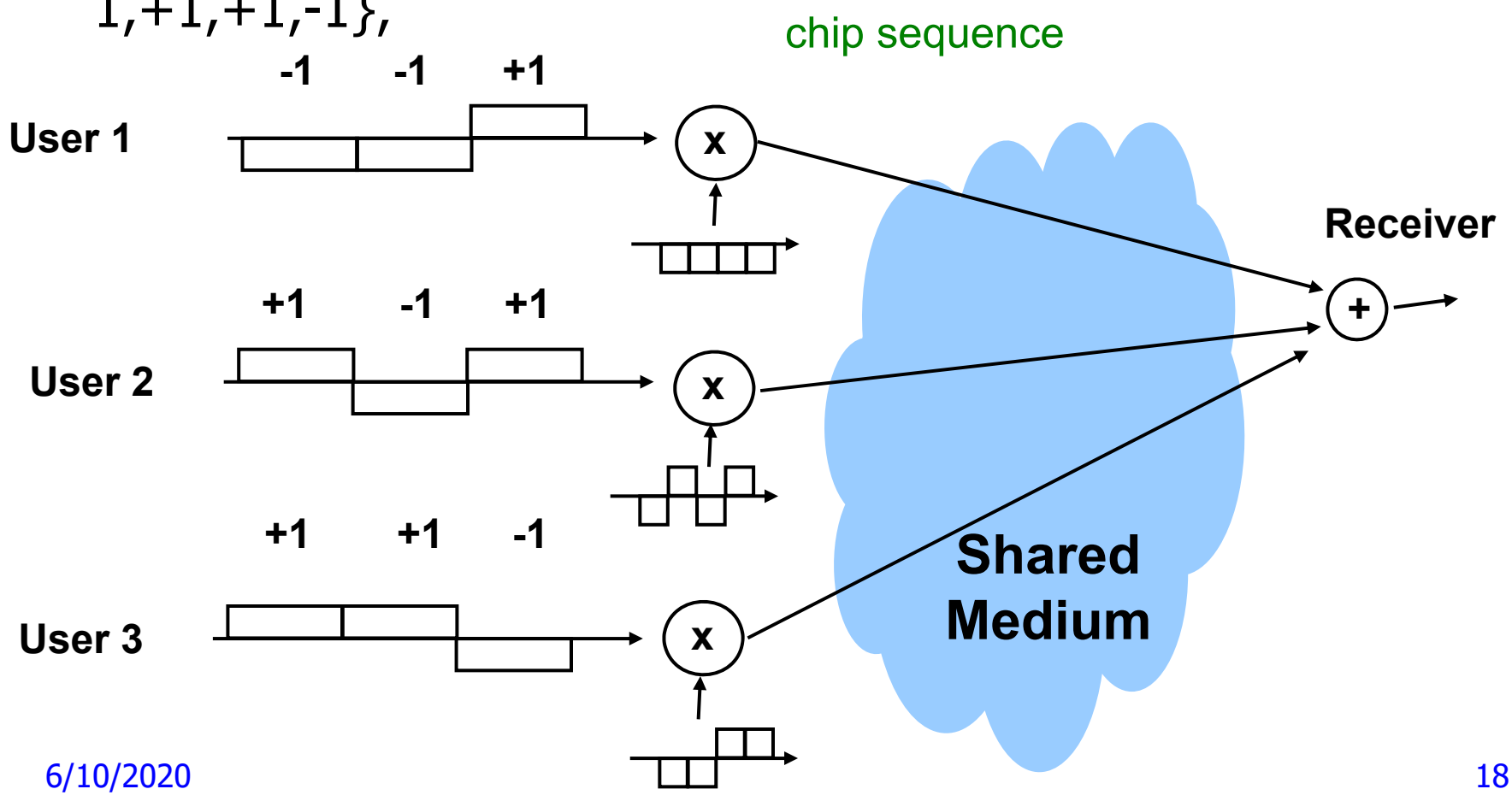

Sum signal is input to receiver

1 1 0

- **Channel 1: 110 -> +1+1-1 -> (-1,-1,-1,-1),(-1,-1,-1,-1),(+1,+1,+1,+1)**
- **Channel 2: 010 -> -1+1-1 -> (+1,-1,+1,-1),(-1,+1,-1,+1),(+1,-1,+1,-1)**
- **Channel 3: 001 -> -1-1+1 -> (+1,+1,-1,-1),(+1,+1,-1,-1),(-1,-1,+1,+1)**
- **Sum Signal: (+1,-1,-1,-3),(-1,+1,-3,-1),(+1,-1,+3,+1)**

三个加起来

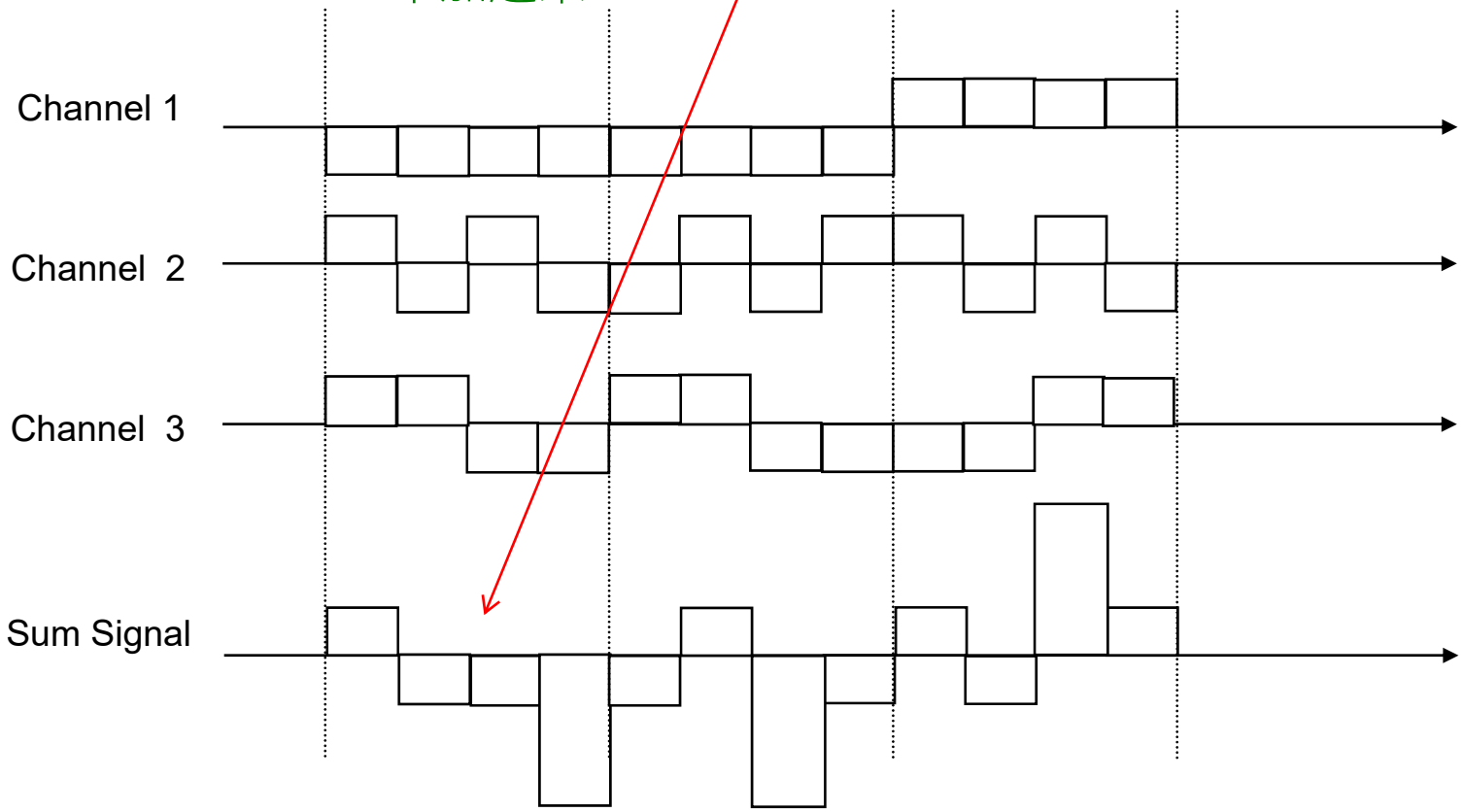

Receiver for Station 2

- Each receiver takes sum signal and integrates by code sequence of desired transmitter
- Integrate over T seconds to smooth out noise

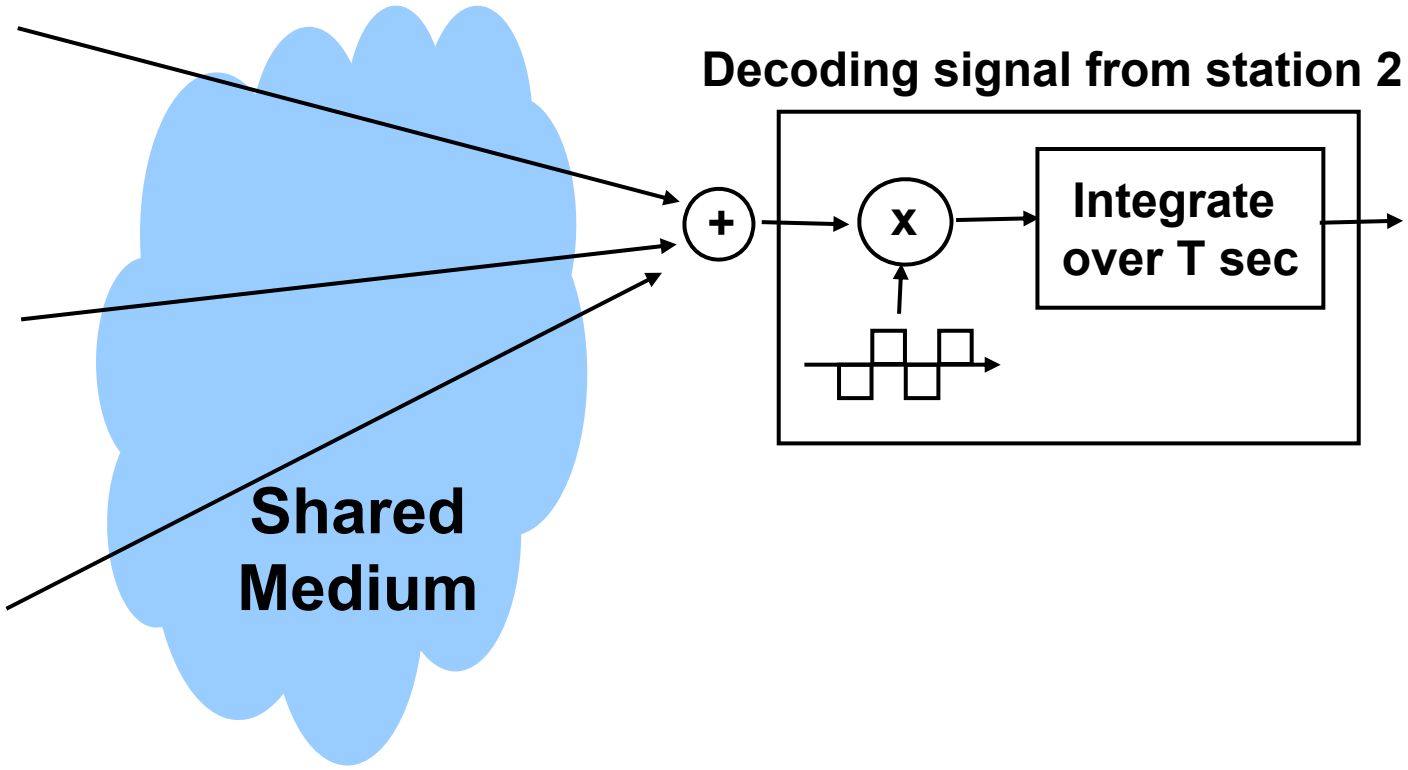

Decoding at Receiver 2

- Sum Signal: (+1,-1,-1,-3),(-1,+1,-3,-1),(+1,-1,+3,+1)
- Channel 2 Sequence: (-1,+1,-1,+1),(-1,+1,-1,+1),(-1,+1,-1,+1)
- Correlator Output: (-1,-1,+1,-3),(+1,+1,+3,-1),(-1,-1,-3,+1)
- Integrated Output: -4, +4, -4
- Binary Output: 0, 1, 0

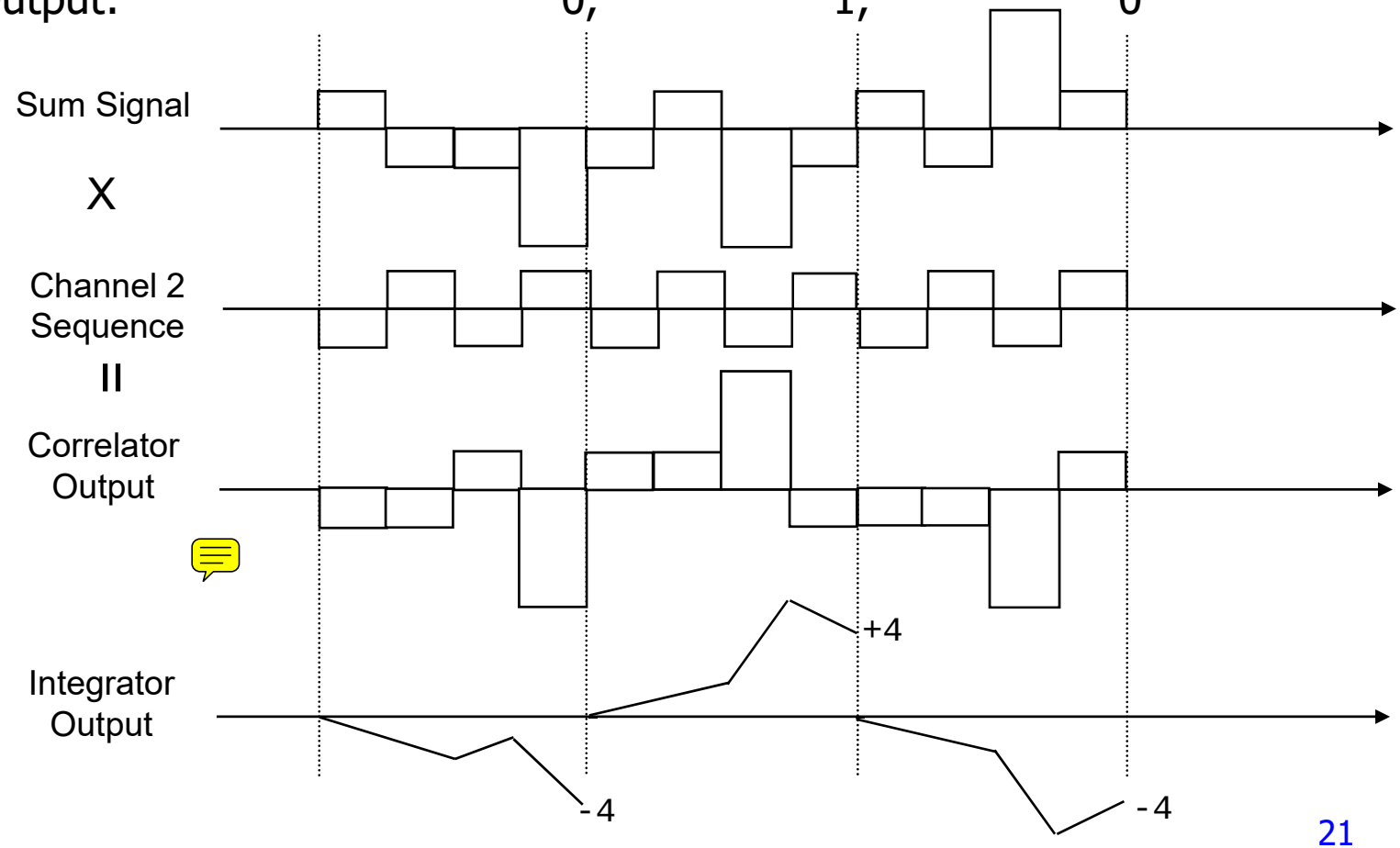

Channelization Example: Cellular Telephone Networks

- Cellular networks use frequency reuse
  - Band of frequencies reused in other cells that are sufficiently far so that interference is not a problem
  - Cellular networks provide voice connections which is steady stream
- FDMA used in AMPS
- TDMA used in IS-54 and GSM
- CDMA used in IS-95

Random Access

Random Access: ALOHA

- Wireless link to provide data transfer between main campus & remote campuses of University of Hawaii
- Simplest solution
  - A station transmits whenever it has data to transmit
  - If more than one frames are transmitted, they interfere with each other (collide) and are lost
  - If ACK not received within timeout, then a station picks random backoff time (to avoid repeated collision)
  - Station retransmits frame after backoff time

如果有别的frame在这段时间发送，会和这个collide

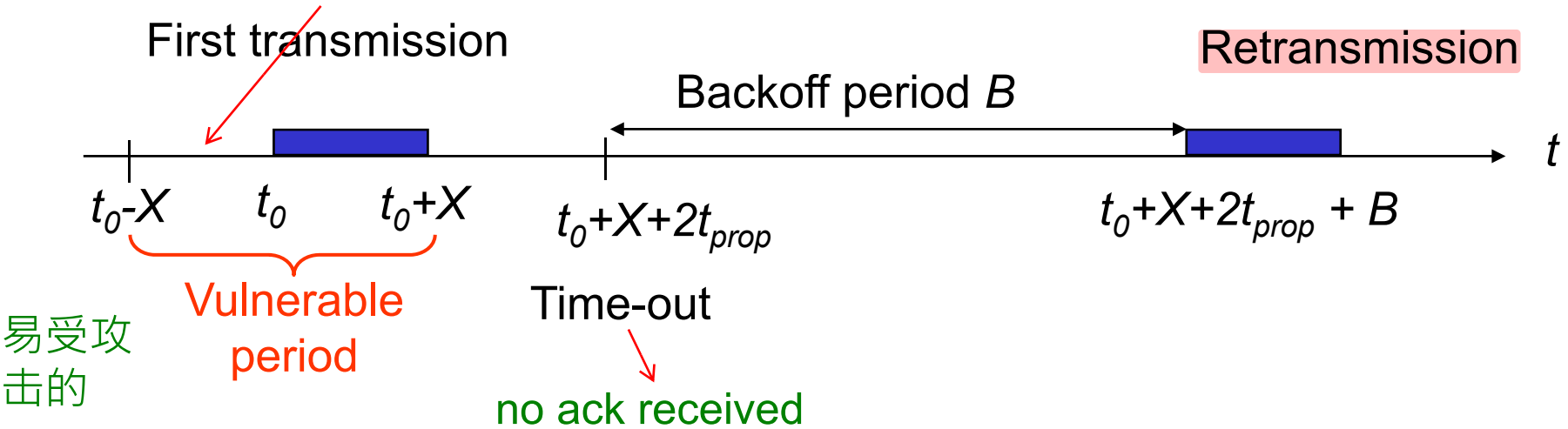

易受攻击的

ALOHA Model

- Definitions and assumptions
  - X : frame transmission time (assume constant)
  - S: throughput (average # successful frame transmissions per X seconds)
  - G: load (average # transmission attempts per X sec.)
  - $P_{success}$: probability a frame transmission is successful

$$S = GP_{success}$$

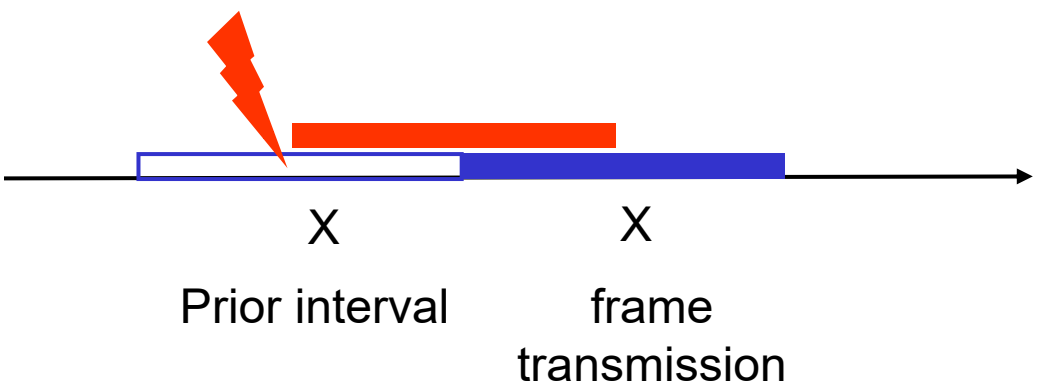

- Any transmission that begins during vulnerable period leads to collision
- Success if no arrivals during 2X seconds

Abramson's Assumption

- *What is the probability of no arrivals in vulnerable period?*
- **Abramson assumption**: ***Effect of backoff algorithm*** *(and retransmission)* ***is that frame arrivals are equally likely to occur at any time interval***
- *G* is avg. # arrivals per *X* seconds
- Divide *X* into *n* intervals of duration $\Delta = X/n$
- *p* = probability of arrival in Δ interval, then

  $G = n\,p$ since there are *n* intervals in *X* seconds

$$P_{success} = P[0 \text{ arrivals in } 2X \text{ seconds}] =$$

$$= P[0 \text{ arrivals in } 2n \text{ intervals}]$$

$$= (1-p)^{2n} = (1-\frac{G}{n})^{2n} \rightarrow e^{-2G} \text{ as } n \rightarrow \infty$$

Throughput of ALOHA

- Collisions are means for coordinating access
- Max throughput is $\rho_{max} = 1/2e$ *(18.4%)*
- Bimodal behavior:
  Small G, S≈G
  Large G, S →0
- Collisions can snowball and drop throughput to zero

$$S = GP_{success} = Ge^{-2G}$$

max(s)=1

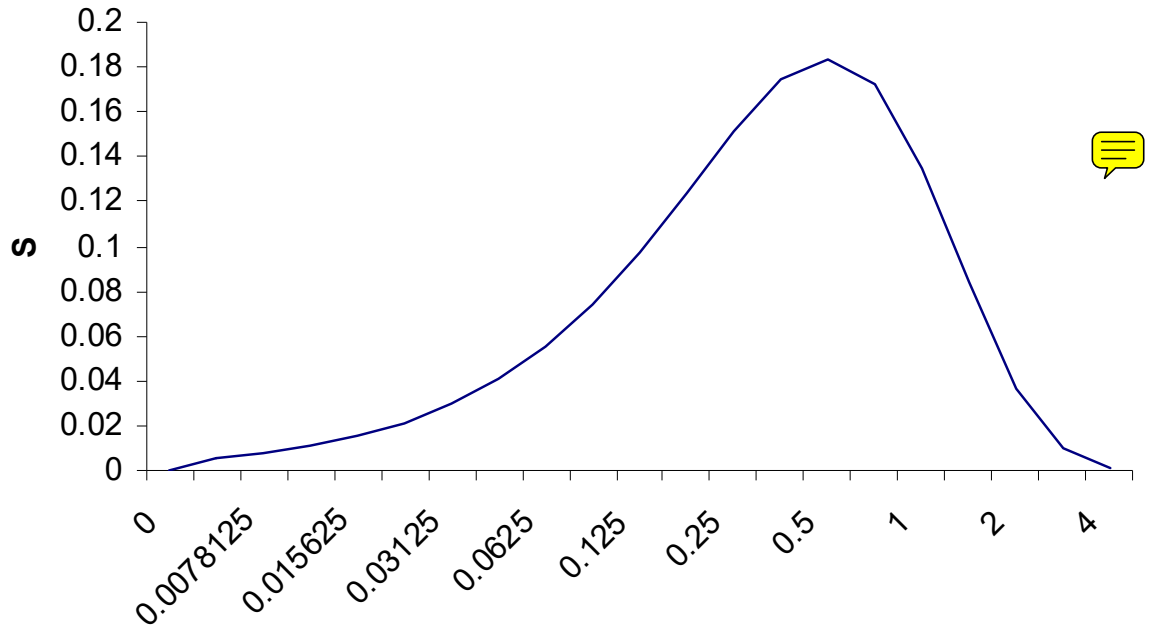

Slotted ALOHA

- Time is slotted in X seconds slots
- Stations are ***synchronized*** to frame times
- Stations transmit frames in first slot after frame arrival
- Backoff intervals in multiple slots

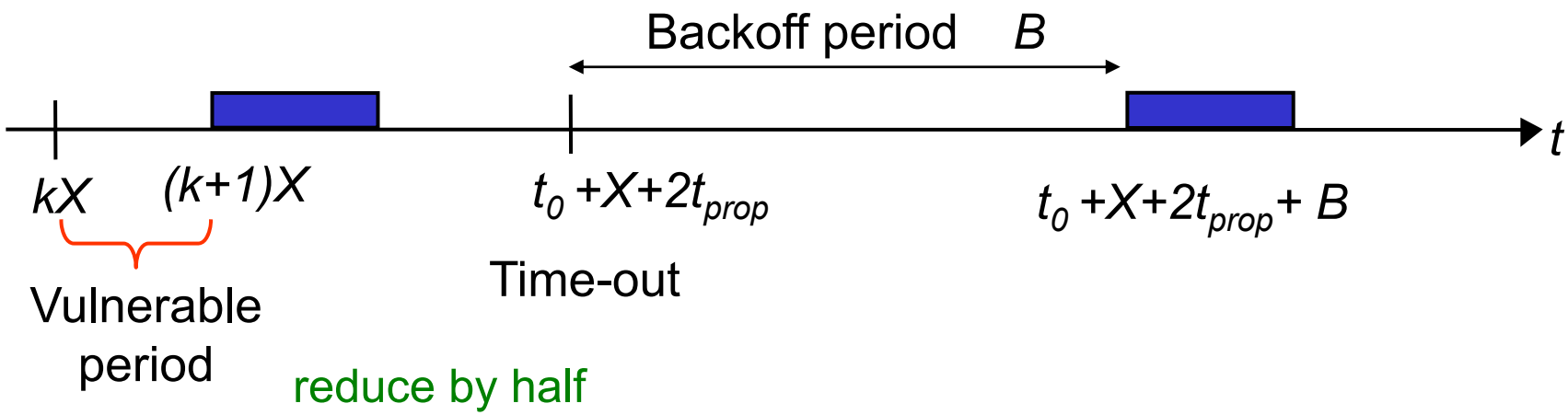

Only frames that arrive during prior X seconds collide

Throughput of Slotted ALOHA

$$S = GP_{success} = GP[\text{no arrivals in X seconds}]$$

$$= GP[\text{no arrivals in n intervals}]$$

traffic load increased

$$= G(1-p)^n = G(1-\frac{G}{n})^n \rightarrow Ge^{-G}$$

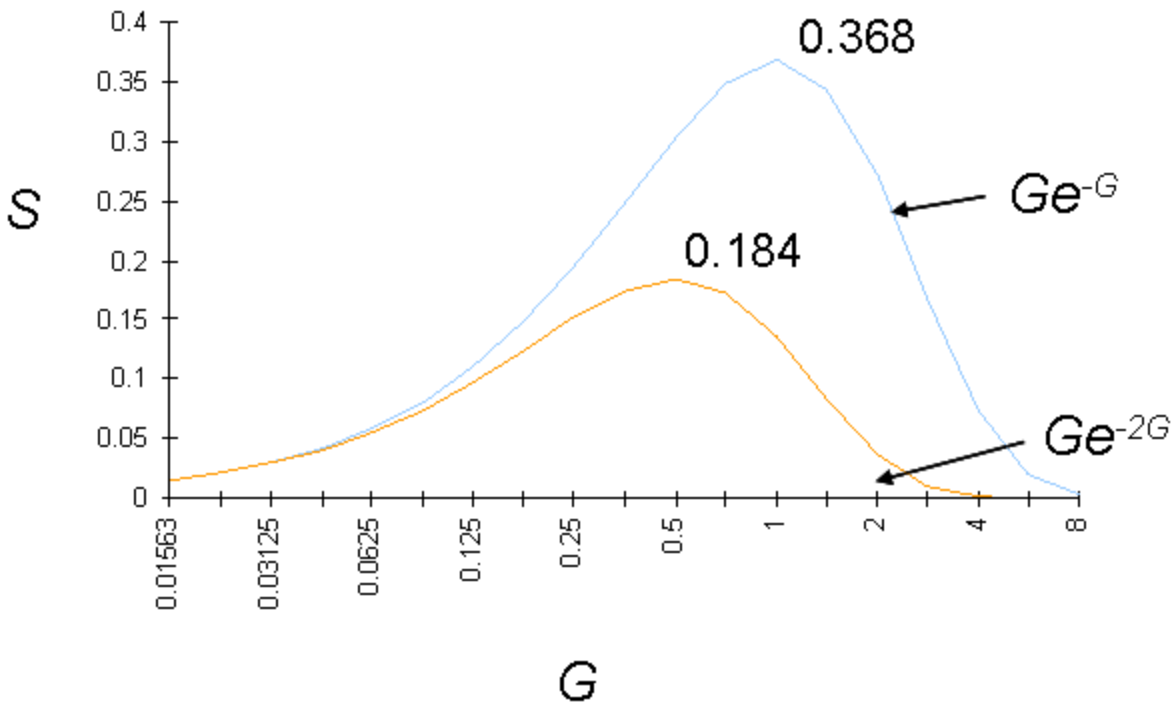

Application of Slotted Aloha

- Reservation protocol allows a large number of stations with infrequent traffic to reserve slots to transmit their frames in future cycles
- Each cycle has mini-slots allocated for making reservations (i.e. for sending request/response messages)
- Stations use slotted Aloha during mini-slots to request slots

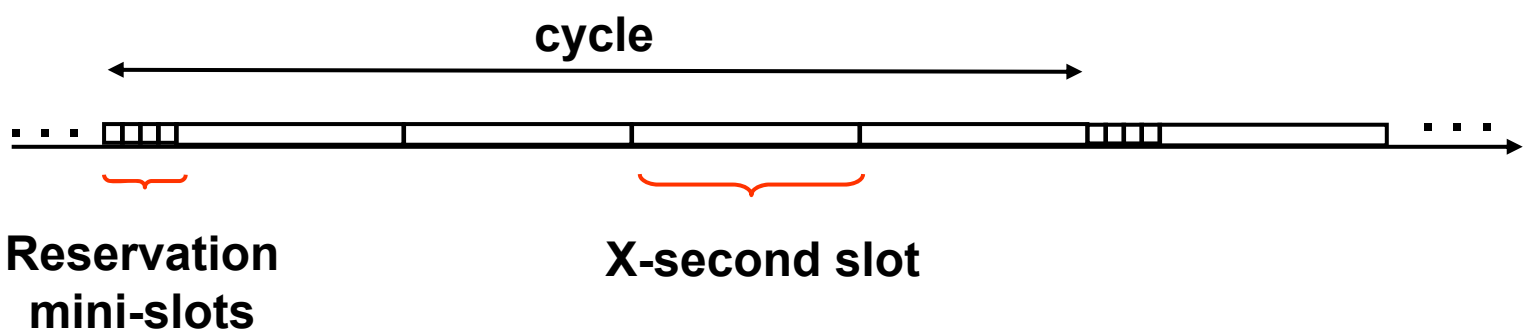

1 to 1 mapping

Carrier Sensing Multiple Access (CSMA)

- A station senses the channel before it starts transmission
  - If busy, either wait or schedule backoff (different options)

    come back later
  - If idle, start transmission
  - Vulnerable period is reduced to (t_{prop} or $2t_{prop}$?) (due to delay in *channel capture* effect)
  - When collisions occur they involve entire frame transmission times

    cable too long. t_prop > t_X_transmission_time
  - If t_{prop} >X (or if a= t_{prop} /X>1), no gain compared to ALOHA or slotted ALOHA

Station A begins transmission at $t = 0$

if A is sending, then red ang blue should be able to hear -> wait

Station A captures channel at $t = t_{prop}$

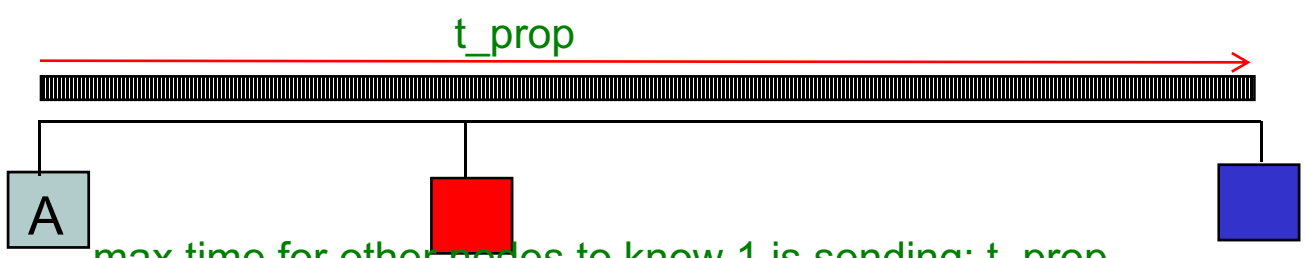

max time for other nodes to know 1 is sending: t_prop

CSMA Options

- Transmitter behavior when busy channel is sensed
  - 1-persistent CSMA (most greedy)
    - Start transmission as soon as the channel becomes idle
    - Low delay and low efficiency
  - Non-persistent CSMA (least greedy)
    - Wait a backoff period, then sense carrier again
    - High delay and high efficiency
  - p-persistent CSMA (adjustable greedy)
    - Wait till channel becomes idle, transmit with prob. p; or wait one mini-slot time & re-sense (with probability 1-*p*)
    - Delay and efficiency can be balanced

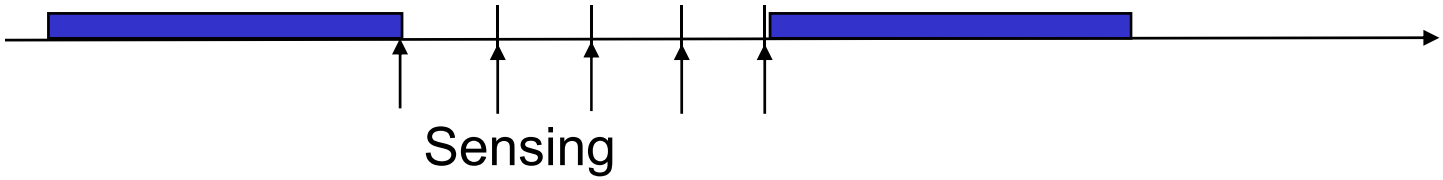

1-Persistent CSMA Throughput

- Better than Aloha & slotted Aloha for small a
- Worse than Aloha for $a > 1$

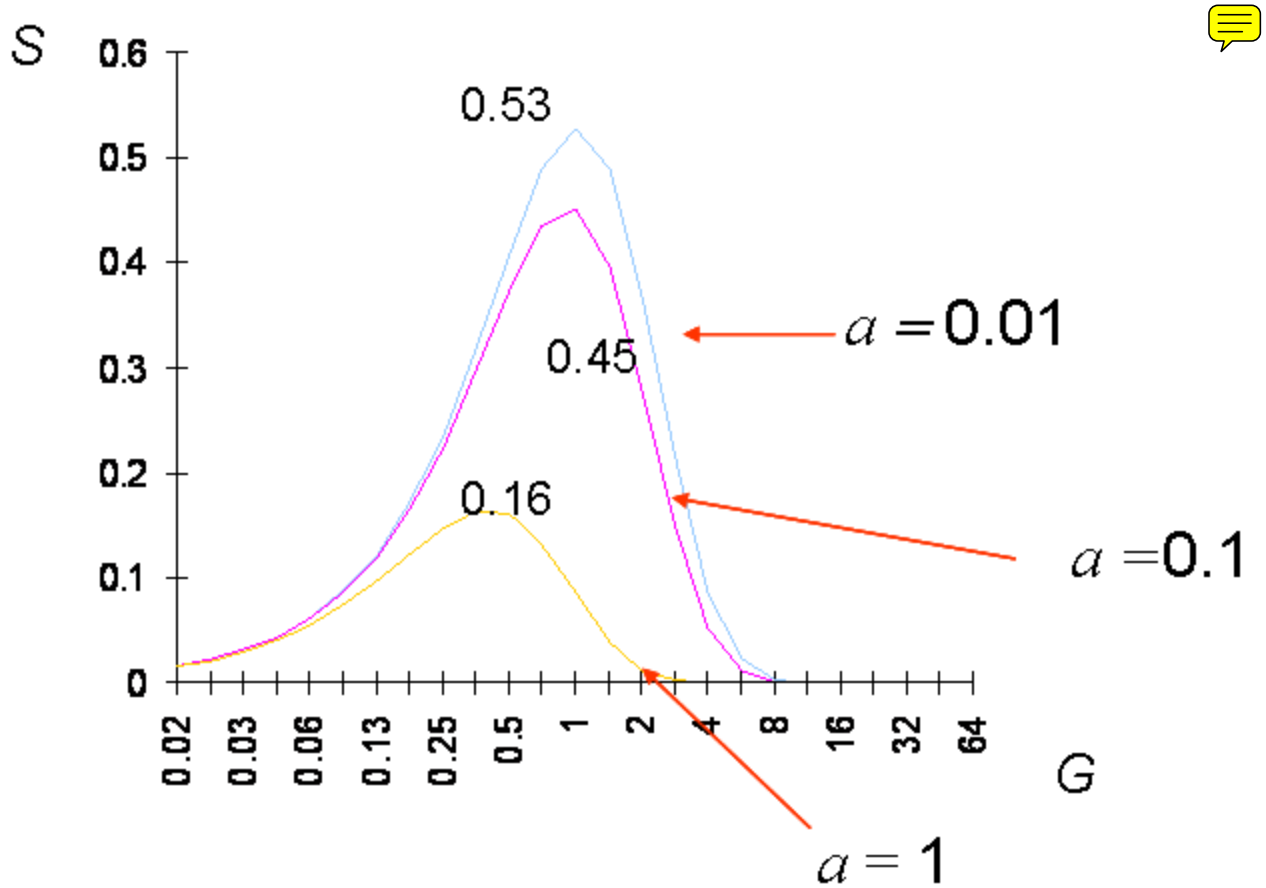

Non-Persistent CSMA Throughput

- Higher maximum throughput than 1-persistent for small a
- Worse than Aloha for $a > 1$

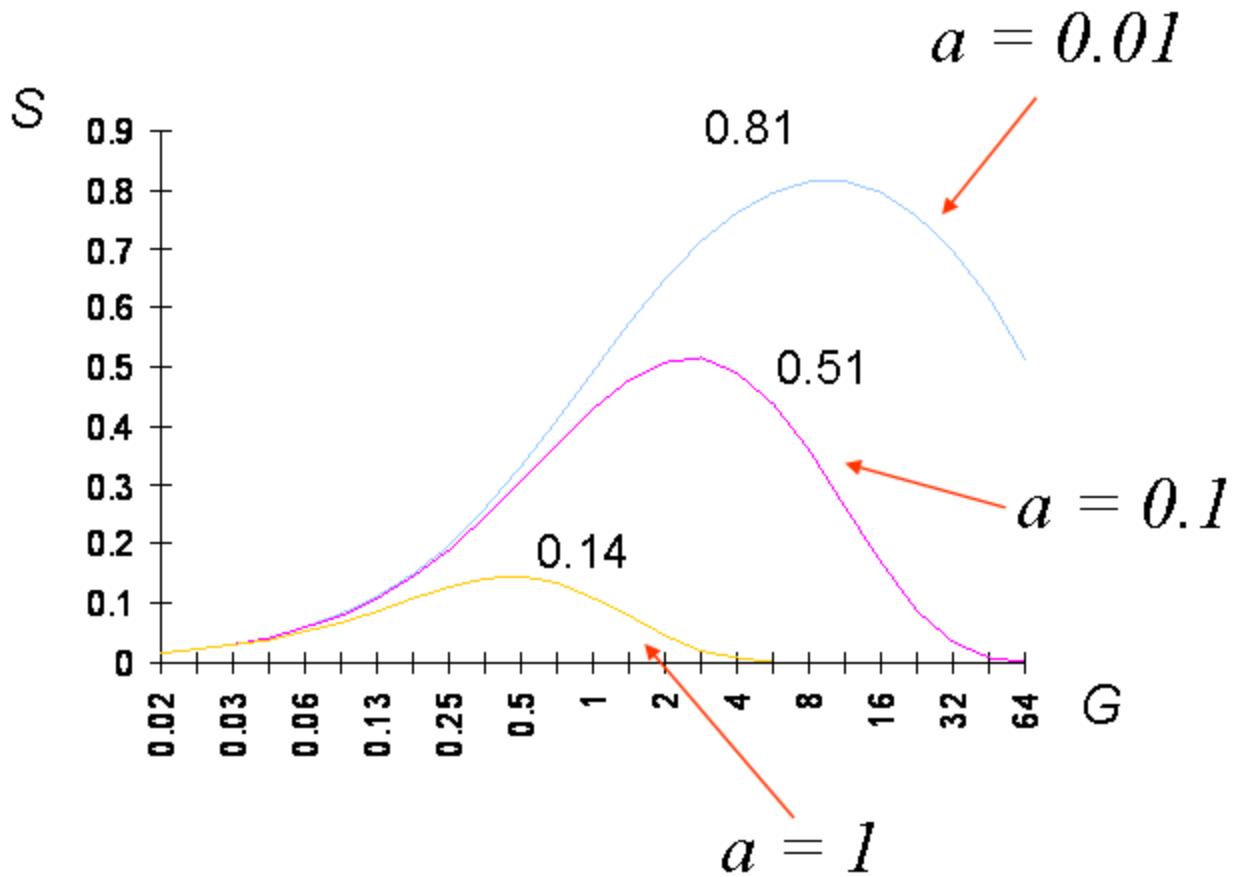

CSMA with Collision Detection (CSMA/CD)

CD

- Monitor for collisions & abort transmission
  - Stations with frames to send, first do carrier sensing
  - After beginning transmissions, stations continue listening to the medium to detect collisions eg: energy based detection
  - If collisions detected, all stations involved stop transmission, reschedule random backoff times, and try again at scheduled times
- In CSMA collisions result in wastage of X seconds spent transmitting an entire frame
- CSMA-CD reduces wastage of time to detect collision and abort transmission

CSMA/CD reaction time

It takes 2 t_{prop} to find out if channel has been captured

CSMA-CD Model

- Assumptions
  - Collisions can be detected in $2t_{prop}$
  - Time slotted in interval of $2t_{prop}$ during contention periods
  - Assume n busy stations, and each may transmit with probability p in each contention time slot
  - Once the contention period is over (a station successfully occupies the channel), it takes X seconds for a frame to be transmitted
  - It takes at least t_{prop} before the next contention period starts. (time for previous signals to be cleared)

争夺

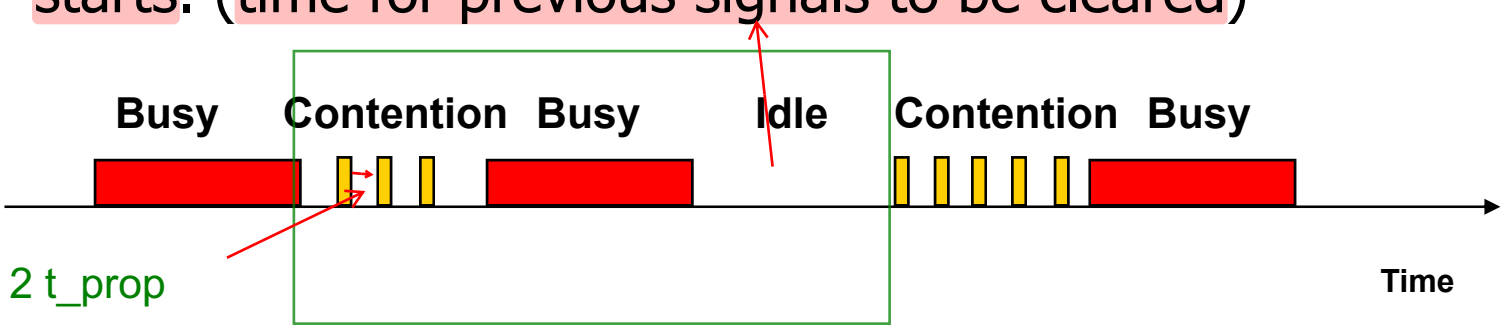

Contention Resolution

- How long does it take to resolve contention?
- Contention is resolved ("success') if exactly 1 station transmits in a slot:

$$P_{success} = np(1-p)^{n-1}$$

- By taking derivative of $P_{success}$ we find max occurs at p=1/n

$$P_{success}^{\max} = n\frac{1}{n}(1-\frac{1}{n})^{n-1} = (1-\frac{1}{n})^{n-1} \rightarrow \frac{1}{e}$$

- On average, $1/P^{max}$ = e = 2.718 time slots to resolve contention

$$Average\ Contention\ Period = 2t_{prop}e\ seconds$$

CSMA/CD Throughput

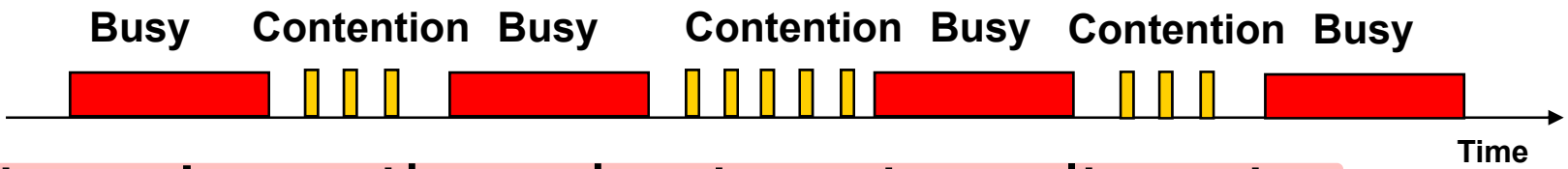

- At maximum throughput, system alternates between contention periods and frame transmission times

$$\rho_{\max} = \frac{X}{X + t_{prop} + 2et_{prop}} = \frac{1}{1 + (2e+1)a} = \frac{1}{1 + (2e+1)Rd / v\,L}$$

- where:

  R bits/sec, L bits/frame, X=L/R seconds/frame

  $a = t_{prop}/X$

  v meters/sec. speed of light in medium

  d meters is diameter of system

  $2e+1 = 6.44$

CSMA-CD Application: Ethernet

- First Ethernet LAN standard used CSMA-CD
  - 1-persistent Carrier Sensing
  - R = 10 Mbps
  - t_{prop} = ?
    - 512 bits = 64 byte slot = 2 t_{prop}
    - t_{prop} = 51.2/2 = 25.6 microsec
    - Distance: 25.6 microsec x 2000 km/s = 5.12 km
    - accommodates 5 km + 4 repeaters
  - Truncated Binary Exponential Backoff
    - After nth collision, select backoff from {0, 1,…, 2^k – 1}, where k=min(n, 10)

Throughput for Random Access MACs

- For small a: CSMA-CD has best throughput
- For larger a: Aloha & slotted Aloha better throughput

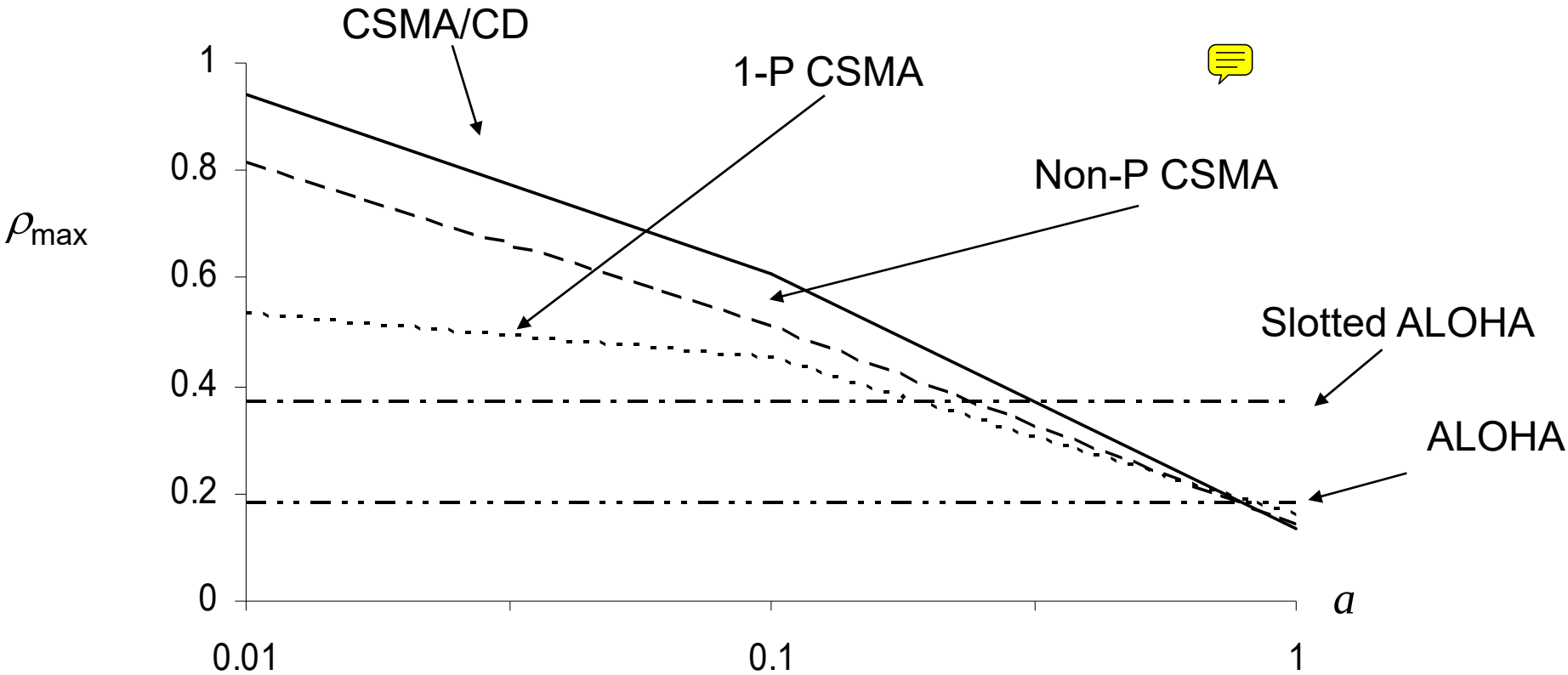

samll alpha, high performance

Carrier Sensing and Priority Transmission

- Certain applications require faster response than others, e.g. ACK messages

  inter-frame spacing time (IFS)
- Impose different interframe times
  - High priority traffic sense channel for time τ_1
  - Low priority traffic sense channel for time $\tau_2 > \tau_1$
  - High priority traffic, if present, seizes channel first

    if arrive at the same same, higher priority can get channel first
- This priority mechanism is used in IEEE 802.11 wireless LAN

Scheduling

Scheduling

- Schedule frame transmissions to avoid collision in shared medium
  - ✓ More efficient channel utilization
  - ✓ Less variability in delays jitter
  - ✓ Can provide fairness to stations
  - ✗ Increased computational or procedural complexity
- Two main approaches
  - Reservation slotted aloha can support it
  - Polling

Reservations Systems

- *Centralized systems*: A central controller accepts requests from stations and issues grants to transmit
  - Frequency Division Duplex (FDD): Separate frequency bands for uplink & downlink
  - Time-Division Duplex (TDD): Uplink & downlink time-share the same channel
- *Distributed systems*: Stations implement a decentralized algorithm to determine transmission order

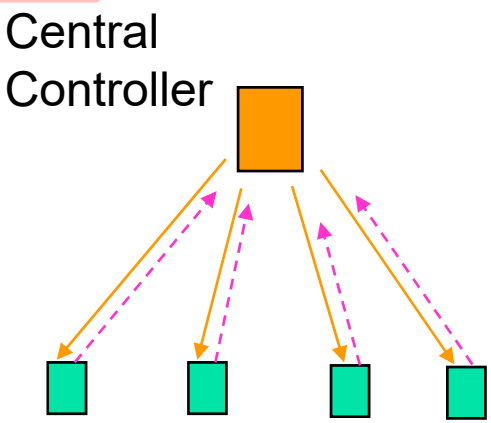

cellphone system

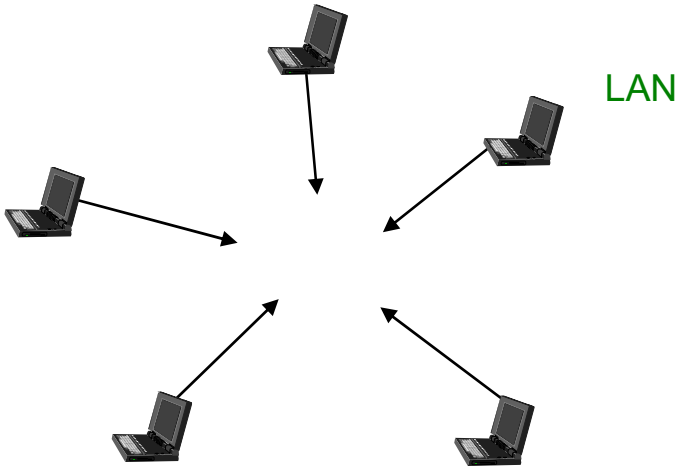

scallable

Reservation Systems

- Transmissions organized into cycles
- Cycle: reservation interval + frame transmissions
- Reservation interval has a minislot for ***each*** station to request reservations for frame transmissions

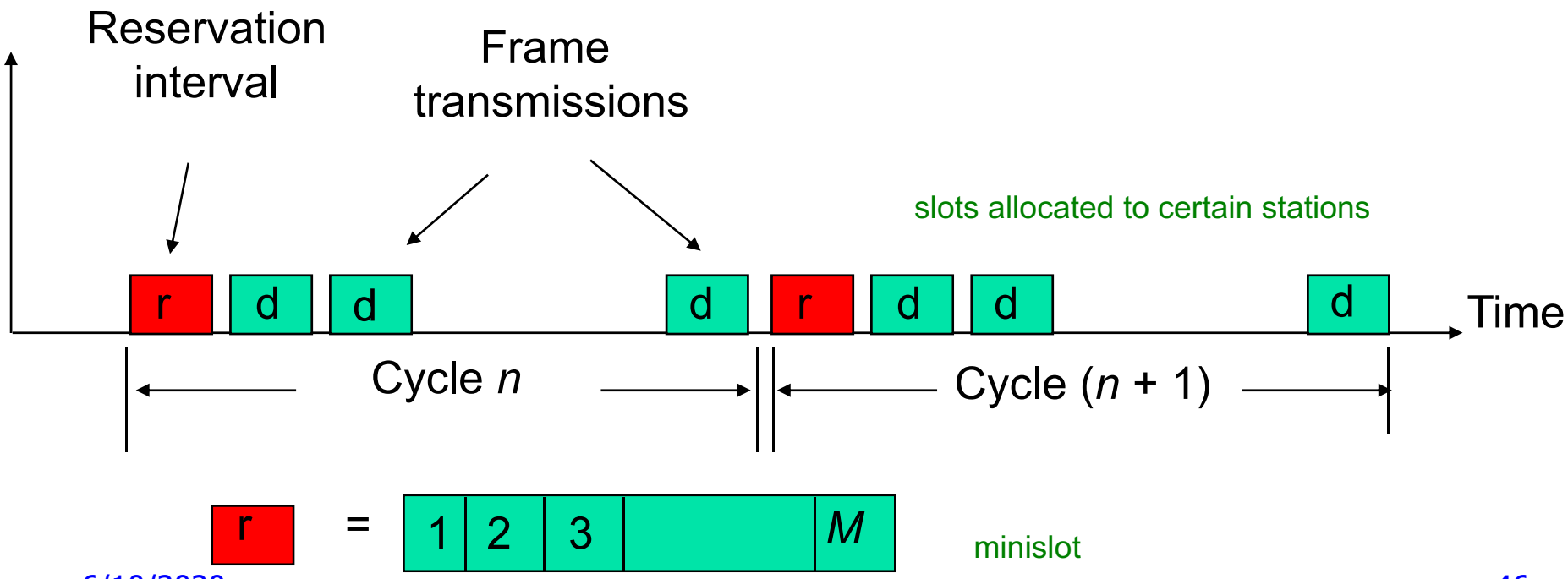

Reservation System Options

- Centralized or distributed system
  - *Centralized systems*: A central controller listens to reservation information, decides order of transmission, issues grants
  - *Distributed systems*: Each station determines its slot for transmission from the reservation information
- Single or Multiple Frames
  - *Single frame reservation*: Only one frame transmission can be reserved within a reservation cycle
  - *Multiple frame reservation*: More than one frame transmission can be reserved within a reservation cycle
- Channelized or Random Access Reservations
  - *Channelized (typically TDMA) reservation*: Reservation messages from different stations are multiplexed without any risk of collision
  - *Random access reservation*: Each station transmits its reservation message randomly until the message goes through

Example

- Initially stations 3 & 5 have reservations to transmit frames
- Station 8 becomes active and makes reservation
- Cycle now also includes frame transmissions from station 8

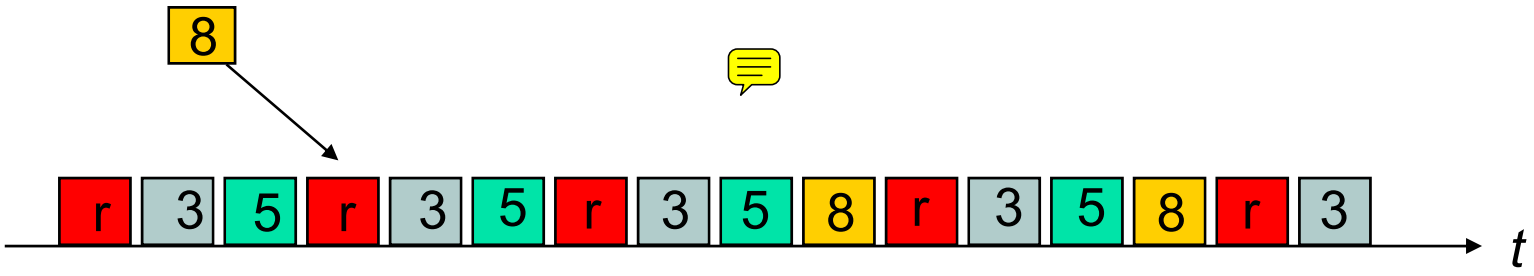

Efficiency of Reservation Systems

some percentage of transmission itme

- Assume minislot duration = vX

single frame transmission time

- TDMA single frame reservation scheme
  - If propagation delay is negligible, a single frame transmission requires *(1+v)X* seconds
  - Link is fully loaded when all stations transmit, maximum efficiency is:

$$\rho_{\max} = \frac{MX}{M\boxed{\mathrm{v}X} + MX} = \frac{1}{1+\mathrm{v}}$$

- TDMA *k* frame reservation scheme
  - If *k* frame transmissions can be reserved with a reservation message and if there are *M* stations, as many as *Mk* frames can be transmitted in *XM(k+v)* seconds
  - Maximum efficiency is:

$$\rho_{\max} = \frac{MkX}{M\mathrm{v}X + MkX} = \frac{1}{1+\frac{\mathrm{v}}{k}}$$

use a minislot for multiple tansmission

一个vX对应多个frame：KX

Random Access Reservation Systems

- *Large number of light traffic stations*
  - Dedicating a minislot to each station is inefficient
- Slotted ALOHA reservation scheme
  - Stations use slotted Aloha in reservation minislots
  - On average, each reservation takes at least e minislot attempts
  - Effective time required for the reservation is $2.71vX$

$$\rho_{\max} = \frac{X}{X(1+ev)} = \frac{1}{1 + 2.71v}$$

Example: GPRS

- General Packet Radio Service
  - Packet data service in GSM cellular radio
  - GPRS devices, e.g. cellphones or laptops, send packet data over radio and then to Internet
  - Slotted Aloha MAC used for reservations
  - Single & multi-slot reservations supported

Reservation Systems and Quality of Service

- Different applications; different requirements
  - Immediate transfer for ACK frames
  - Low-delay transfer & steady bandwidth for voice
  - High-bandwidth for Web transfers
- Reservation provide direct means for QoS
  - Stations make requests per frame
  - Stations can request for persistent transmission access
  - Centralized controller issues grants
    - Preferred approach
  - Decentralized protocol allows stations to determine grants
    - Protocol must deal with error conditions when requests or grants are lost

Polling Systems

- *Centralized polling systems*: A central controller transmits polling messages to stations according to a certain order
- *Distributed polling systems*: A permit for frame transmission is passed from station to station according to a certain order
- A signaling procedure exists for setting up order

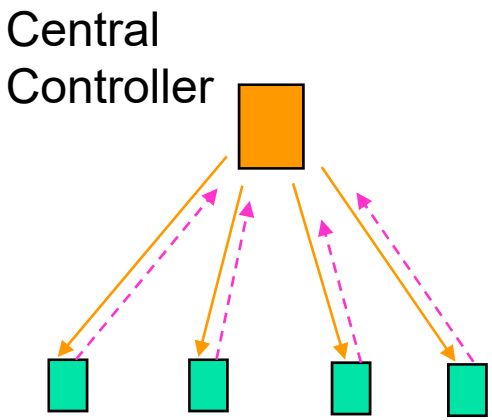

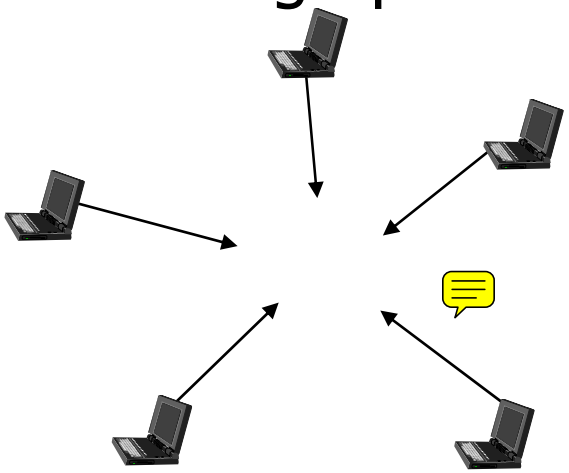

Polling System Options

- Service Limits: How much is a station allowed to transmit per poll?
  - *Exhaustive*: until station's data buffer is empty (including new frame arrivals)
  - *Gated*: all data in buffer when poll arrives
  - *Frame-Limited*: one frame per poll
  - *Time-Limited*: up to some maximum time
- Priority mechanisms
  - More bandwidth & lower delay for stations that appear multiple times in the polling list

based on the frequency it appears in the polling list

Walk Time & Cycle Time

- Assume polling order is round robin
- Time is "wasted" in polling stations
  - Time to prepare & send polling message
  - Time for station to respond
- *Walk time:* from when a station completes transmission to when next station begins transmission polling time
- *Cycle time* is between consecutive polls of a station
- Overhead/cycle = total walk time/cycle time

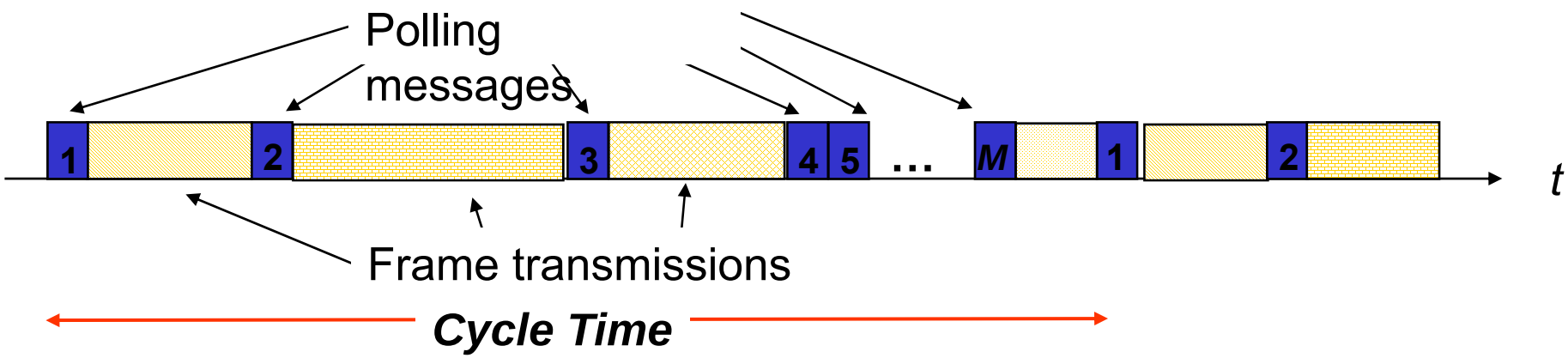

Average Cycle Time

- Assume walk times all equal to t'
- Exhaustive Service: stations empty their buffers
- Cycle time = Mt' + time to empty M station buffers
- λ be frame arrival rate at the system
- N_C average number of frames transmitted from a station
- Time to empty one station buffer:

$$T_{station} = N_c X = (\frac{\lambda}{M} T_c) X = \frac{\rho T_c}{M} \qquad \rho = \lambda X$$

- Average Cycle Time:

$$T_c = Mt' + MT_{station} = Mt' + \rho T_c \quad \Rightarrow \quad T_c = \frac{Mt'}{1-\rho}$$

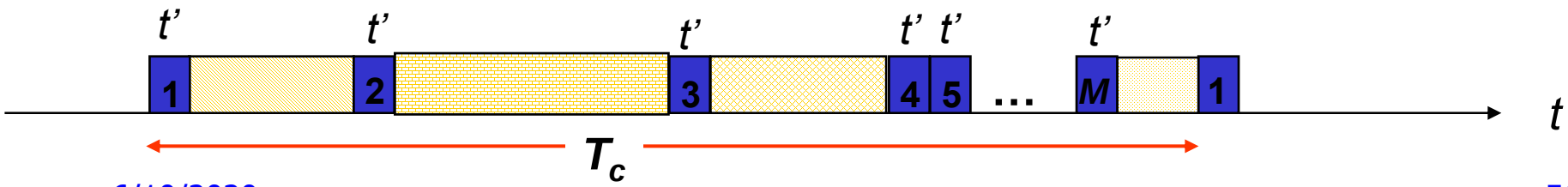

Efficiency of Polling Systems

- Exhaustive Service
  - Cycle time increases as traffic increases, so delays become very large
  - Walk time per cycle becomes negligible compared to cycle time:

high efficency

$$Efficiency = \frac{T_c - Mt'}{T_c} = \rho$$

Can approach 100%

increase cycle time (increase data transmission time)

- Limited Service
  - Many applications cannot tolerate extremely long delays
  - Time or transmissions per station are limited
  - This limits the cycle time and hence delay
  - Efficiency of 100% is not possible

$$Efficiency = \frac{MX}{MX + Mt'} = \frac{1}{1 + t'/X}$$

Single frame per poll

Application: Token-Passing Rings

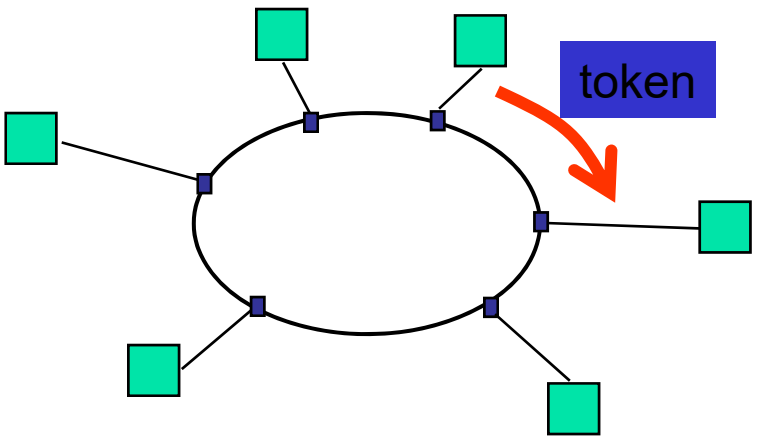

Free Token = Poll

Frame Delimiter is Token
Free = 01111110
Busy = 01111111

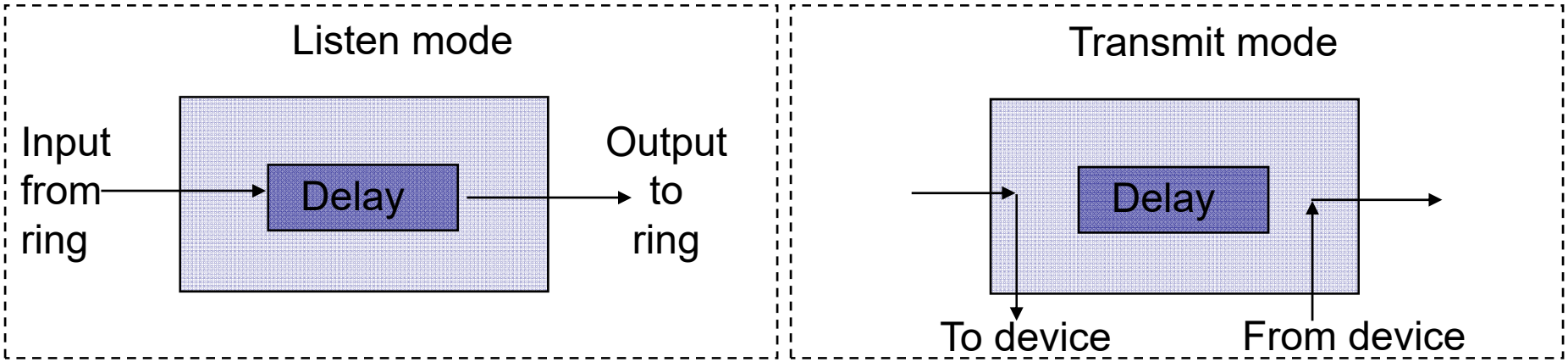

Ready station looks for free token

Flips bit to change free token to busy
Ready station inserts its frames
Reinserts free token when done

Methods of Token Reinsertion

- Ring latency: number of bits that can be simultaneously in transit on ring
- Multi-token operation
  - Free token transmitted immediately after last bit of data frame
- Single-token operation B
  - Free token inserted after last bit of the busy token is received back
  - Transmission time at least ring latency
  - If frame is longer than ring latency, equivalent to multi-token operation
- Single-Frame operation A
  - Free token inserted after transmitting station has received last bit of its frame
  - Equivalent to attaching trailer equal to ring latency

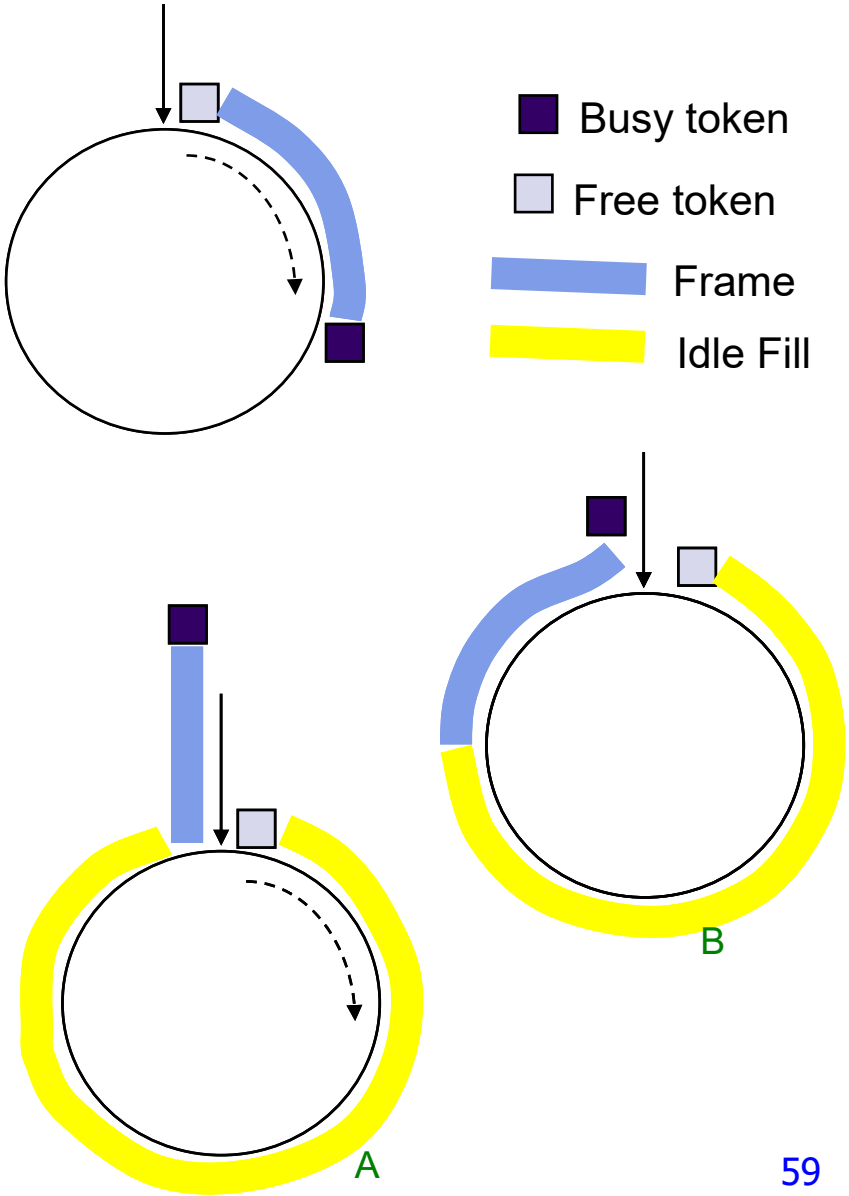

Token Ring Throughput

- Definition
  - τ': ring latency (time required for bit to circulate ring)
  - X: maximum frame transmission time allowed per station
- *Multi-token operation*
  - Assume network is fully loaded, and all M stations transmit for X seconds upon the reception of a free token
  - This is a polling system with limited service time:

$$\rho_{\max} = \frac{MX}{\tau' + MX} = \frac{1}{1 + \tau' / MX} = \frac{1}{1 + a' / M}$$

$$a' = \frac{\tau'}{X} \text{ is the normalized ring latency}$$

Token Ring Throughput

- *Single-token operation*
  - Effective frame transmission time is maximum of X and τ', therefore

$$\rho_{max} = \frac{MX}{\tau' + M\max\{(X, \tau'\}} = \frac{1}{\max\{1, a'\} + a'/M}$$

- *Single-frame operation*
  - Effective frame transmission time is X+ τ' ,therefore

$$\rho_{max} = \frac{MX}{\tau' + M(X + \tau')} = \frac{1}{1 + a'(1 + 1/M)}$$

Token Reinsertion Efficiency Comparison

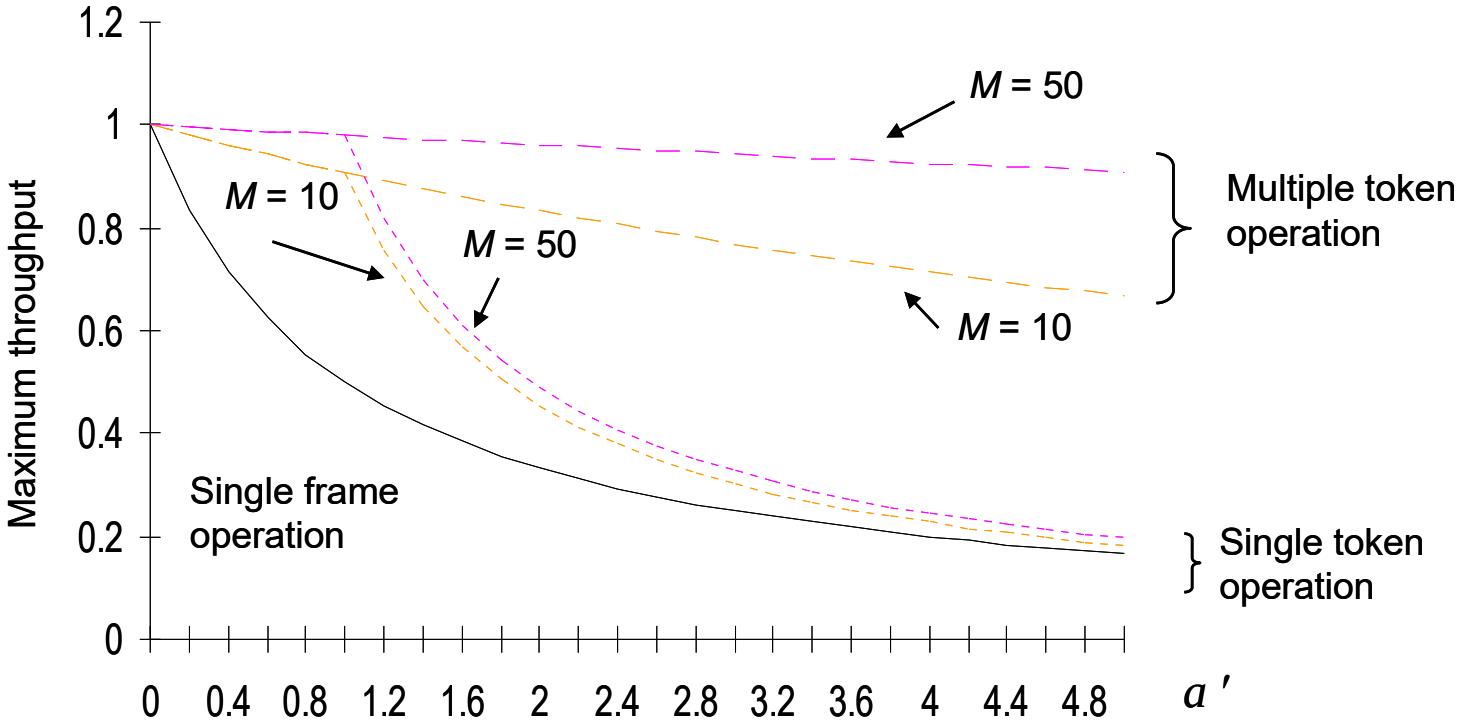

- a <<1, any token reinsertion strategy acceptable
- a ≈1, single token reinsertion strategy acceptable
- a >1, multitoken reinsertion strategy necessary

Application Examples

- Single-frame reinsertion
  - IEEE 802.5 Token Ring LAN @ 4 Mbps
- Single token reinsertion
  - IBM Token Ring @ 4 Mbps
- Multi-token reinsertion
  - IEEE 802.5 and IBM Ring LANs @ 16 Mbps
  - FDDI Ring @ 50 Mbps
- All of these LANs incorporate token priority mechanisms

Comparison of MAC approaches

- Aloha & Slotted Aloha
  - Simple & quick transfer at very low load
  - Accommodates large number of low-traffic bursty users
  - Highly variable delay at moderate loads
  - Efficiency does not depend on $a = t_{prop}/X$
- CSMA-CD
  - Quick transfer and high efficiency for low delay-bandwidth product
  - Can accommodate a large number of bursty users
  - Variable and unpredictable delay

Comparison of MAC approaches

- Reservation
  - On-demand transmission of bursty or steady streams
  - Accommodates large number of low-traffic users with slotted Aloha reservations
  - Can incorporate QoS
  - Handles large delay-bandwidth product via delayed grants
- Polling
  - Generalization of time-division multiple access
  - Provides fairness through regular access opportunities
  - Can provide bounds on access delay
  - Performance deteriorates with large delay-bandwidth product

Delay Performance and Queuing[skip]

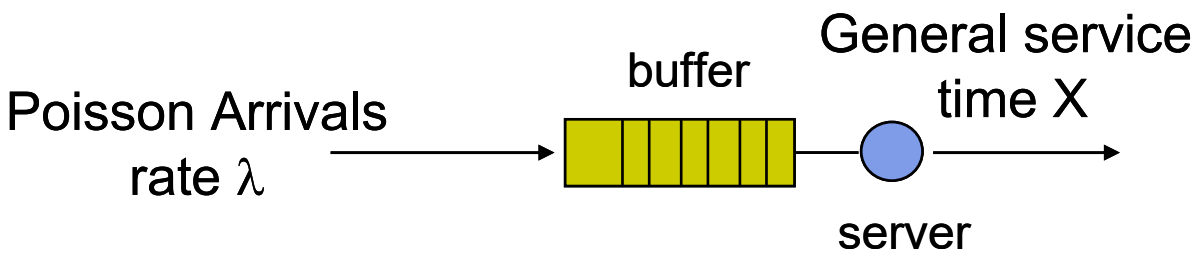

- Arrival Model
  - Independent frame interarrival times:
  - Average $1/\lambda$
  - Exponential distribution
  - "Poisson Arrivals"
- Infinite Buffer
  - No Blocking
- Frame Length Model
  - Independent frame transmission times X
  - Average $E[X] = 1/\mu$
  - General distribution
  - Constant, exponential,…
- Load $\rho=\lambda/\mu$
  - Stability Condition: $\rho<1$

M/G/1 model can be used as baseline for MAC performance

M/G/1 Performance Results

Total Delay = Waiting Time + Service Time

Average Waiting Time:

$$E[W] = \frac{\rho}{2(1-\rho)}\left(1 + \frac{\sigma_X^2}{E[X]^2}\right)E[X]$$

Average Total Delay:

$$E[T] = E[W] + E[X]$$

Example: M/D/1

$$E[W] = \frac{\rho}{2(1-\rho)}E[X]$$

M/G/1 Vacation Model

- In M/G/1 model, a frame arriving to an empty multiplexer begins transmission immediately
- In many MACs, there is a delay before transmission can begin
- *M/G/1 Vacation Model*: when system empties, server goes away on vacation for random time V

$$E[W] = \frac{\rho}{2(1-\rho)}\left(1+\frac{\sigma_X^2}{E[X]^2}\right)E[X] + \frac{E[V^2]}{2E[V]}$$

Extra delay term

MAC in Different Networks

IEEE 802 Networks

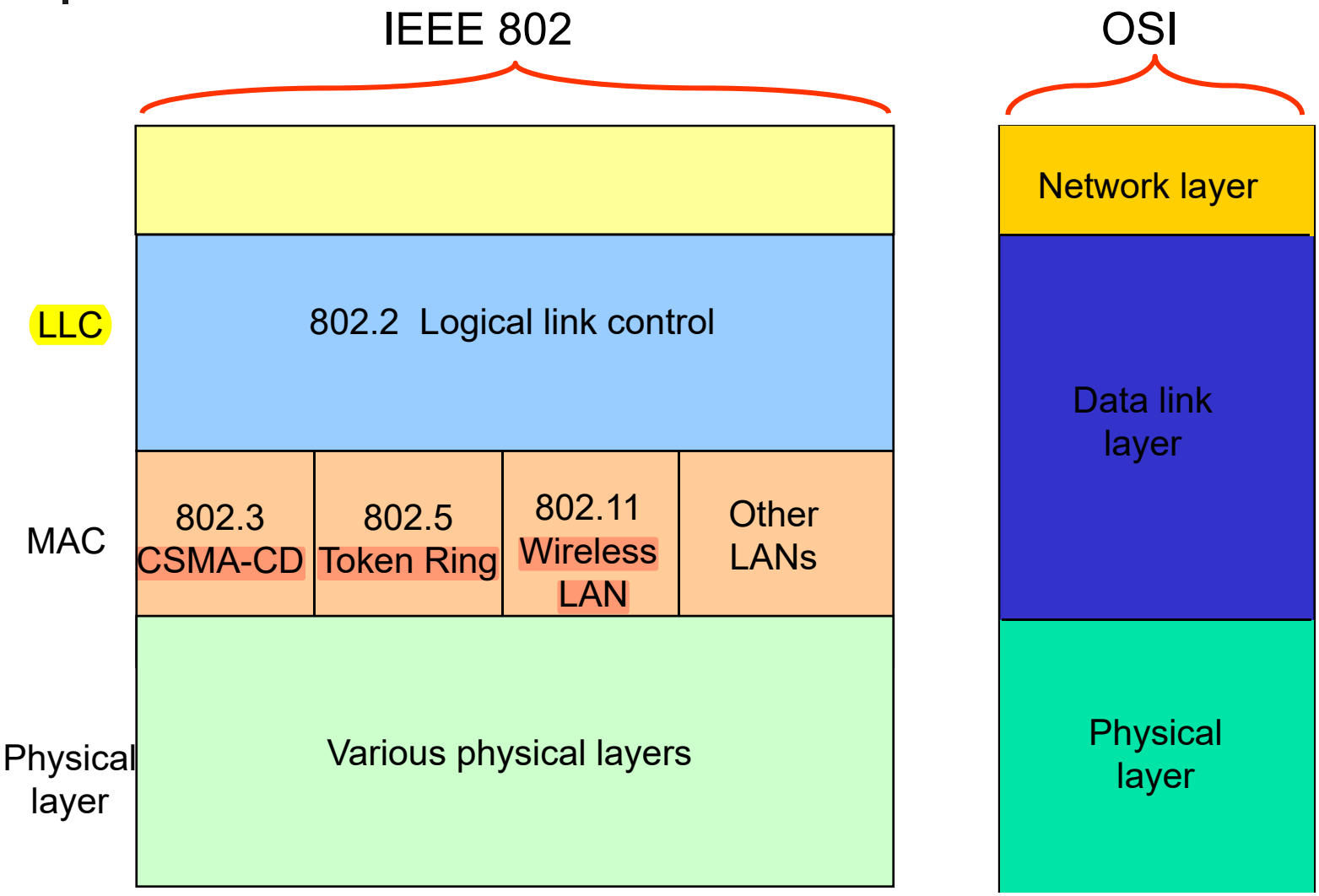

Logical Link Control Layer

- IEEE 802.2: LLC enhances service provided by MAC

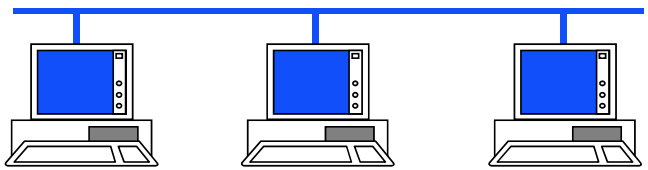

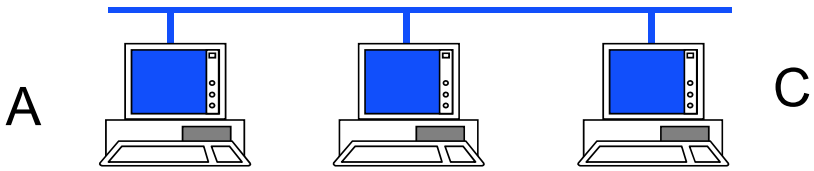

Unreliable Datagram Service

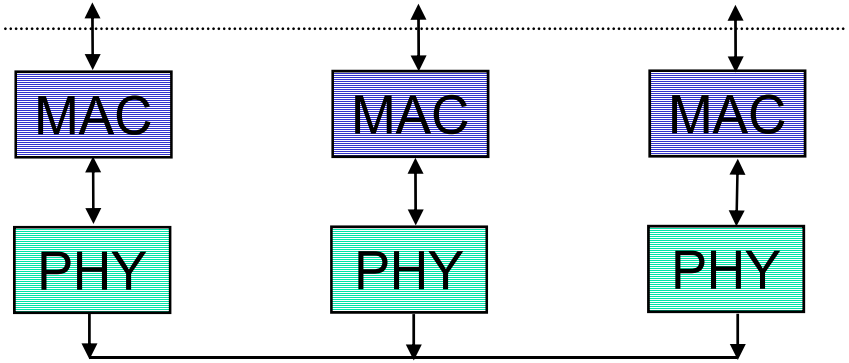

Reliable frame service

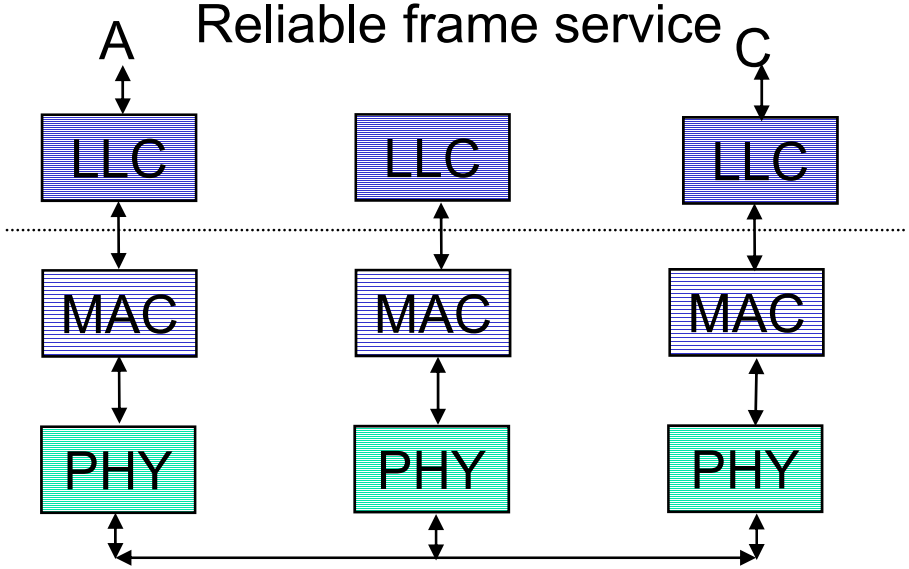

Logical Link Control Services

- Type 1: Unacknowledged connectionless service
  - Unnumbered frame mode of HDLC
- Type 2: Reliable connection-oriented service
  - Asynchronous balanced mode of HDLC
- Type 3: Acknowledged connectionless service

- Additional addressing
  - A workstation has a single MAC physical address
  - Can handle several logical connections, distinguished by their SAP (service access points).

LLC PDU Structure

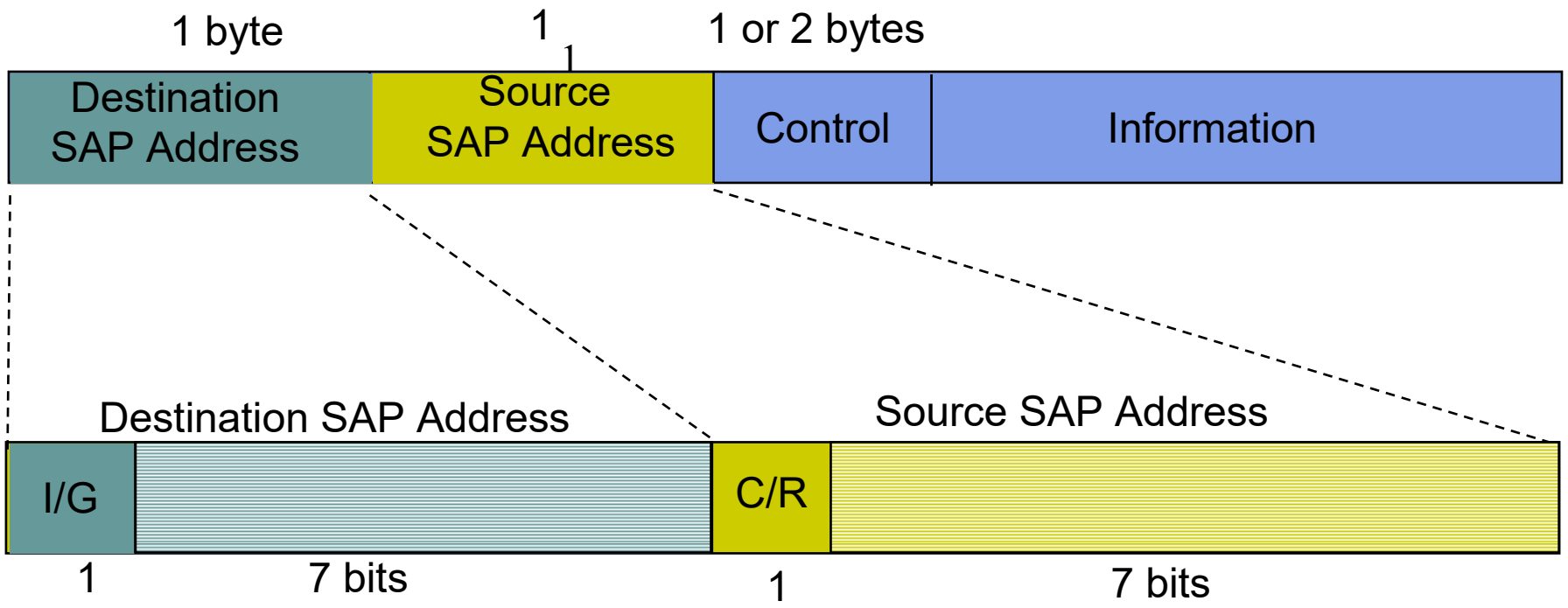

I/G = Individual or group address
C/R = Command or response frame

Examples of SAP Addresses:

06	IP packet
E0	Novell IPX
FE	OSI packet
AA	SubNetwork Access protocol (SNAP)

Encapsulation of MAC frames

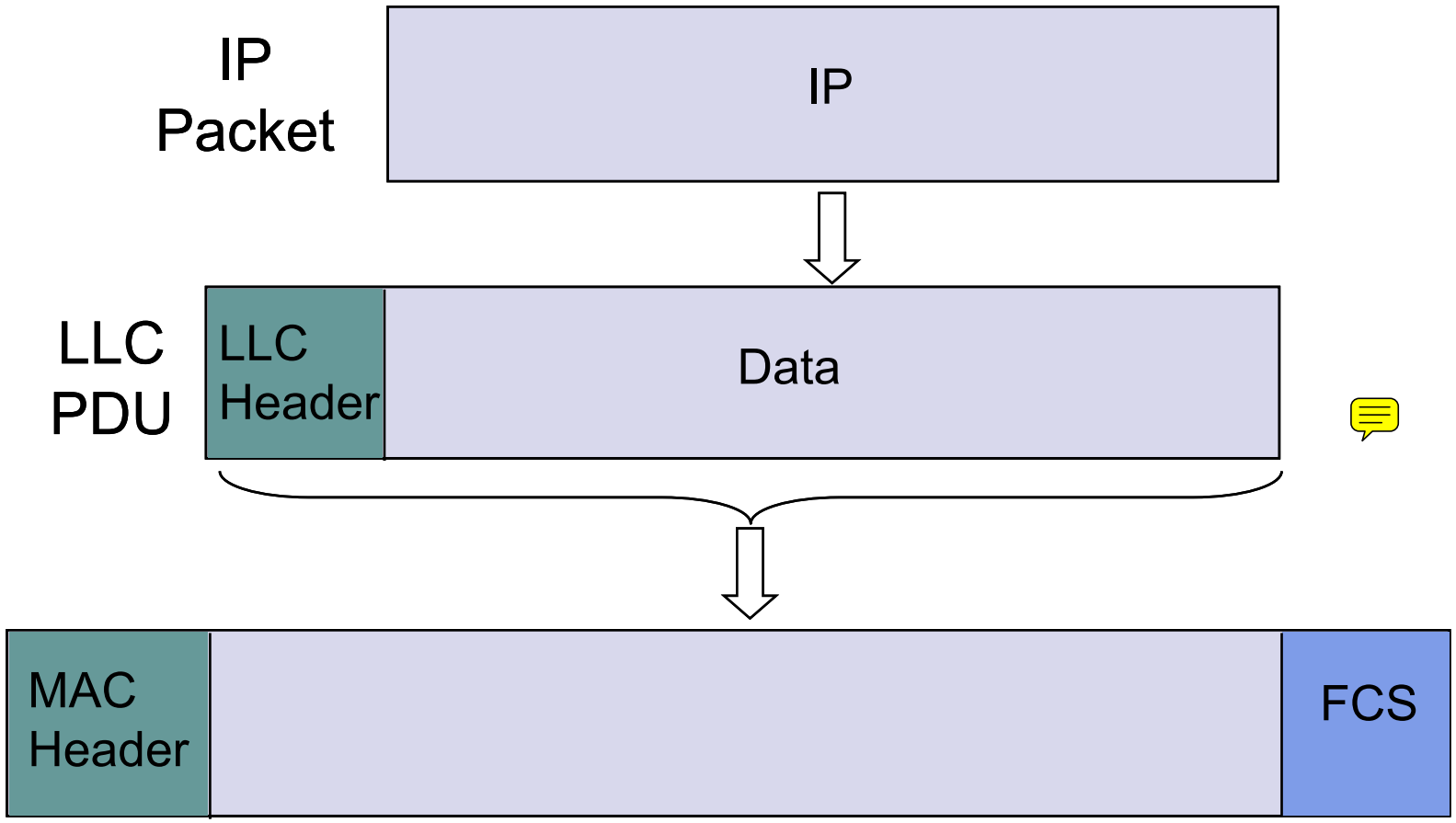

IEEE 802.3 MAC: Ethernet

- CSMA/CD
- *Slot Time* is the critical system parameter
  - upper bound on time to detect collision
  - upper bound on time to acquire channel
  - upper bound on length of frame segment generated by collision
  - quantum for retransmission scheduling
  - max{round-trip propagation, MAC jam time}
- Truncated binary exponential backoff
  - for retransmission n: $0 < r < 2^k$, where $k=\min(n,10)$
  - Give up after 16 retransmissions

IEEE 802.3 Original Parameters

- Transmission Rate: 10 Mbps
- Min Frame: 512 bits = 64 bytes
- Slot time: 512 bits/10 Mbps = 51.2 μsec
  - 51.2 μsec x 2×10^5 km/sec =10.24 km, 1 way
  - 5.12 km round trip distance
- Max Length: 2500 meters + 4 repeaters

- *Each x10 increase in bit rate, must be accompanied by x10 decrease in distance*

IEEE 802.3 MAC Frame

- Every frame transmission begins "from scratch"
- Preamble helps receivers synchronize their clocks to transmitter clock
- 7 bytes of 10101010 generate a square wave
- Start frame byte changes to 10101011
- Receivers look for change in 10 pattern

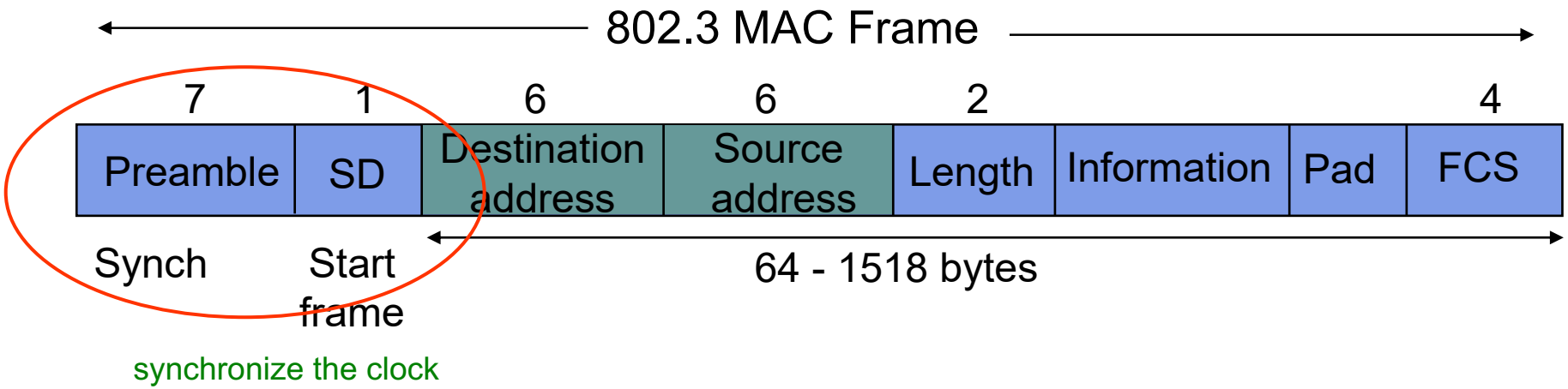

synchronize the clock

IEEE 802.3 MAC Frame

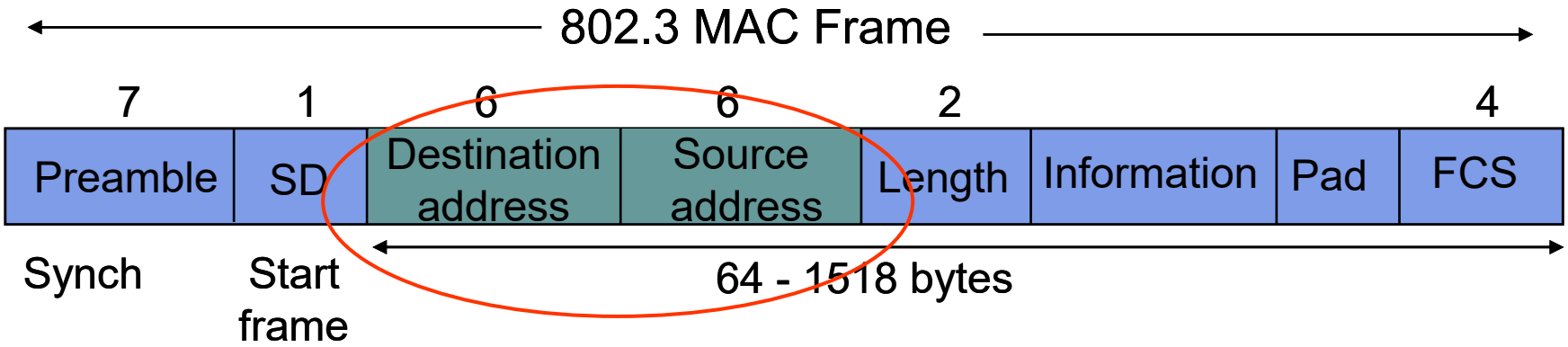

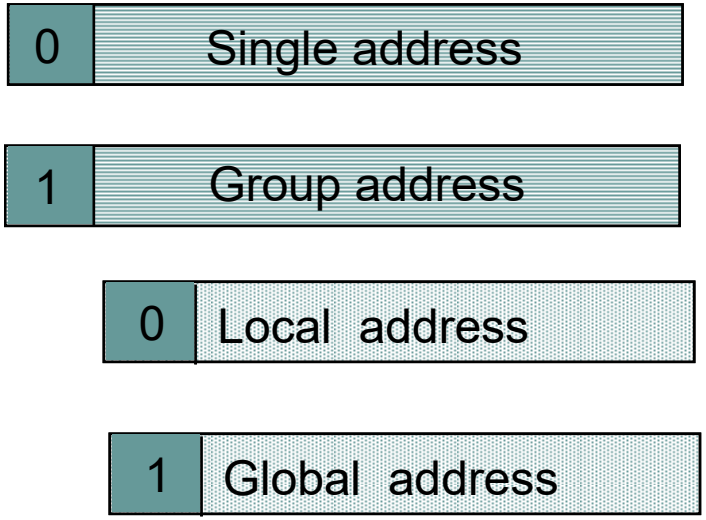

ifconfig

- Destination address
  - single address
  - group address
  - broadcast = 111...111

  Addresses
  - local or global
- Global addresses
  - first 24 bits assigned to manufacturer;
  - next 24 bits assigned by manufacturer
  - Cisco 00-00-0C
  - 3COM 02-60-8C

IEEE 802.3 MAC Frame

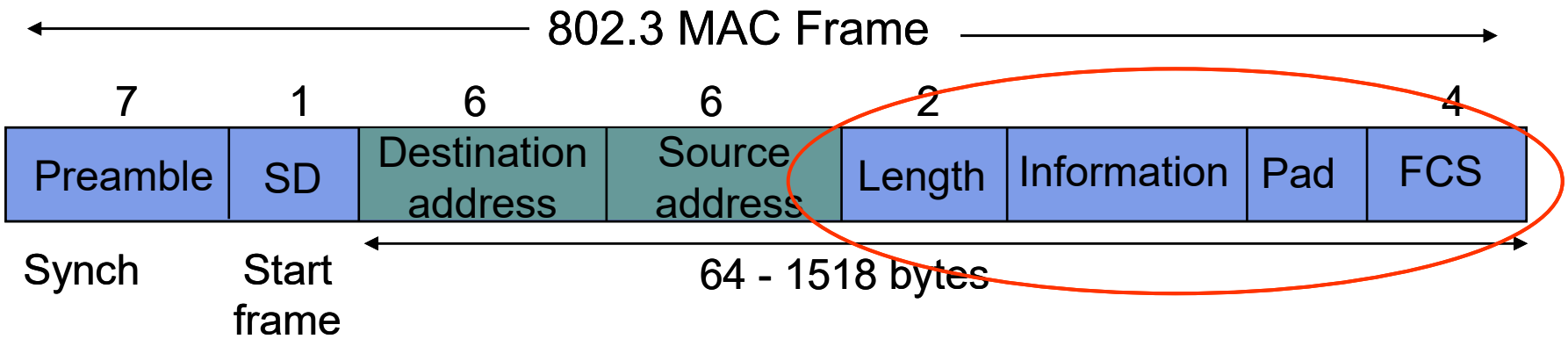

- Length: # bytes in information field
  - Max frame 1518 bytes, excluding preamble & SD
  - Max information 1500 bytes: 05DC
- Pad: ensures min frame of 64 bytes
- FCS: CCITT-32 CRC, covers addresses, length, information, pad fields
  - NIC discards frames with improper lengths or failed CRC

SubNetwork Access Protocol (SNAP)

- IEEE standards assume LLC always used
- Higher layer protocols developed for DIX expect *type* field
- DSAP, SSAP = AA, AA indicate SNAP PDU;
- 03 = Type 1 (connectionless) service
- SNAP used to encapsulate Ethernet frames

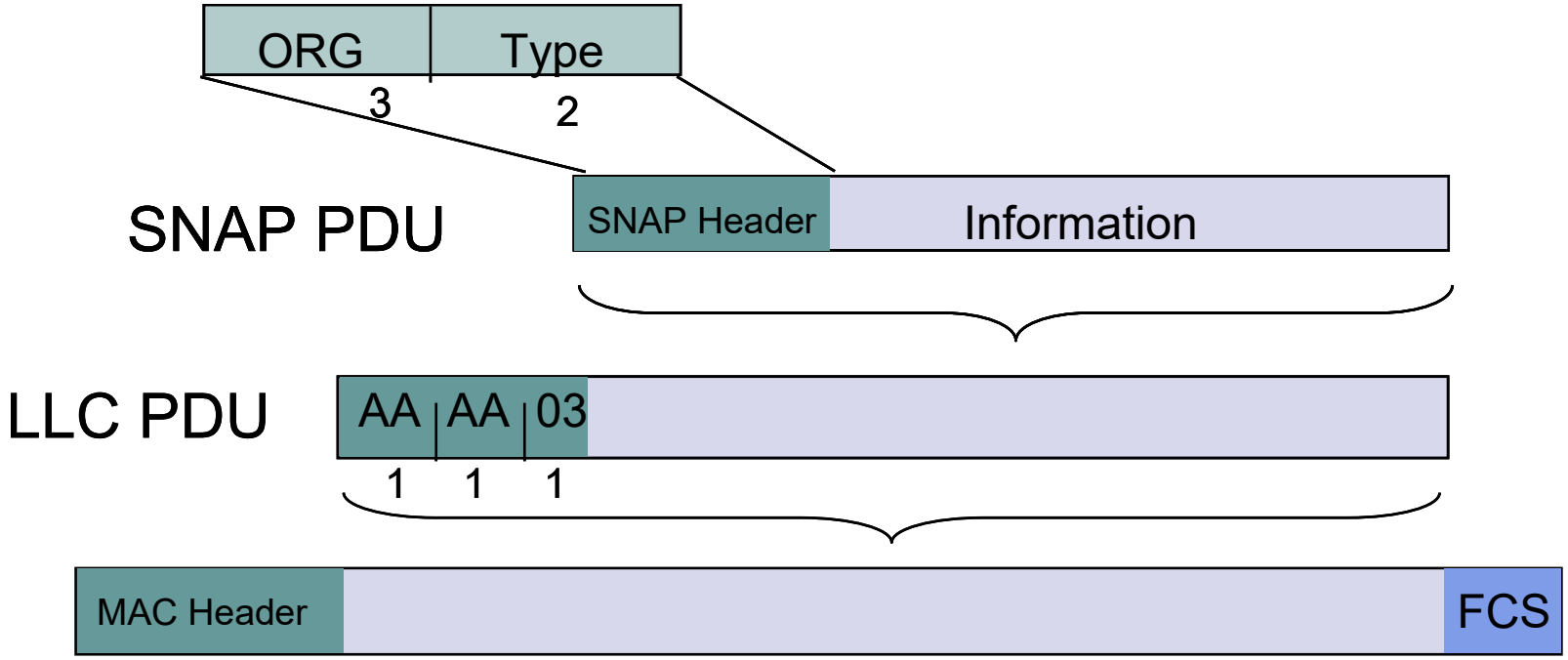

Ethernet Hubs & Switches

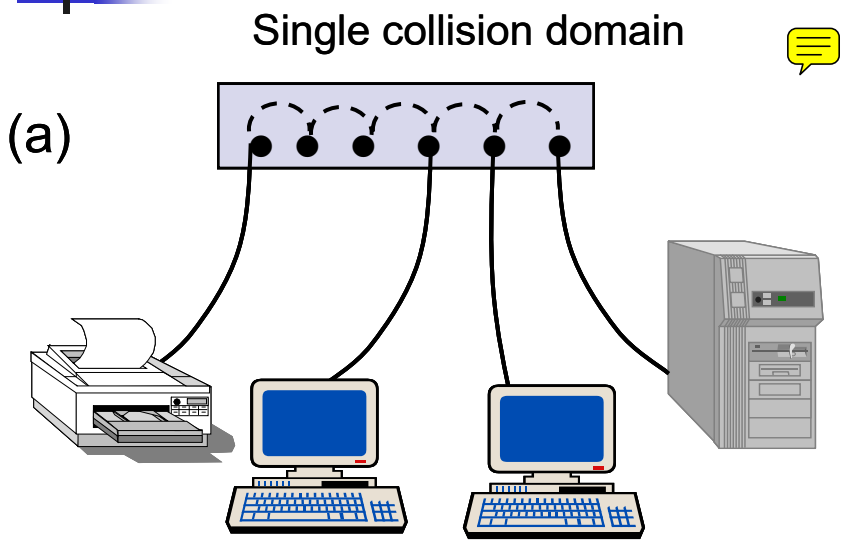

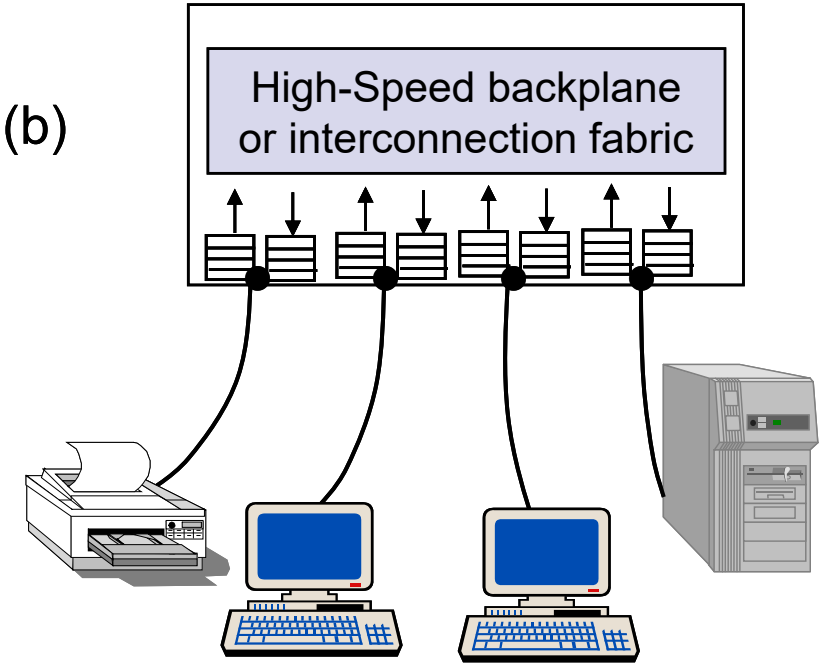

Twisted Pair Cheap
Easy to work with
Reliable
Star-topology CSMA-CD

collision based scheme for random access

Twisted Pair Cheap
Bridging increases scalability
Separate collision domains
Full duplex operation

improved version
differnent devices can be connected to switch
do not use CMSA-CD; more efficient

Ethernet Scalability

- CSMA-CD maximum throughput depends on normalized delay-bandwidth product $a = t_{prop}/X$
- x10 increase in bit rate = x10 decrease in X
- To keep a constant need to either: decrease t_{prop} *(distance) by x10;* or increase frame length x10

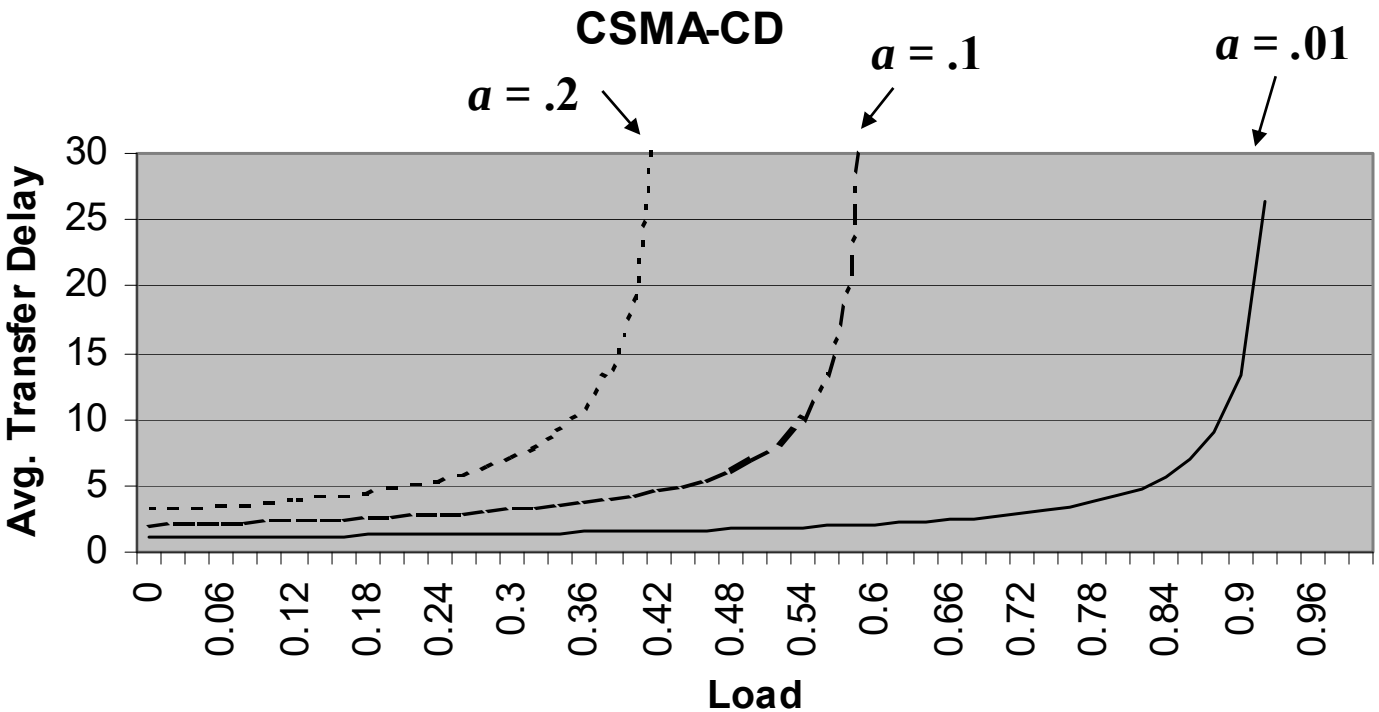

Fast Ethernet

do not use cmsa-cd today

To preserve compatibility with 10 Mbps Ethernet:

- Same frame format, same interfaces, same protocols
- Hub topology only with twisted pair & fiber
- Bus topology & coaxial cable abandoned
- Category 3 twisted pair (ordinary telephone grade) requires 4 pairs
- Category 5 twisted pair requires 2 pairs (most popular)
- Most prevalent LAN today

	100baseT4	**100baseT**	**100baseFX**
Medium	Twisted pair category 3 UTP 4 pairs	Twisted pair category 5 UTP two pairs	Optical fiber multimode Two strands
Max. Segment Length	100 m	100 m	2 km
Topology	Star	Star	Star

Gigabit Ethernet

- Slot time increased to *512 bytes*
- Small frames need to be extended to 512 B
- Frame bursting to allow stations to transmit burst of short frames
- Frame structure preserved but CSMA-CD essentially abandoned
- Extensive deployment in backbone of enterprise data networks and in server farms

	1000baseSX	**1000baseLX**	**1000baseCX**	**1000baseT**
Medium	Optical fiber multimode Two strands	Optical fiber single mode Two strands	Shielded copper cable	Twisted pair category 5 UTP
Max. Segment Length	550 m	5 km	25 m	100 m
Topology	Star	Star	Star	Star

Typical Ethernet Deployment

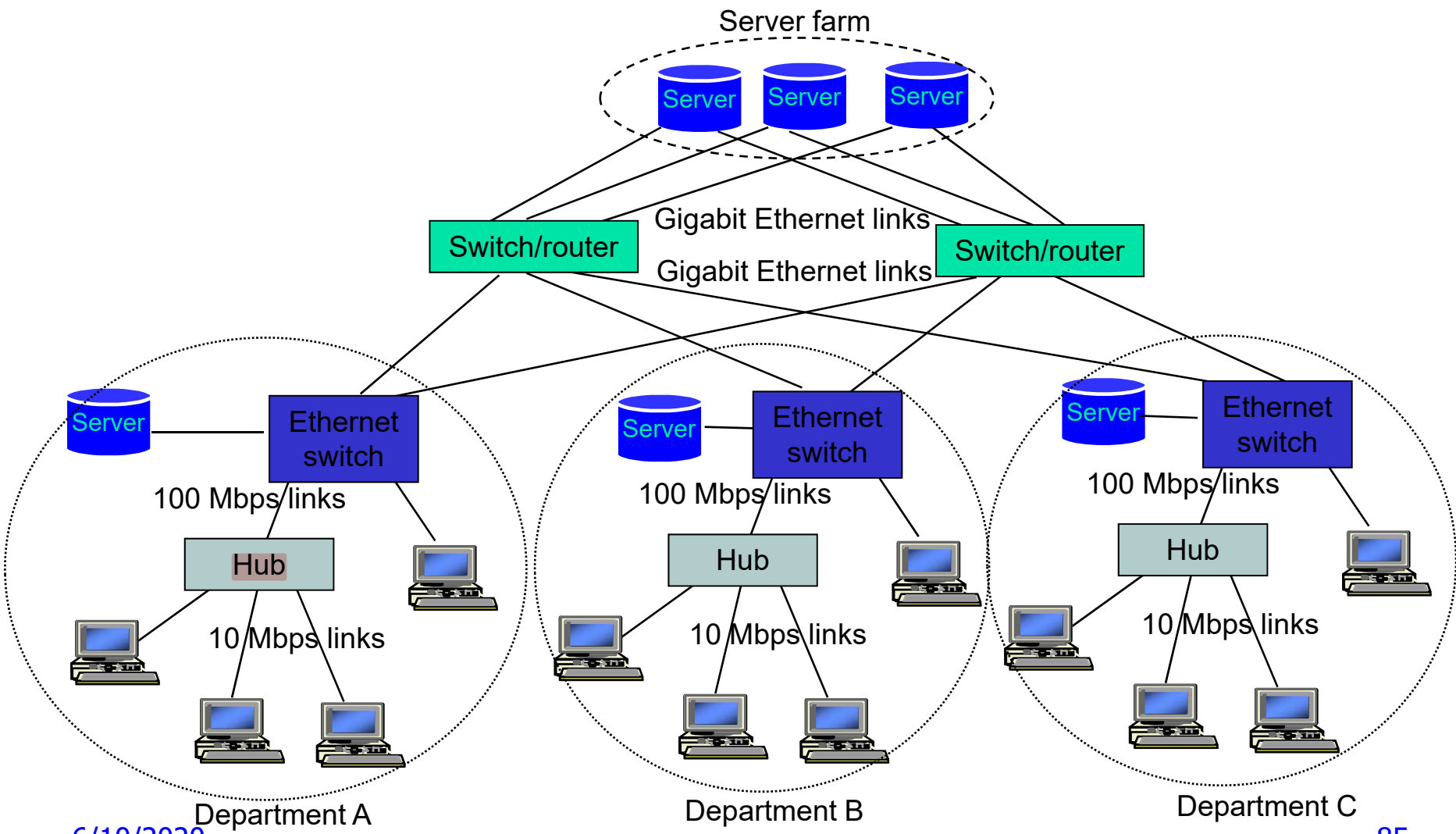

IEEE 802.11 Wireless LAN

- Stimulated by availability of *unlicensed spectrum*
  - U.S. Industrial, Scientific, Medical (ISM) bands
  - 902-928 MHz, 2.400-2.4835 GHz, 5.725-5.850 GHz
- Targeted wireless LANs @ 20 Mbps
- MAC for high speed wireless LAN
- Ad Hoc & Infrastructure networks
- Variety of physical layers

wifi

802.11 Definitions

- *Basic Service Set* (BSS)
  - Group of stations that *coordinate their access* using a given instance of MAC
  - Located in a *Basic Service Area* (BSA)
  - Stations in BSS can communicate with each other
  - Distinct collocated BSS's can coexist
- *Extended Service Set* (ESS)
  - Multiple BSSs interconnected by *Distribution System (DS)*
  - Each BSS is like a cell and stations in BSS communicate with an *Access Point* (AP)
  - *Portals* attached to DS provide access to Internet

Infrastructure Network

wifi most popular infrastructure mode

ESS

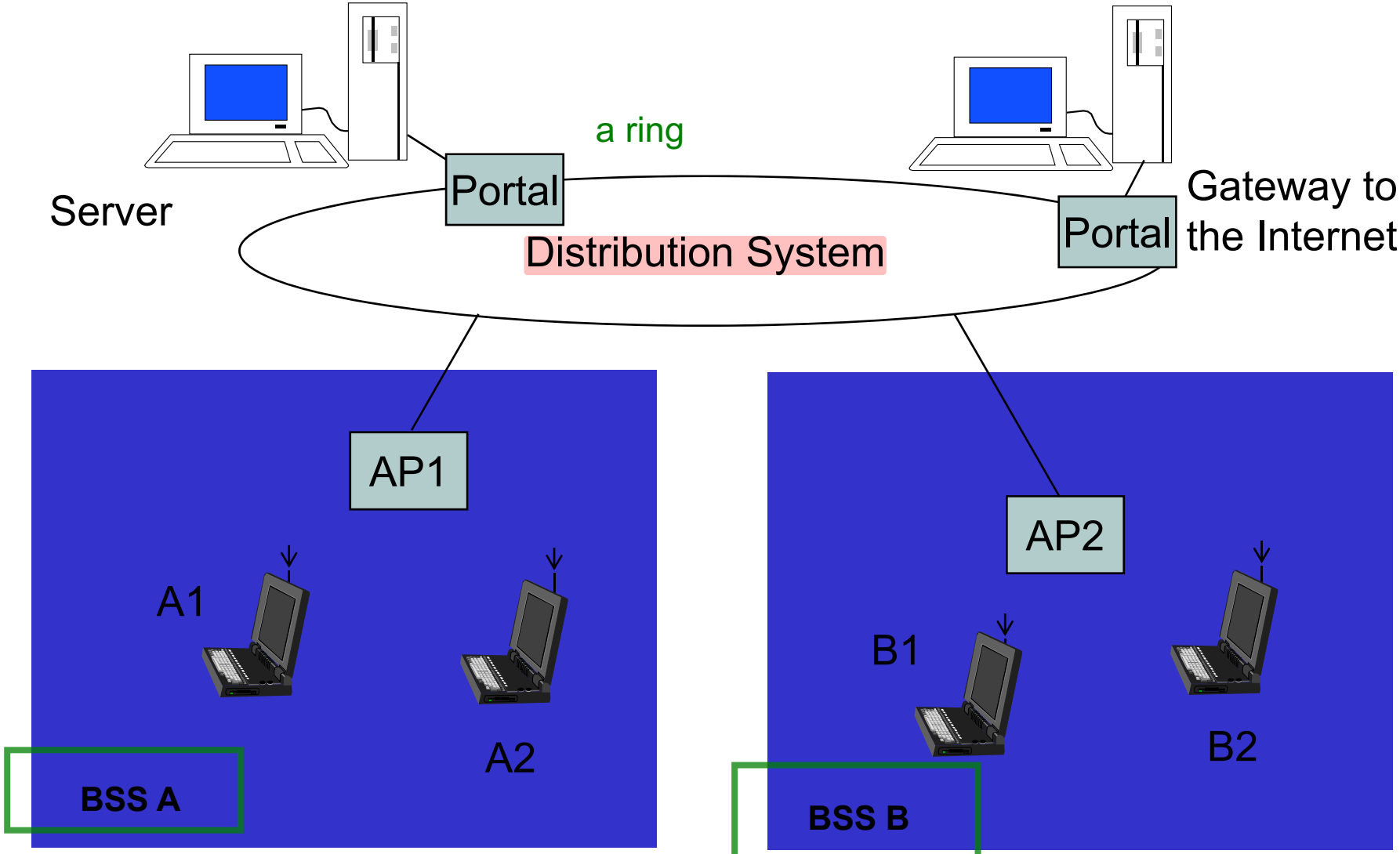

BSS is a kind of local area network

Ad Hoc Communications

- Temporary association of group of stations
  - Within range of each other
  - Need to exchange information
  - E.g. Presentation in meeting, or distributed computer game, or both

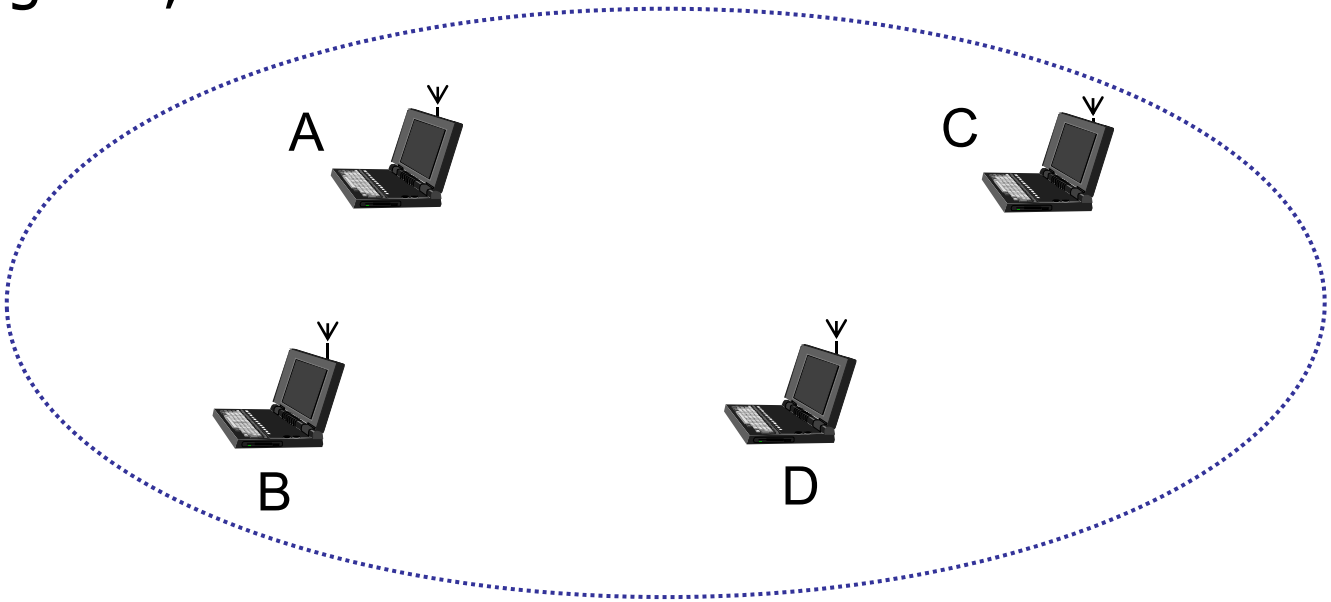

Distribution Services

- Stations within BSS can communicate directly with each other
- DS provides *distribution services*:
  - Transfer MAC SDUs between APs in ESS
  - Transfer MSDUs between portals & BSSs in ESS
  - Transfer MSDUs between stations in same BSS
    - Multicast, broadcast, or stations's preference
- ESS looks like single BSS to LLC layer

Infrastructure Services

- Select AP and establish *association* with AP
  - Then can send/receive frames via AP & DS
- *Reassociation service* to move from one AP to another AP
- *Dissociation service* to terminate association
- *Authentication service* to establish identity of other stations
- *Privacy service* to keep contents secret

IEEE 802.11 MAC

- MAC sublayer responsibilities
  - Channel access
  - PDU addressing, formatting, error checking
  - Fragmentation & reassembly of MAC SDUs
- MAC security service options
  - Authentication & privacy
- MAC management services
  - Roaming within ESS
  - Power management

MAC Services

- Contention Service: Best effort
- Contention-Free Service: time-bounded transfer
- MAC can alternate between Contention Periods (CPs) & Contention-Free Periods (CFPs)

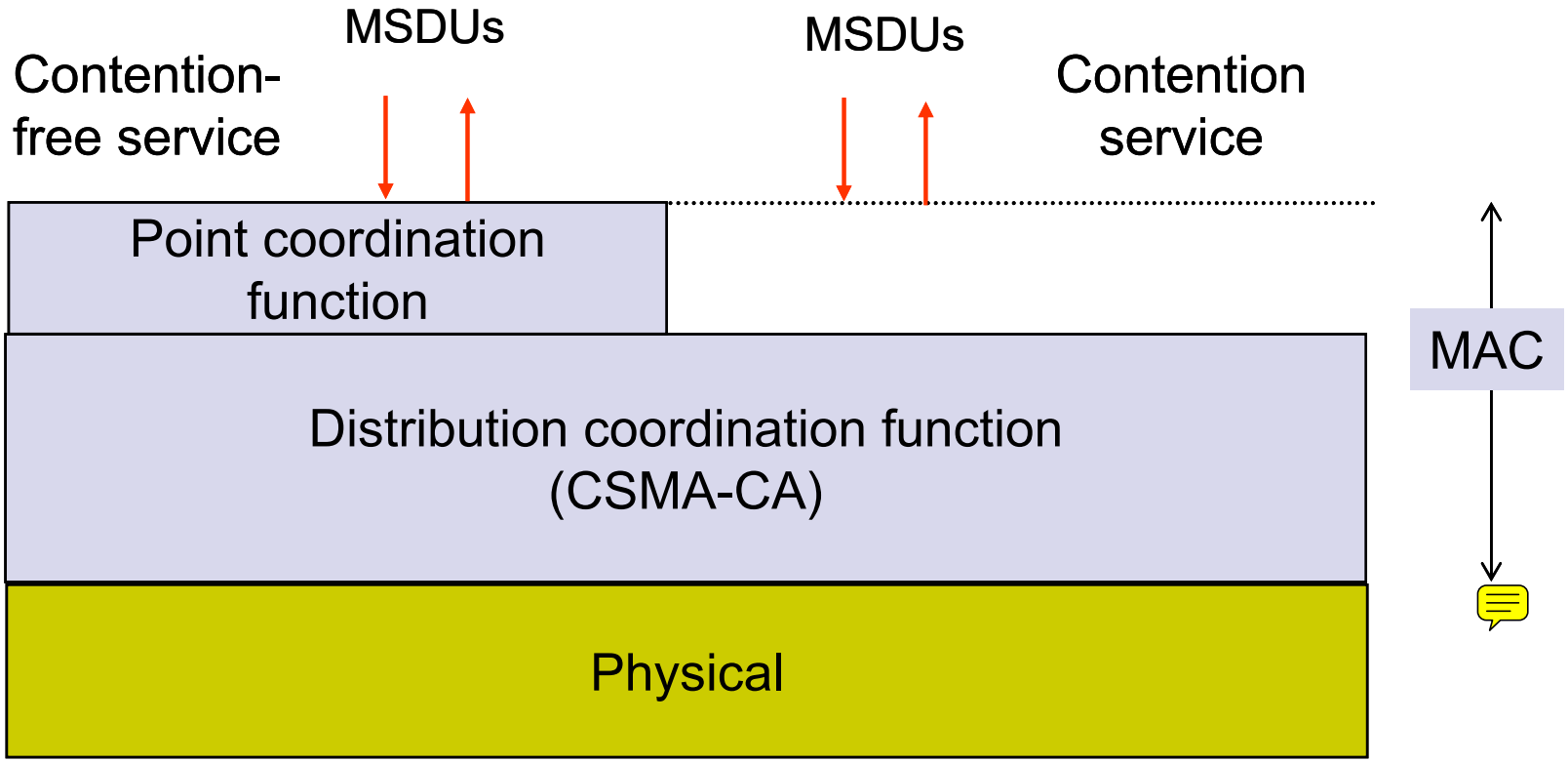

Distributed Coordination Function (DCF)

- DCF provides basic access service
  - Asynchronous best-effort data transfer
  - All stations contend for access to medium
- CSMA/CA
  - Ready stations wait for completion of transmission
  - All stations must wait *Interframe Space (IFS)*

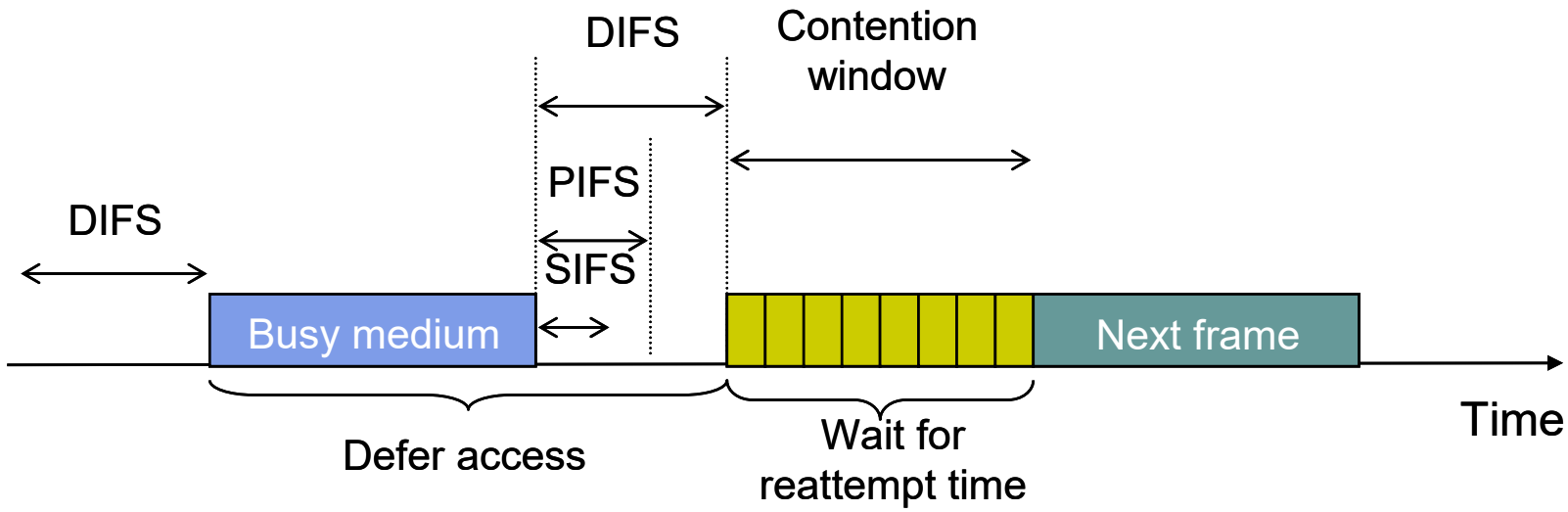

Carrier Sensing in 802.11

- *Physical Carrier Sensing*
  - Analyze all detected frames
  - Monitor relative signal strength from other sources
- *Virtual Carrier Sensing* at MAC sublayer
  - Source stations informs other stations of transmission time (in μsec) for an MPDU
  - Carried in *Duration* field of RTS & CTS
  - Stations adjust *Network Allocation Vector* to indicate when channel will become idle
- Channel busy if either sensing is busy

Contention & Backoff Behavior

- If channel is still idle after DIFS period, ready station can transmit an *initial* MPDU
- If channel becomes busy before DIFS, then station must schedule *backoff* time for reattempt
  - Backoff period is integer # of *idle contention time slots*
  - Waiting station monitors medium & decrements backoff timer each time an idle contention slot expires
  - Station can contend when backoff timer expires
- A station that completes a frame transmission is not allowed to transmit immediately
  - Must first perform a backoff procedure

Transmission of MPDU without RTS/CTS

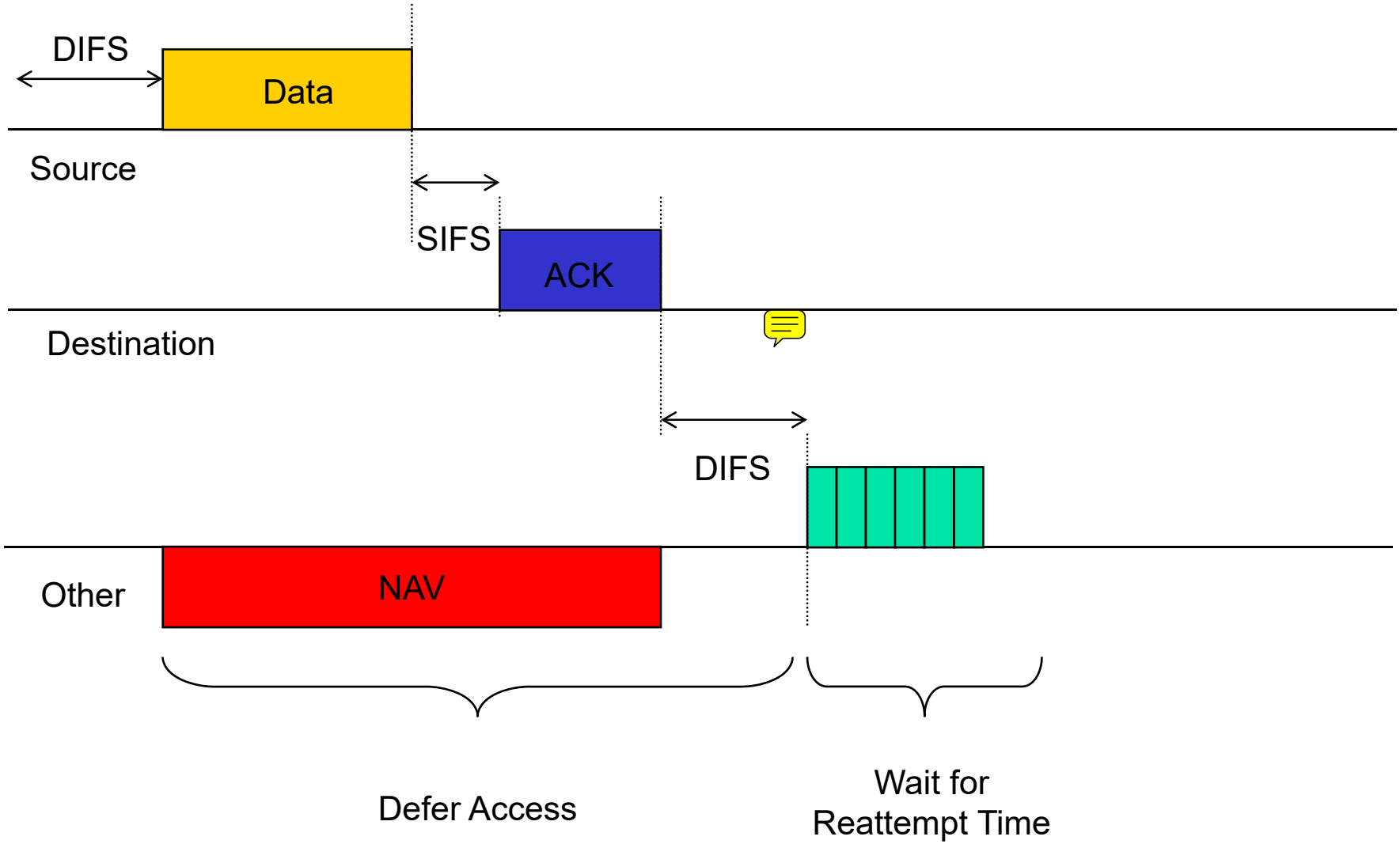

Transmission of MPDU with RTS/CTS

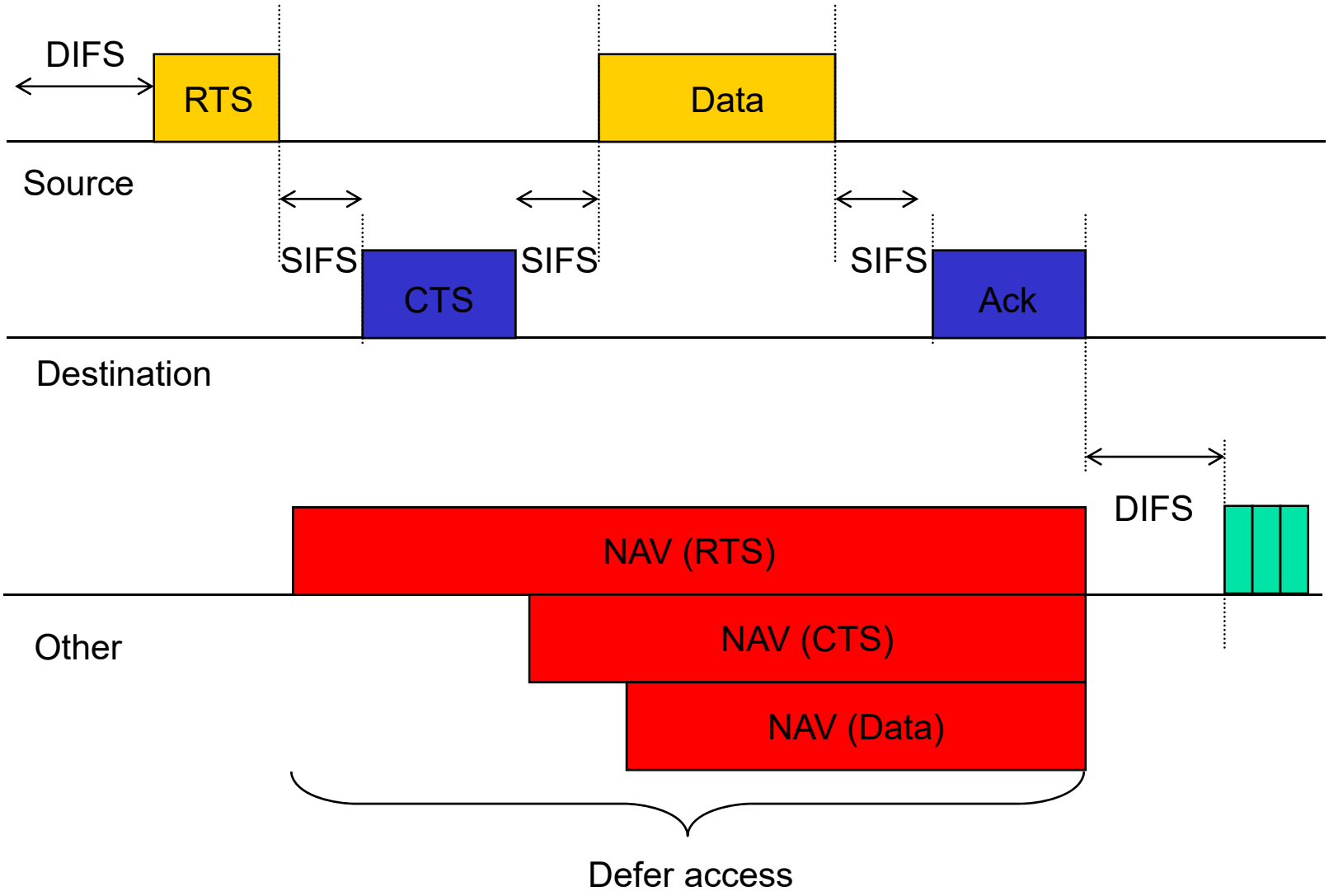

Collisions, Losses & Errors

- Collision Avoidance
  - When station senses channel busy, it waits until channel becomes idle for DIFS period & then begins random backoff time (in units of idle slots)
  - Station transmits frame when backoff timer expires
  - If collision occurs, recompute backoff over interval that is twice as long
  - *Use Ack and timeout to find out collision*
- Receiving stations of error-free frames send ACK
  - Sending station interprets non-arrival of ACK as loss
  - Executes backoff and then retransmits
  - Receiving stations use sequence numbers to identify duplicate frames

Hidden Terminal Problem

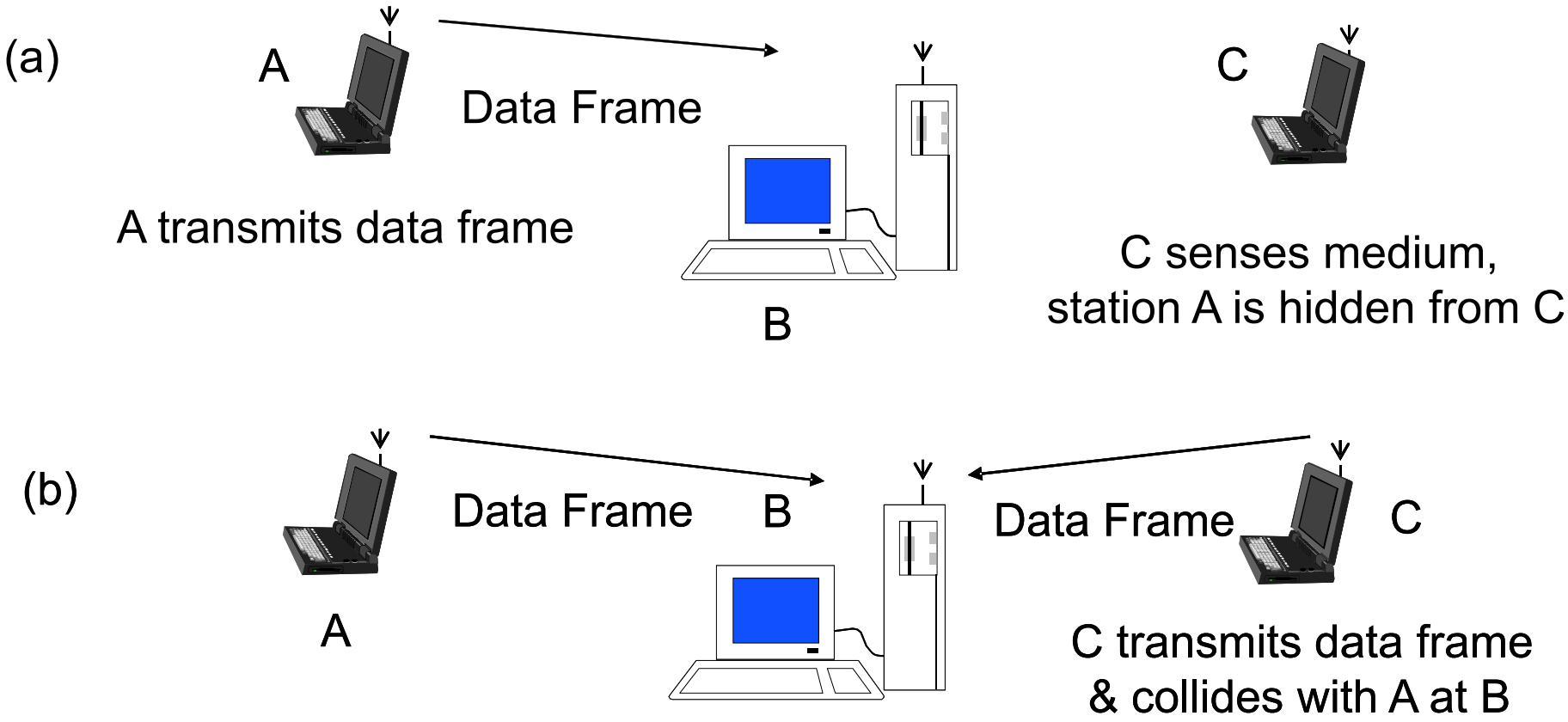

Collision avoidance and virtual carrier sensing

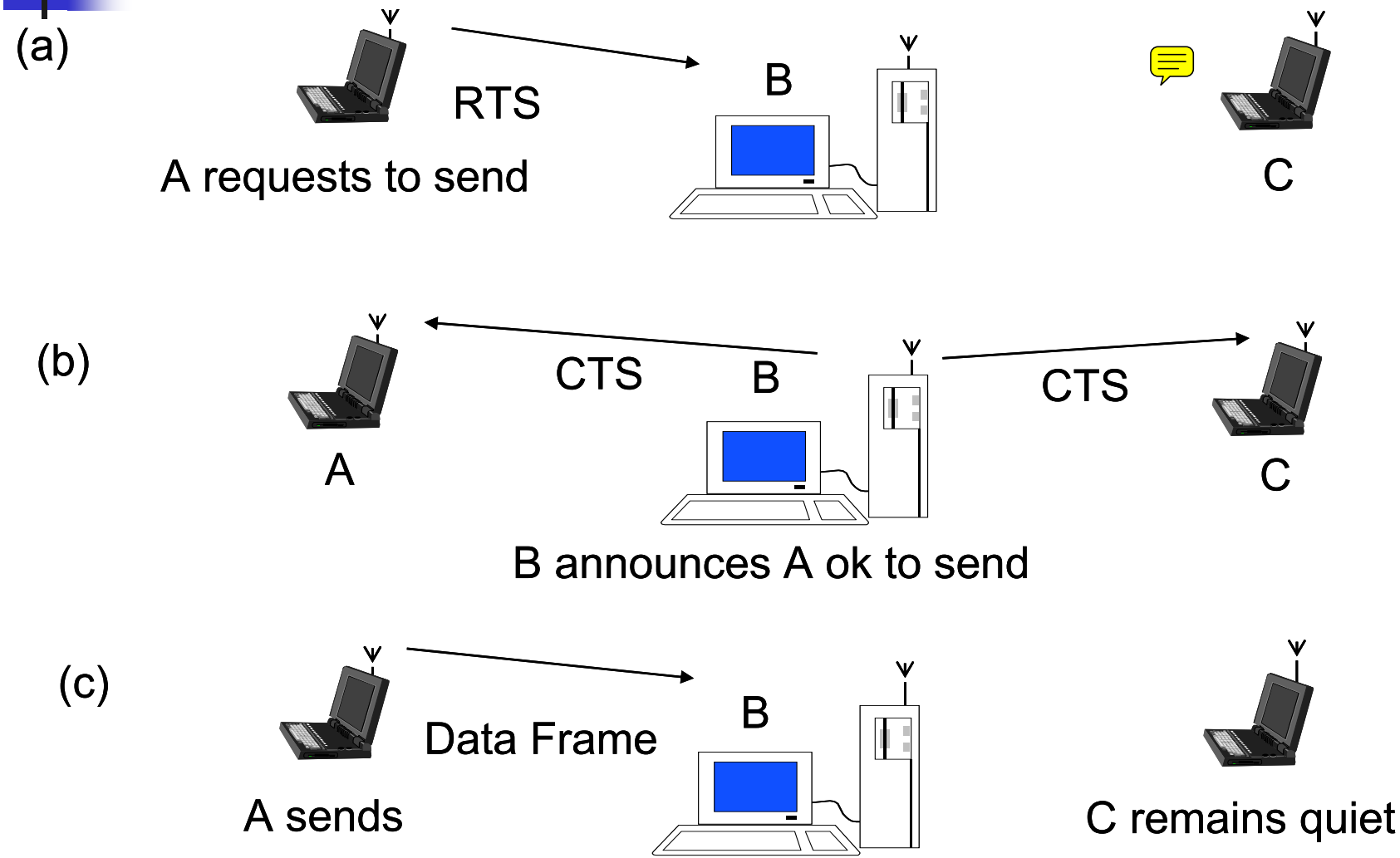

Point Coordination Function

- PCF provides connection-oriented, contention-free service through *polling*
- *Point coordinator (PC)* in AP performs PCF
- Polling table up to implementor
- CFP repetition interval
  - Determines frequency with which CFP occurs
  - Initiated by *beacon frame* transmitted by PC in AP
  - Contains CFP and CP
  - During CFP stations may only transmit to respond to a poll from PC or to send ACK

PCF Frame Transfer

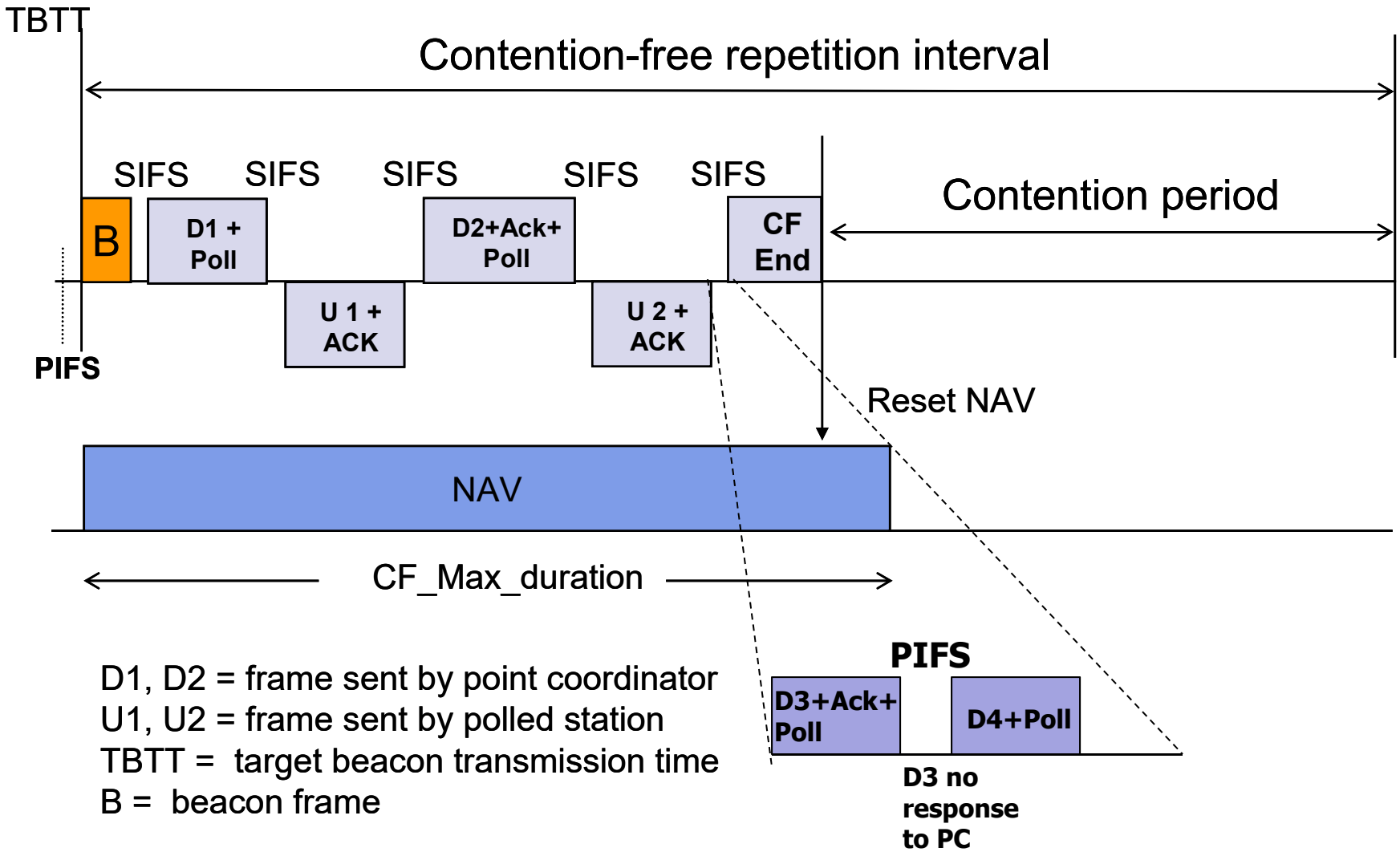

D1, D2 = frame sent by point coordinator
U1, U2 = frame sent by polled station
TBTT = target beacon transmission time
B = beacon frame

Frame Types

- Management frames
  - Station association & disassociation with AP
  - Timing & synchronization
  - Authentication & deauthentication
- Control frames
  - Handshaking
  - ACKs during data transfer
- Data frames
  - Data transfer

Frame Structure

- MAC Header: 30 bytes
- Frame Body: 0-2312 bytes
- CRC: CCITT-32 4 bytes CRC over MAC header & frame body

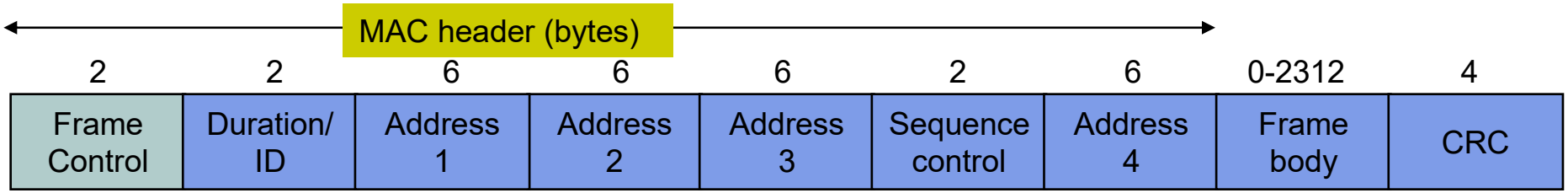

Frame Control (1)

- Protocol version = 0
- Type: Management (00), Control (01), Data (10)
- Subtype within frame type
- Type=00, subtype=association; Type=01, subtype=ACK
- MoreFrag=1 if another fragment of MSDU to follow

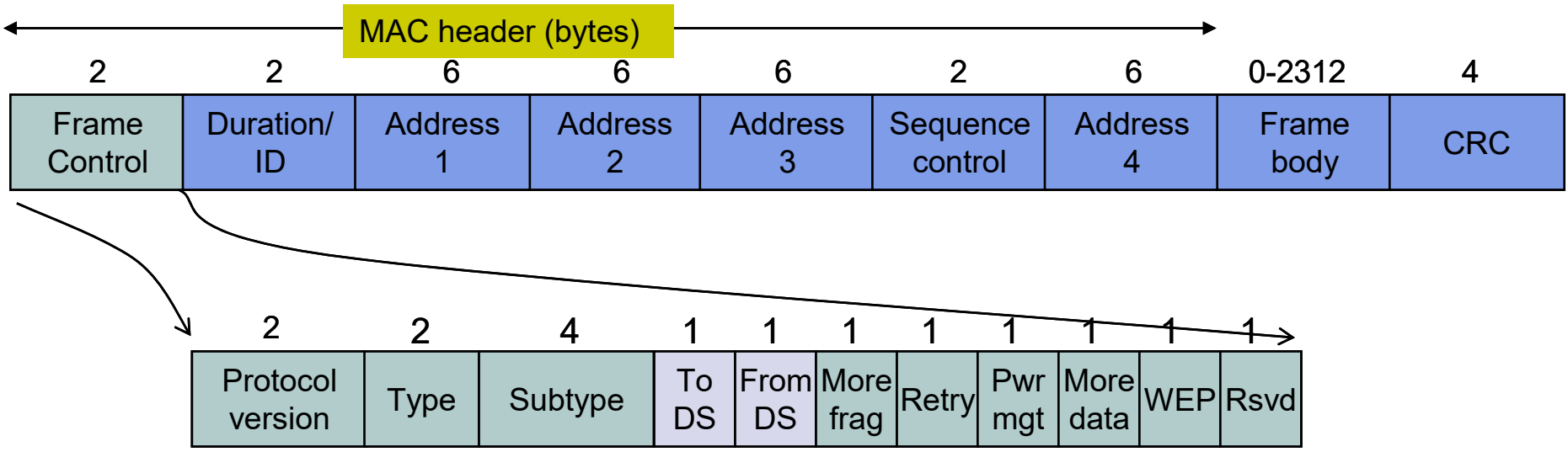

Frame Control (2)

2	2	6	6	6	2	6	0-2312	4
Frame Control	Duration/ ID	Address 1	Address 2	Address 3	Sequence control	Address 4	Frame body	CRC

2	2	4	1	1	1	1	1	1	1	1
Protocol version	Type	Subtype	To DS	From DS	More frag	Retry	Pwr mgt	More data	WEP	Rsvd

To DS	From DS	Address 1	Address 2	Address 3	Address 4	Meaning
0	0	Destination address	Source address	BSSID	N/A	Data frame from station to station within a BSS
0	1	Destination address	BSSID	Source address	N/A	Data frame exiting the DS
1	0	BSSID	Source address	Destination address	N/A	Data frame destined for the DS
1	1	Receiver address	Transmitter address	Destination address	Source address	WDS frame being distributed from AP to AP

To DS = 1 if frame goes to DS; From DS = 1 if frame exiting DS

Frame Control (3)

- Retry=1 if a data/management frame is a retransmission
- Power Management used to put station in/out of sleep mode
- More Data =1 to tell station in power-save mode more data buffered for it at AP
- WEP=1 if frame body encrypted

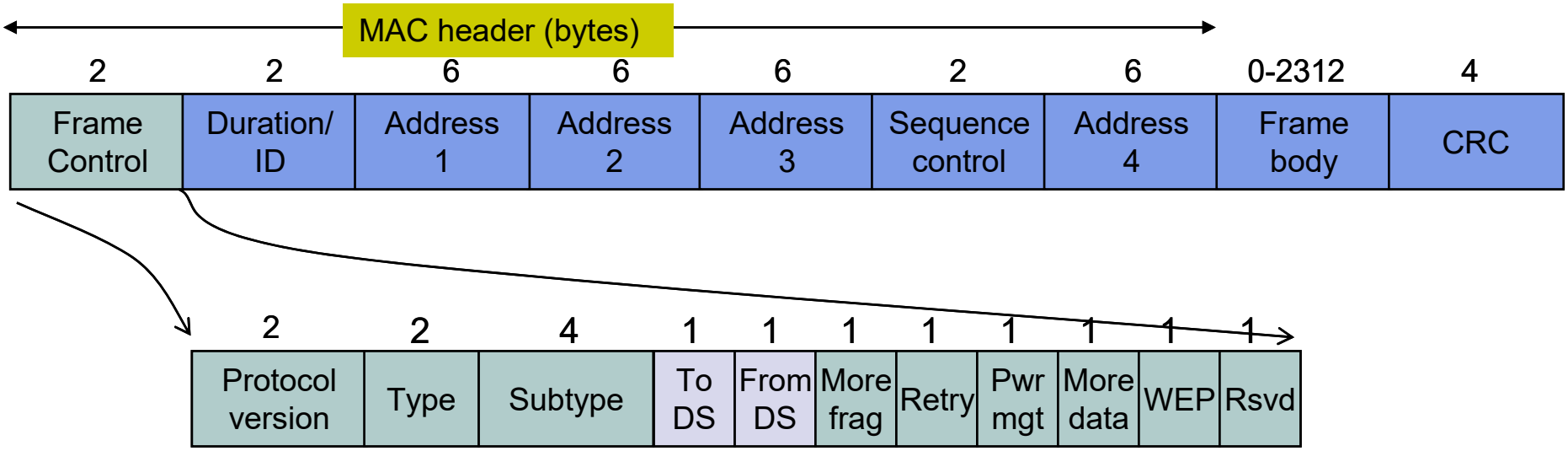

802.11 protocol layers

- 802.11 designed to
  - Support LLC
  - Operate over many physical layers

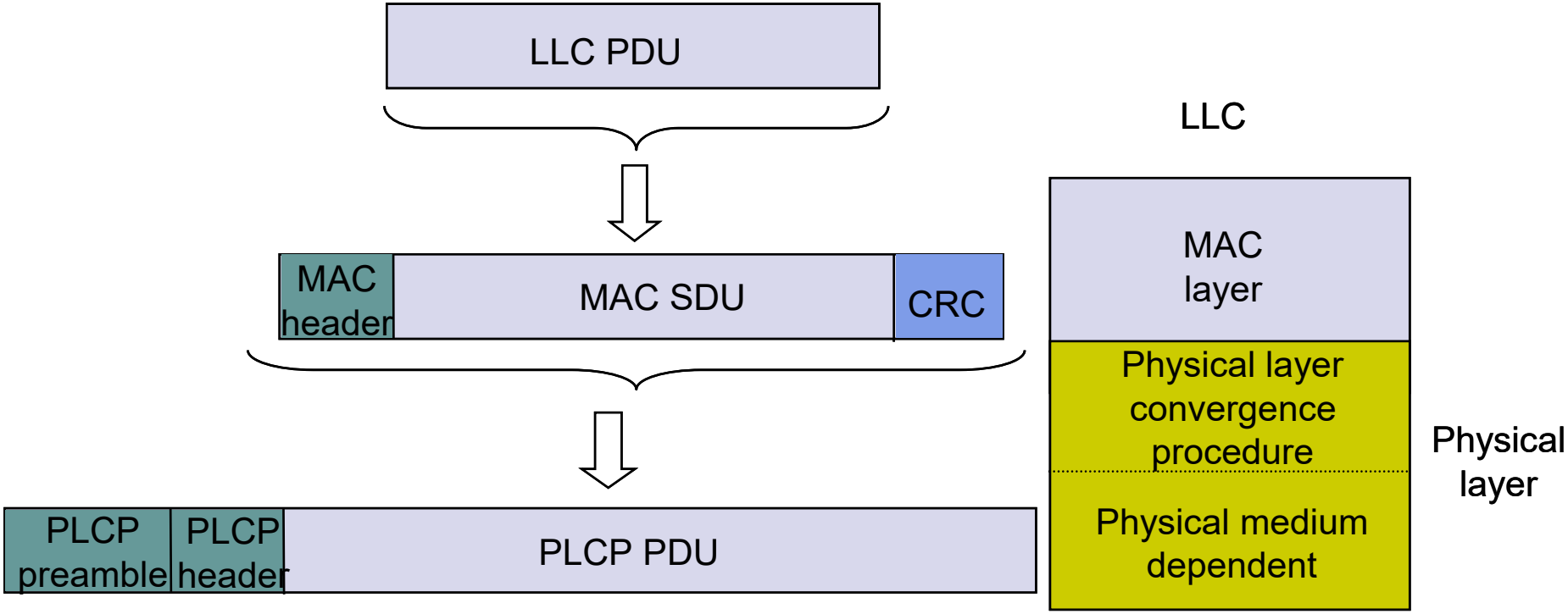

802.11 Phy options

	Frequency Band	Bit Rate	Modulation Scheme
802.11	2.4 GHz	1-2 Mbps	Frequency-Hopping Spread Spectrum, Direct Sequence Spread Spectrum
802.11b	2.4 GHz	11 Mbps	Complementary Code Keying & QPSK
802.11g	2.4 GHz	54 Mbps	Orthogonal Frequency Division Multiplexing & CCK for backward compatibility with 802.11b
802.11a	5-6 GHz	54 Mbps	Orthogonal Frequency Division Multiplexing

802.16 and WiMAX

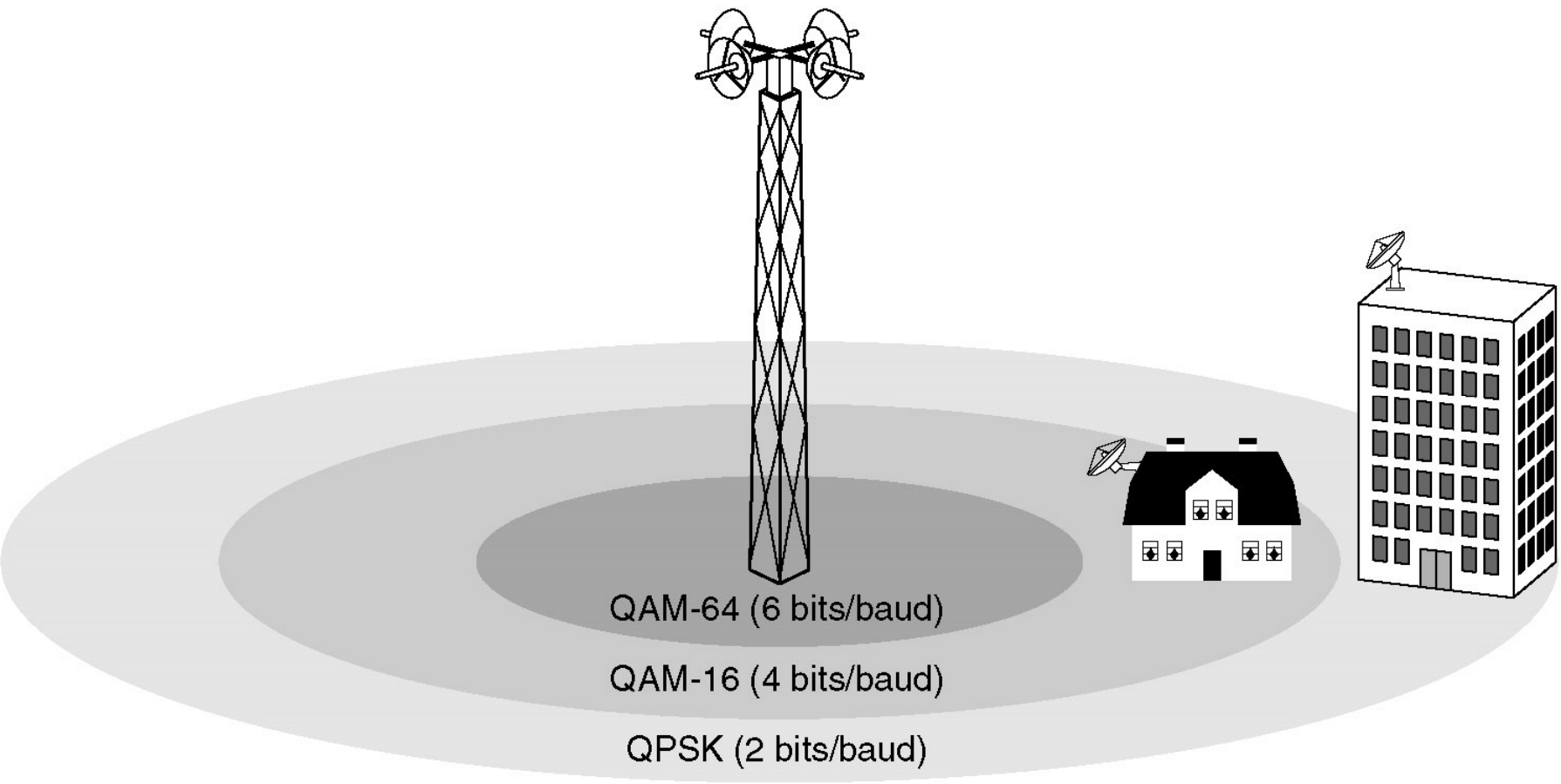

802.16 Protocol Stack

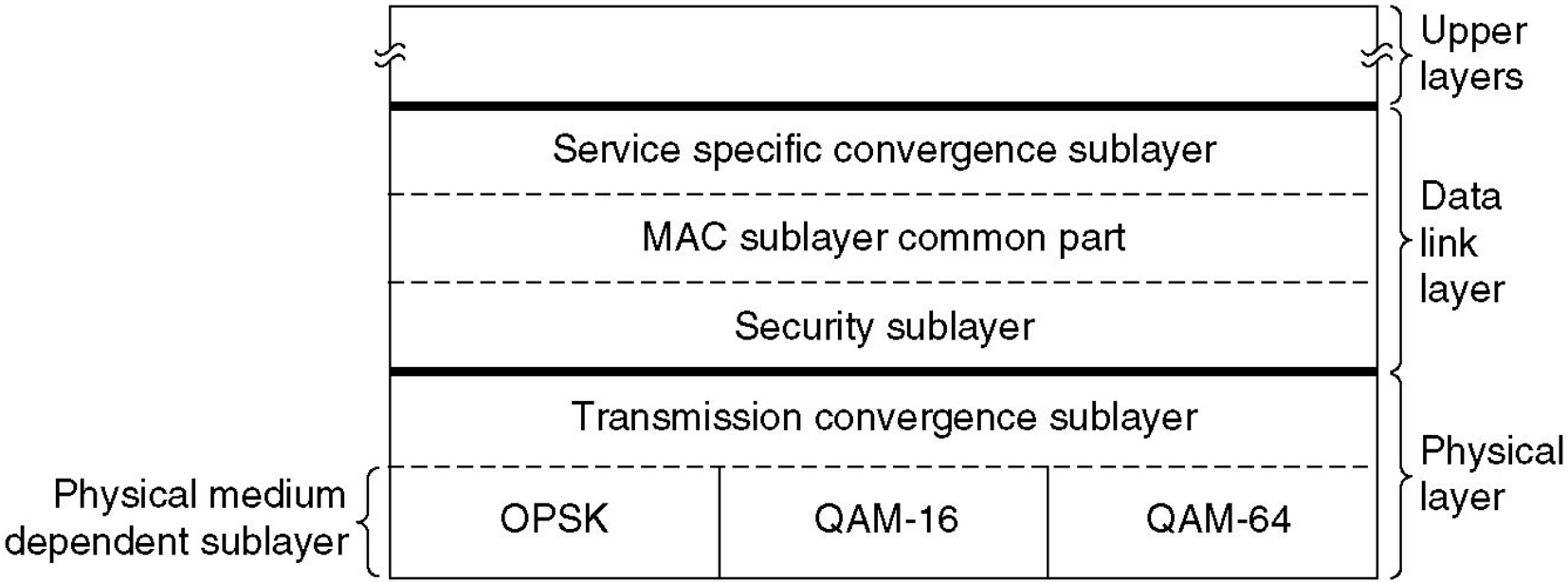

Services and Frame Structure

- Constant bit rate service
- Real-time variable bit rate service
- Non-real-time variable bit rate service
- Best efforts service

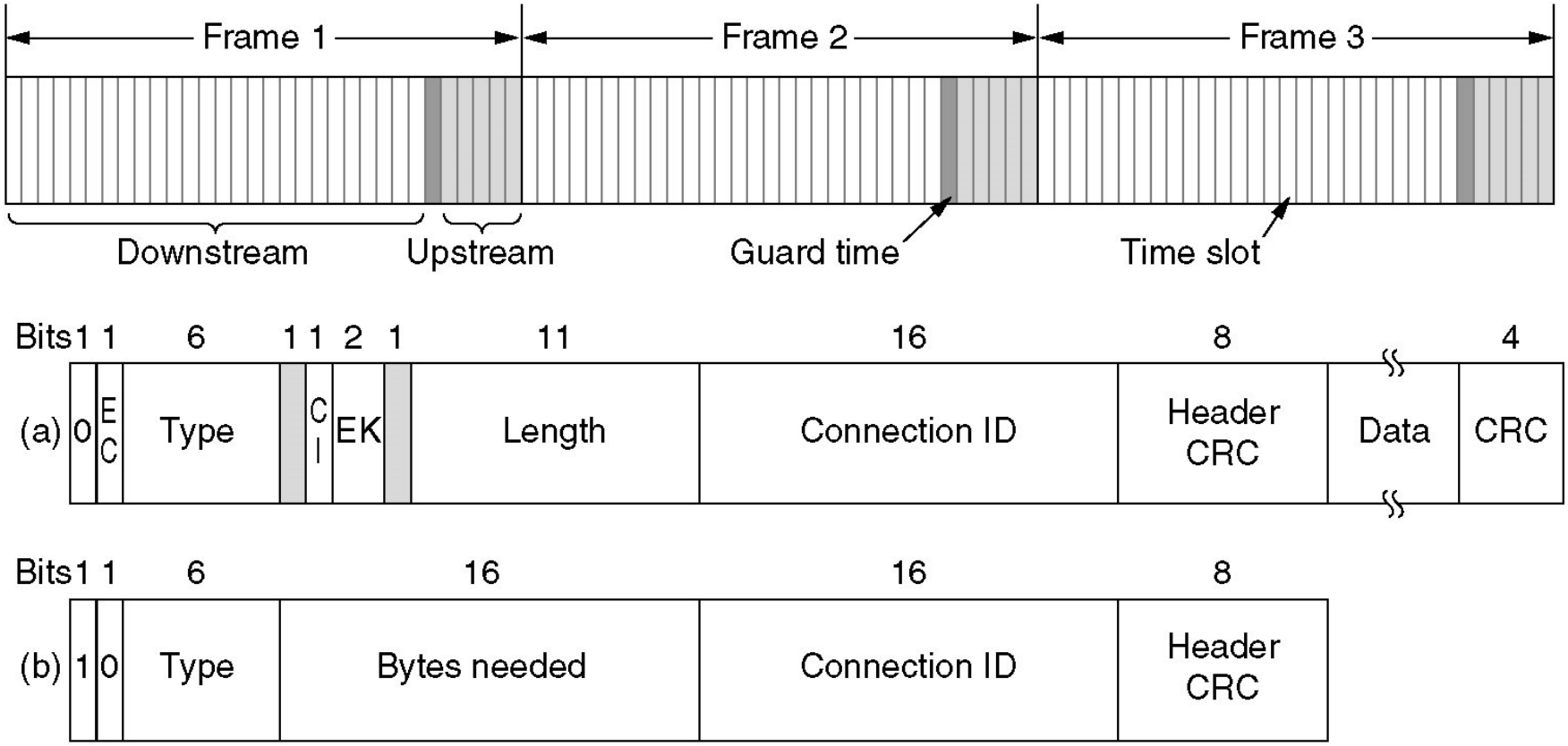

(a) A generic frame. (b) A bandwidth request frame.

Bluetooth

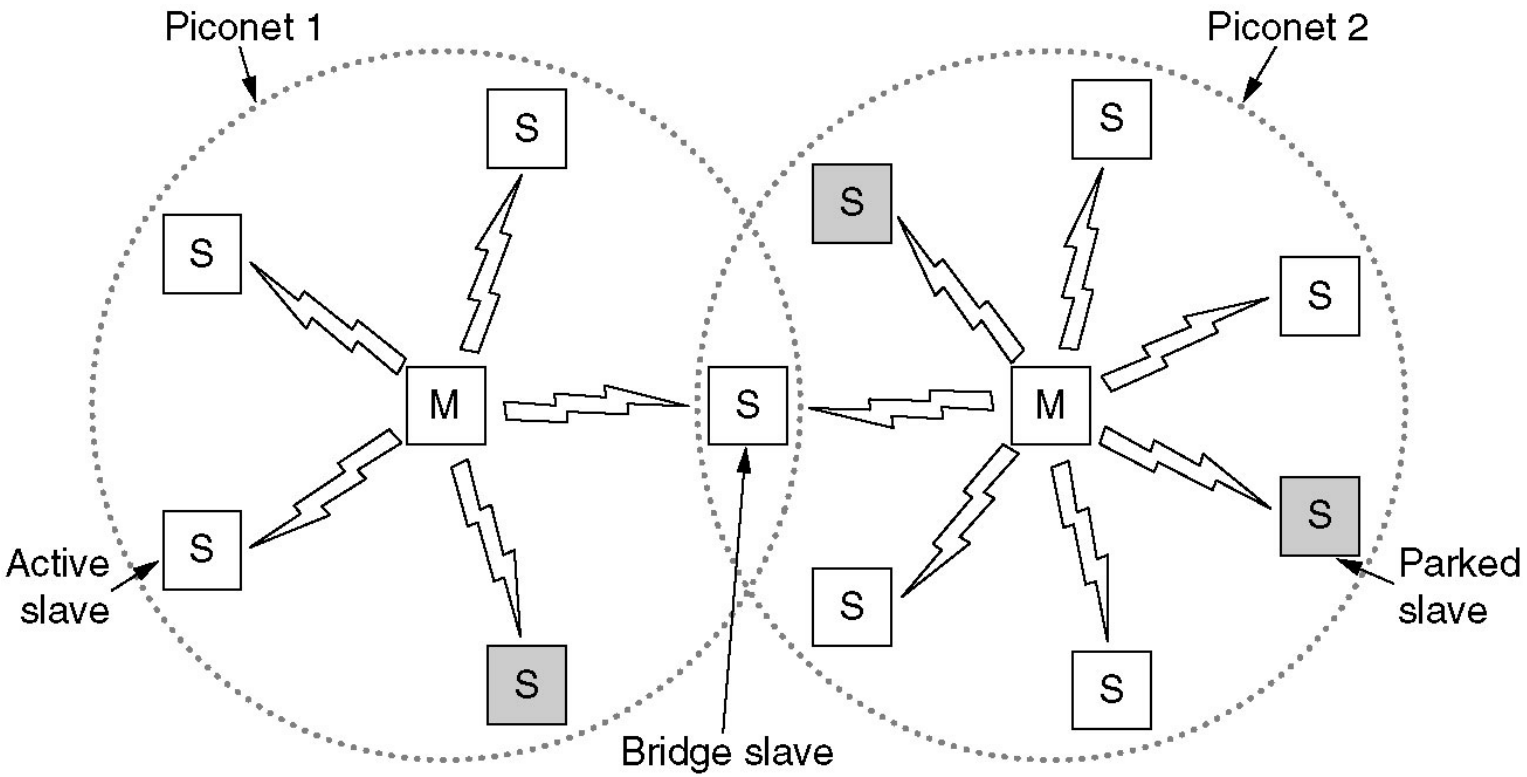
Piconet 1
Piconet 2
S
M
Active slave
Parked slave
Bridge slave

Bluetooth Protocol Stack

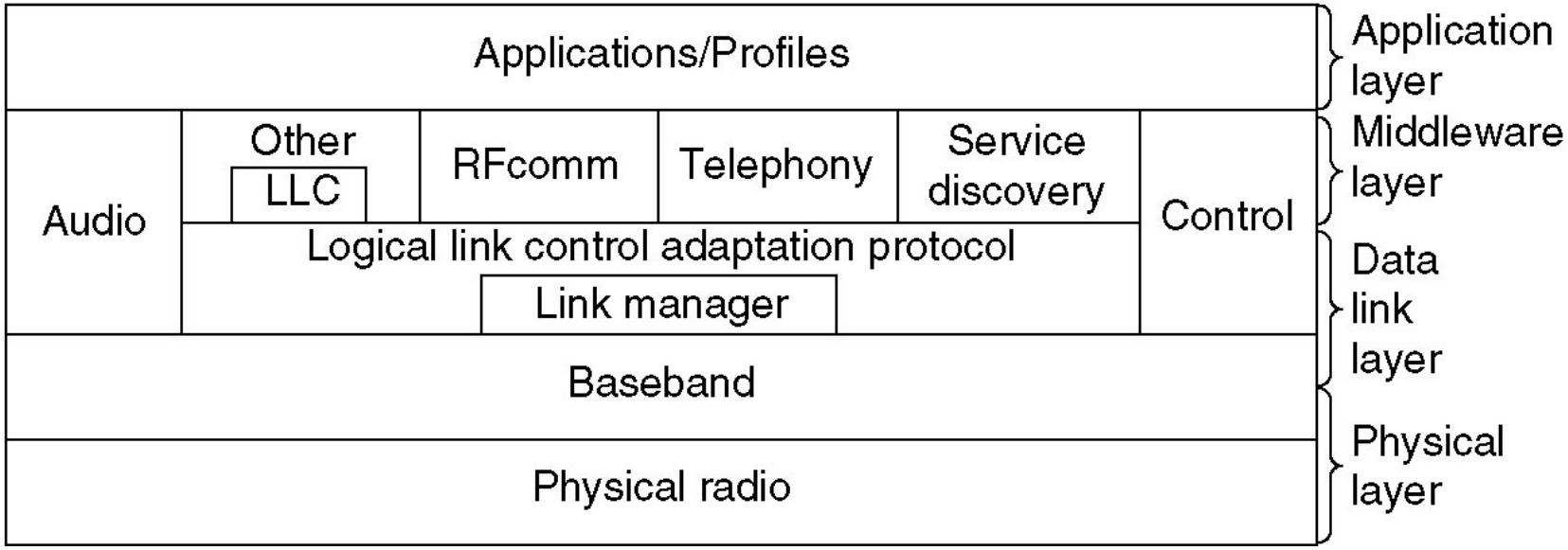

Bluetooth Frame Structure

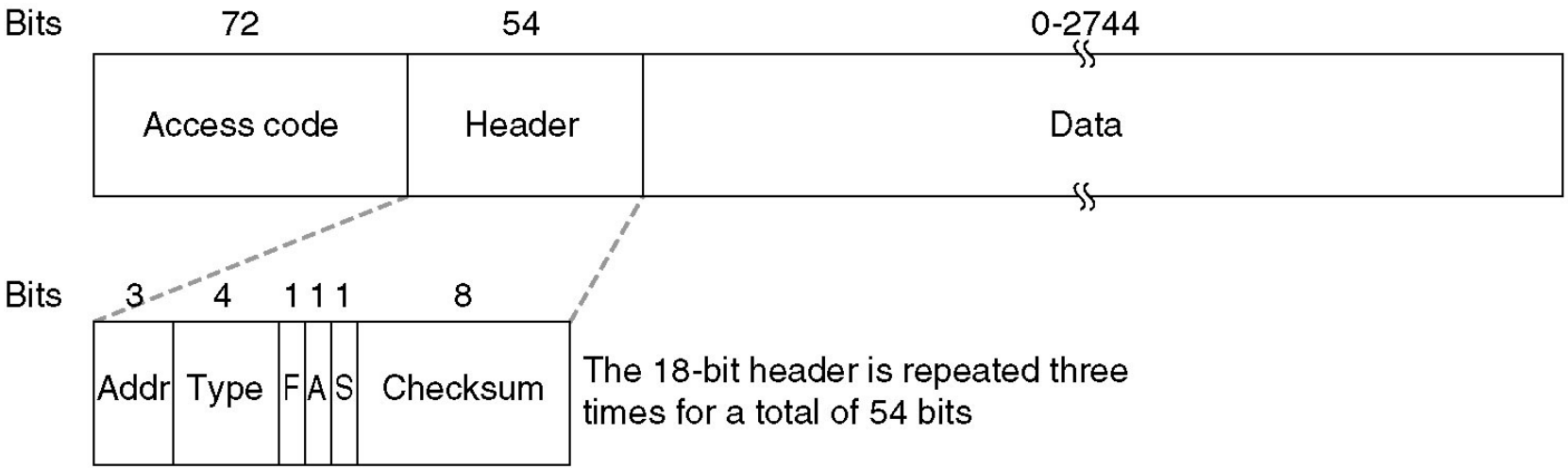

Bridging and Switching

Hubs, Bridges & Routers

- Interconnecting Hubs
  - Repeater: Signal regeneration
    - Physical layer interconnection; all traffic appears in both LANs
  - Bridge: MAC address filtering
    - MAC/link layer interconnection; local traffic stays in own LAN
  - Routers: Internet routing
    - Network layer interconnection; traffic crosses different networks
  - Gateway: router with additional functions
    - Backhaul access, protocol conversion, security (firewall) functions

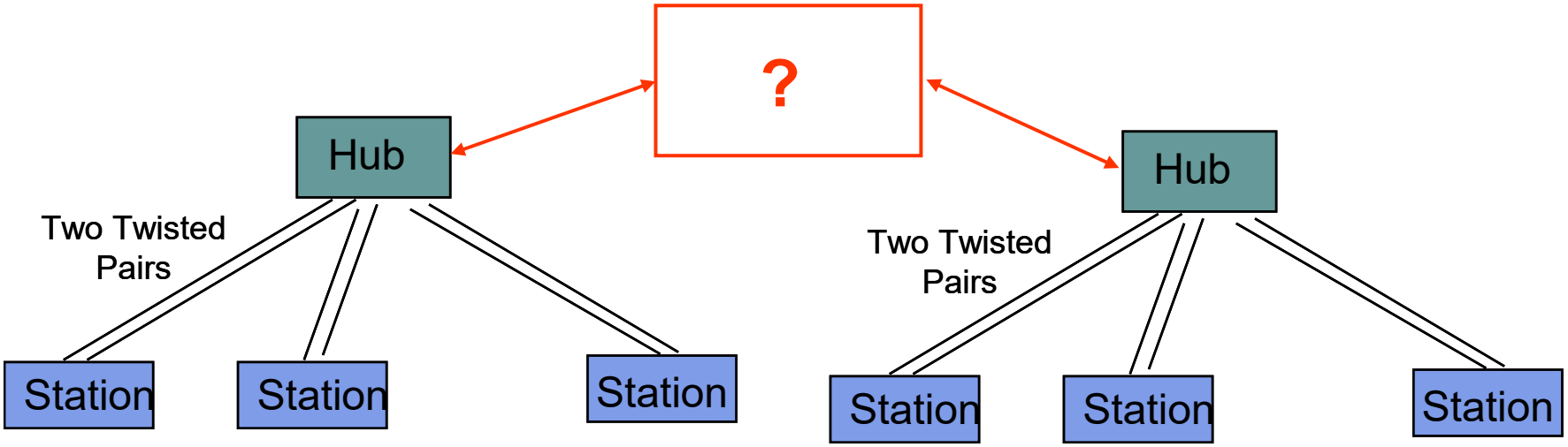

General Bridge Issues

- Operation at data link level implies capability to work with multiple network layers
- However, must deal with
  - Difference in MAC formats
  - Difference in data rates; buffering; timers
  - Difference in maximum frame length

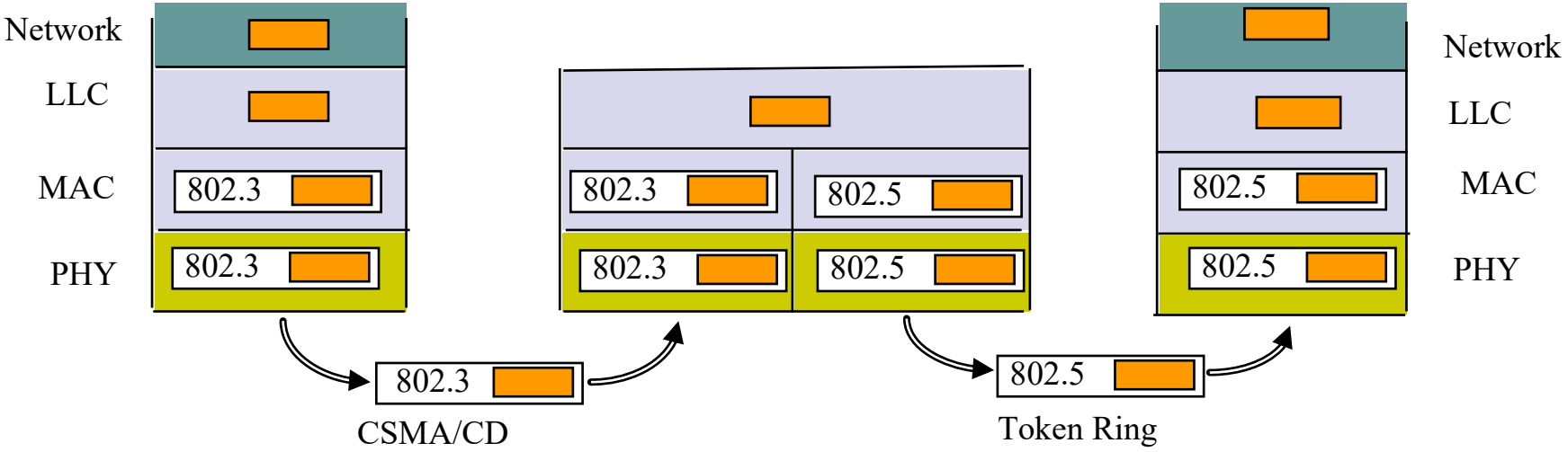

Transparent Bridges

- Interconnection of IEEE LANs with complete transparency
- Use table lookup, and
  - discard frame, if source & destination in same LAN
  - forward frame, if source & destination in different LAN
  - use flooding, if destination unknown
- Use backward learning to build table
  - observe source address of arriving LANs
  - handle topology changes by removing old entries

Example: Basic learning procedures

S4→S3

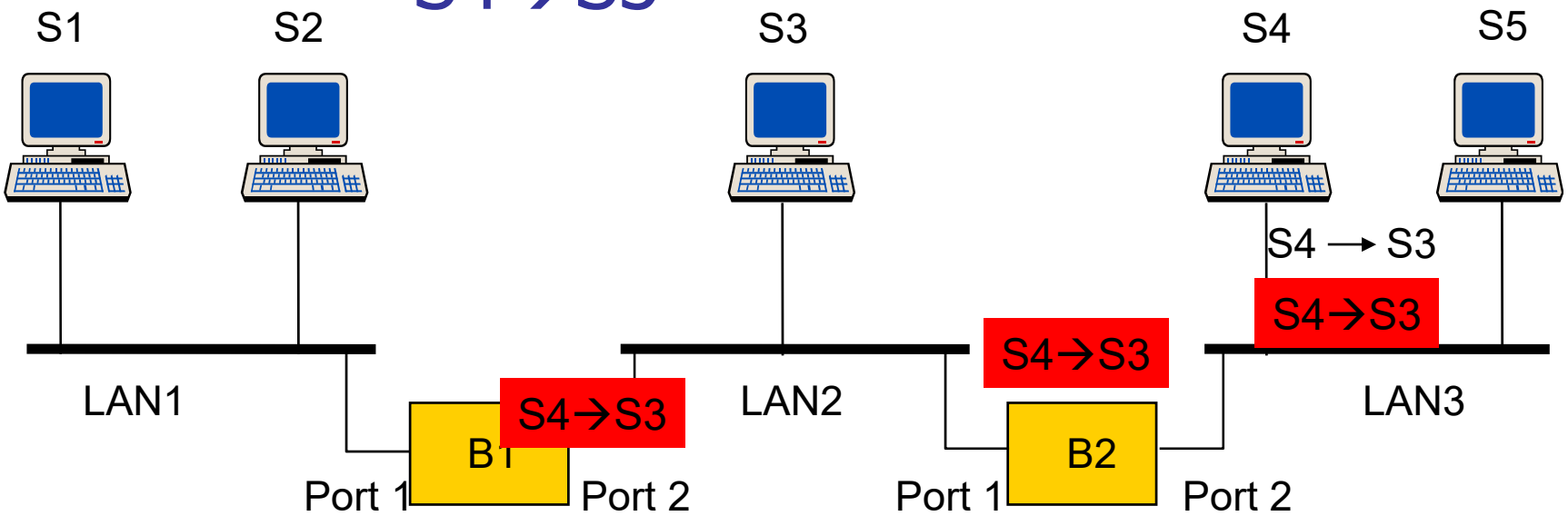

Address	Port
S1	1
S3	2
S4	2

Address	Port
S1	1
S3	1
S4	2

Adaptive Learning

- In a static network, tables eventually store all addresses & learning stops
- In practice, stations are added & moved all the time
  - Introduce timer (minutes) to age each entry & force it to be relearned periodically
  - If a frame arrives on port that differs from frame address & port in table, update the table immediately

Spanning Tree Algorithm

1. Select a *root bridge* among all the bridges.
   - root bridge = the lowest bridge ID.
2. Determine the *root port* for each bridge except the root bridge
   - root port = port with the least-cost path to the root bridge
3. Select a *designated bridge* for each LAN
   - designated bridge = bridge has least-cost path from the LAN to the root bridge.
   - *designated port* connects the LAN and the designated bridge
4. All root ports and all designated ports are placed into a "forwarding" state. These are the only ports that are allowed to forward frames. The other ports are placed into a "blocking" state.

Example (1)

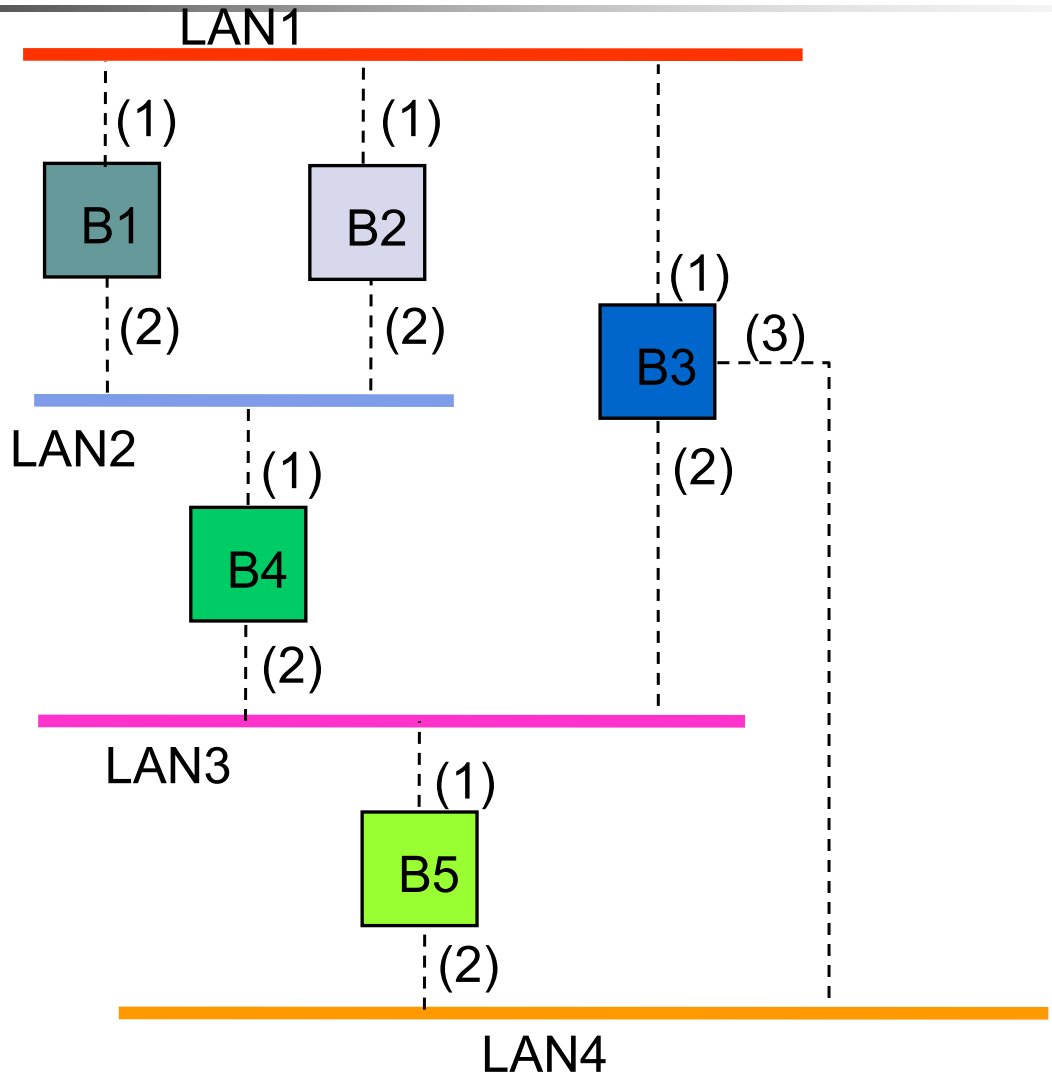

Example (2)

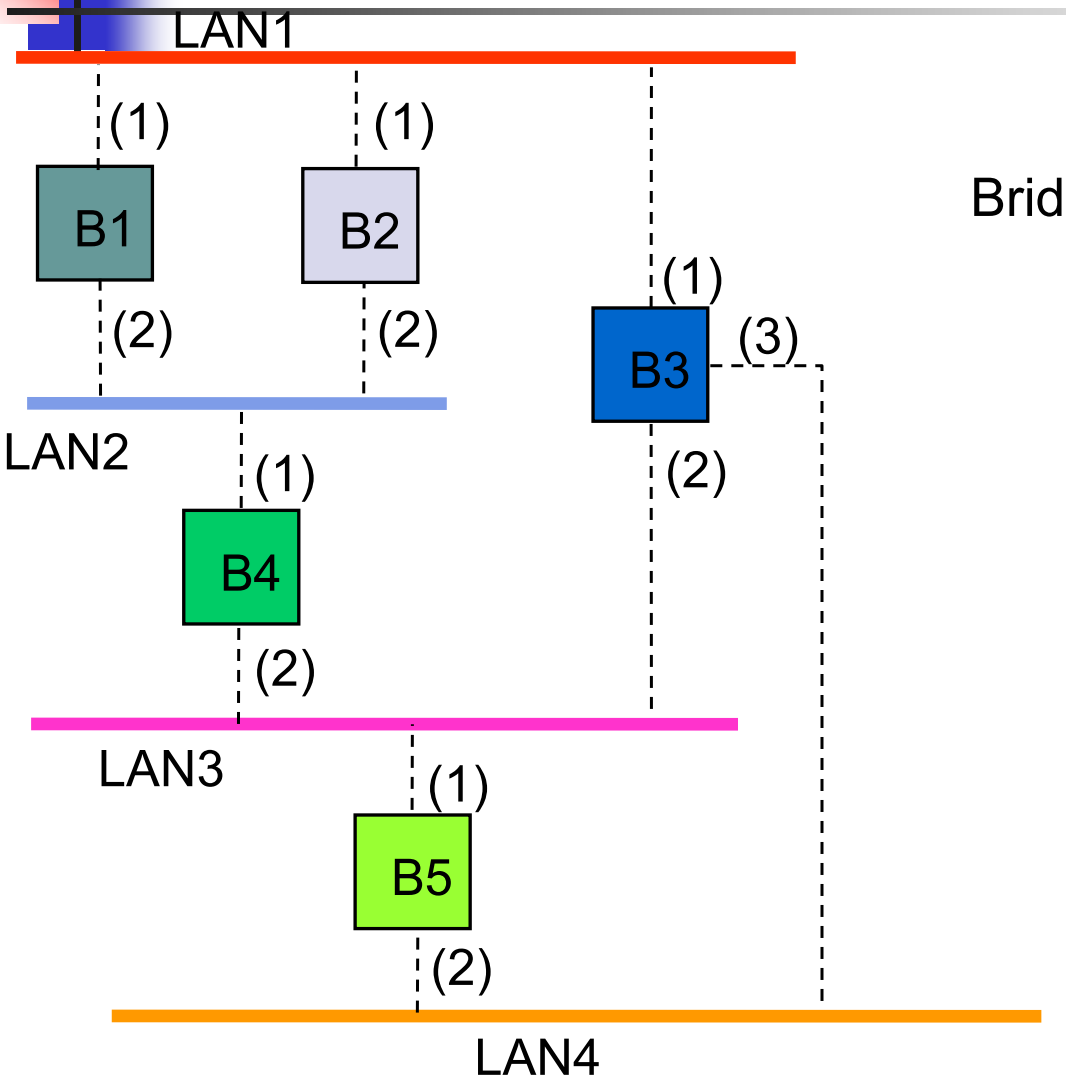

Bridge 1 selected as root bridge

Example (3)

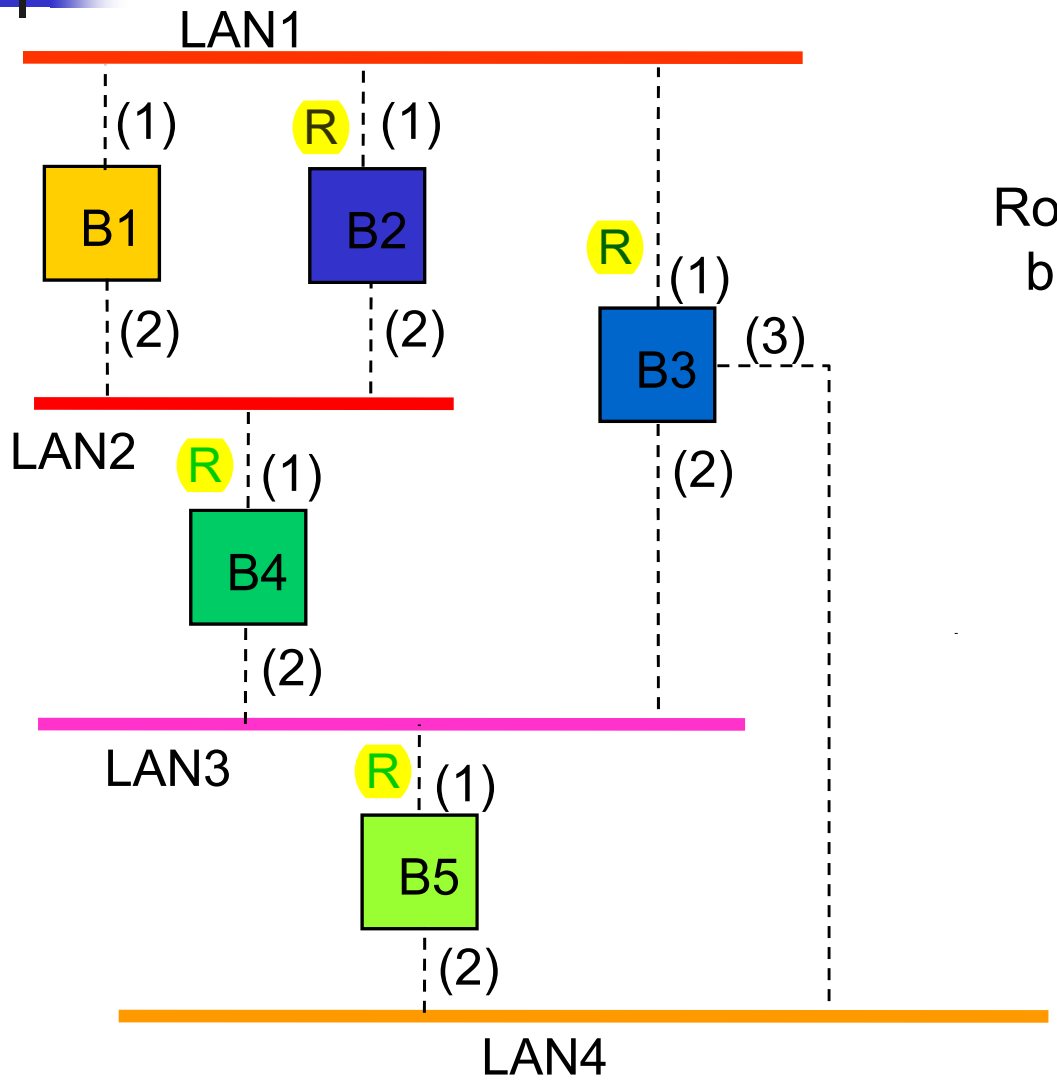

Root port selected for every bridge except root bridge

Example (4)

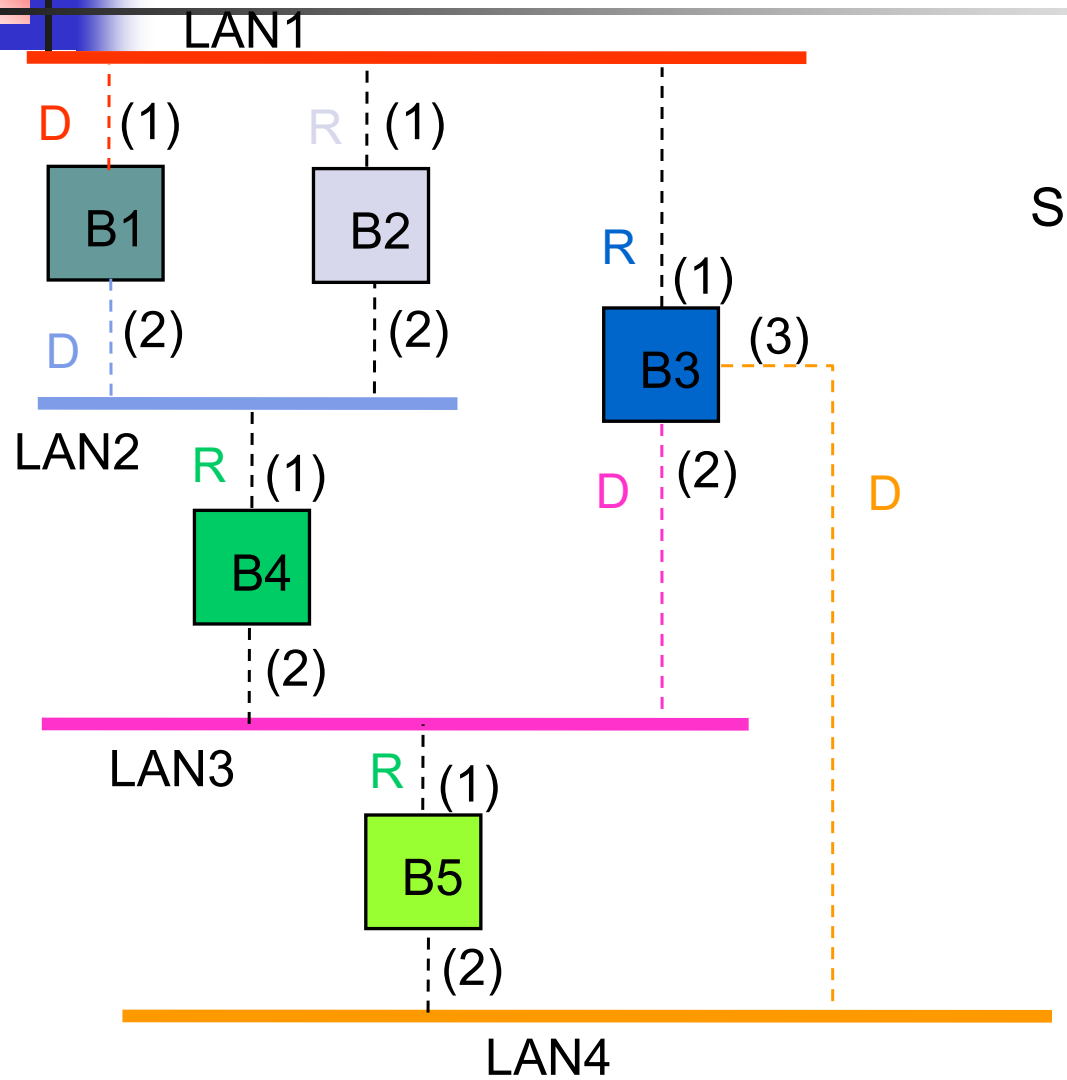

Select designated bridge for each LAN

Example (5)

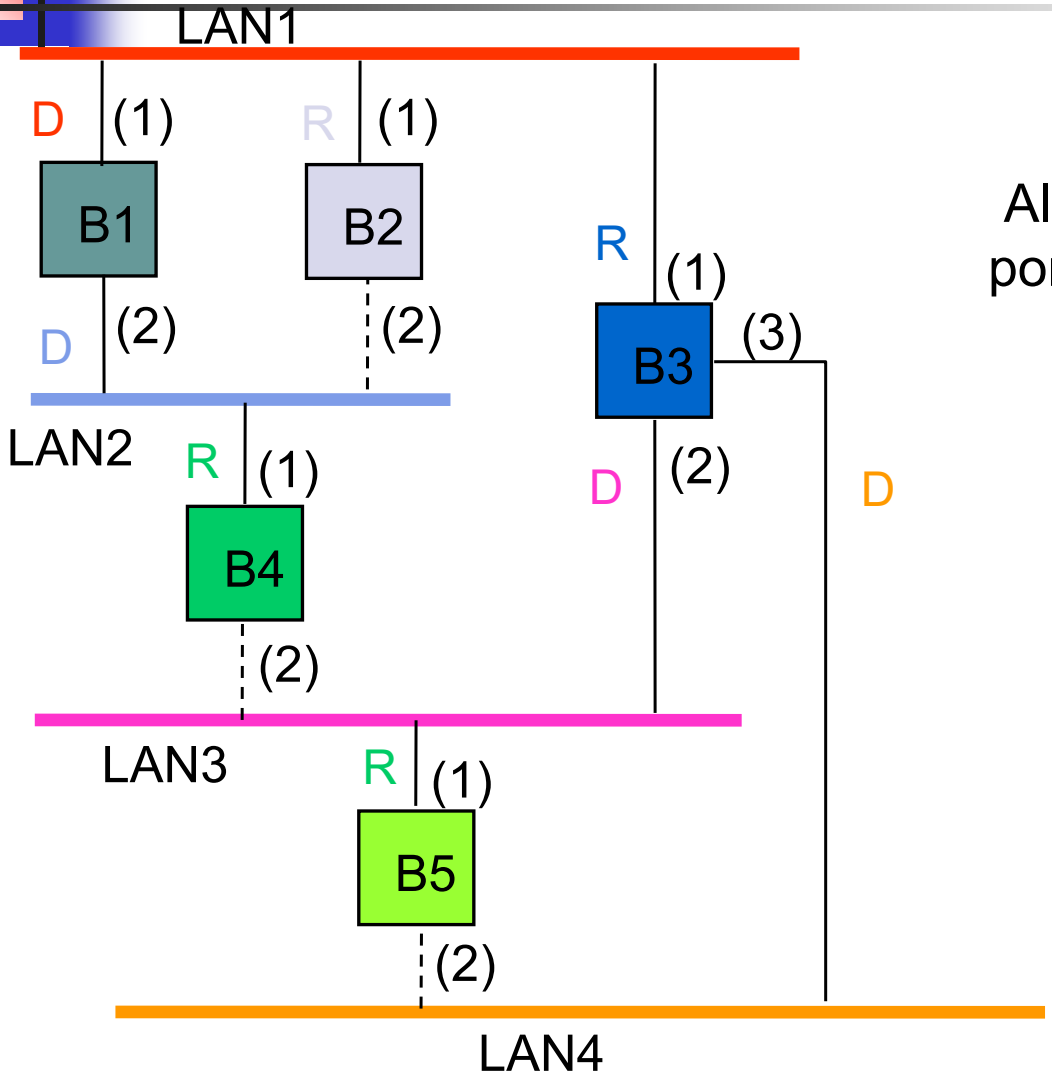

All root ports & designated ports put in forwarding state

Virtual LAN

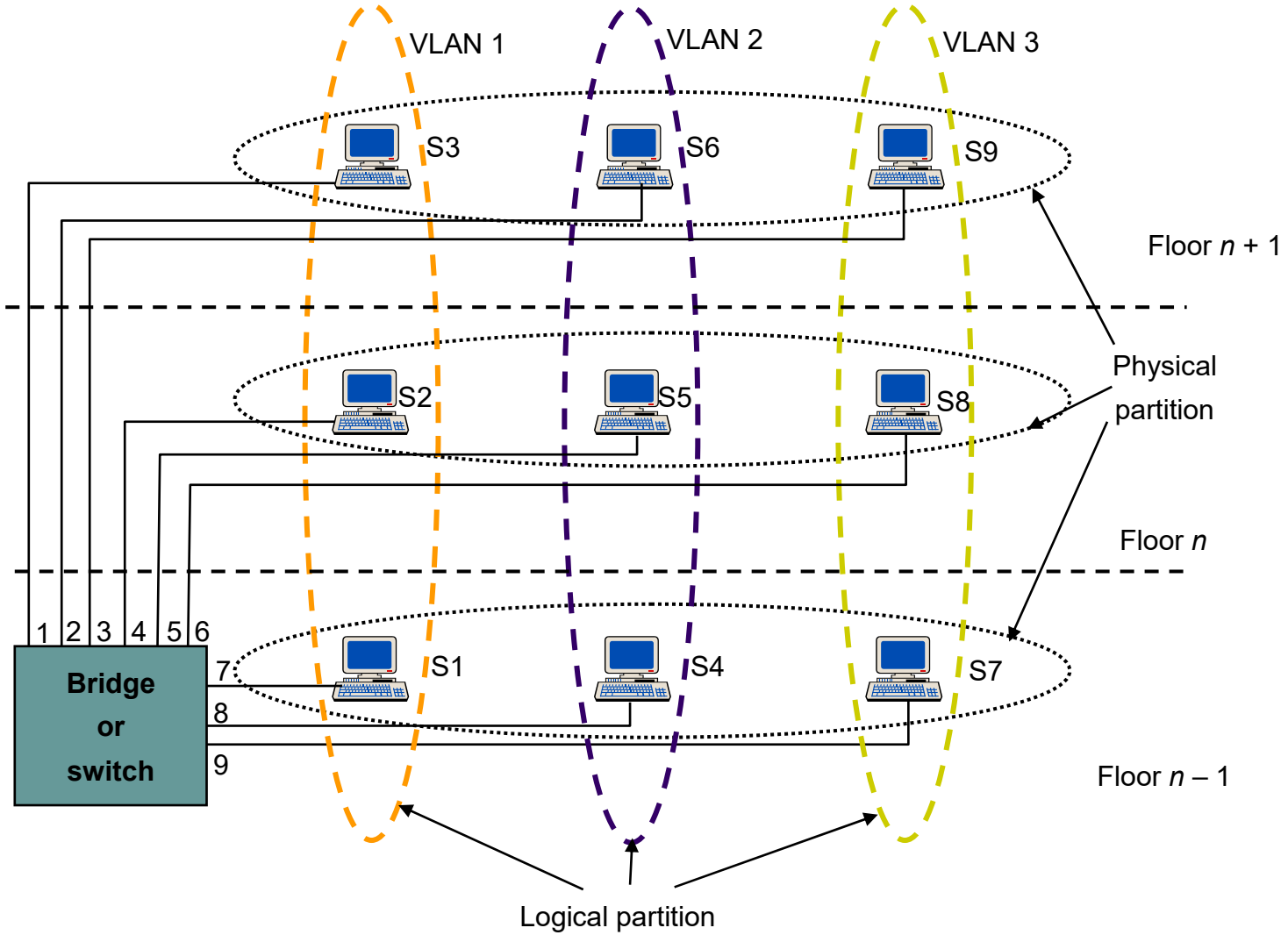
VLAN 1
VLAN 2
VLAN 3
S3
S6
S9
Floor n + 1
S2
S5
S8
Physical
partition
Floor n
1 2 3 4 5 6
Bridge
or
switch
7
8
9
S1
S4
S7
Floor n – 1
Logical partition

Per-Port VLANs

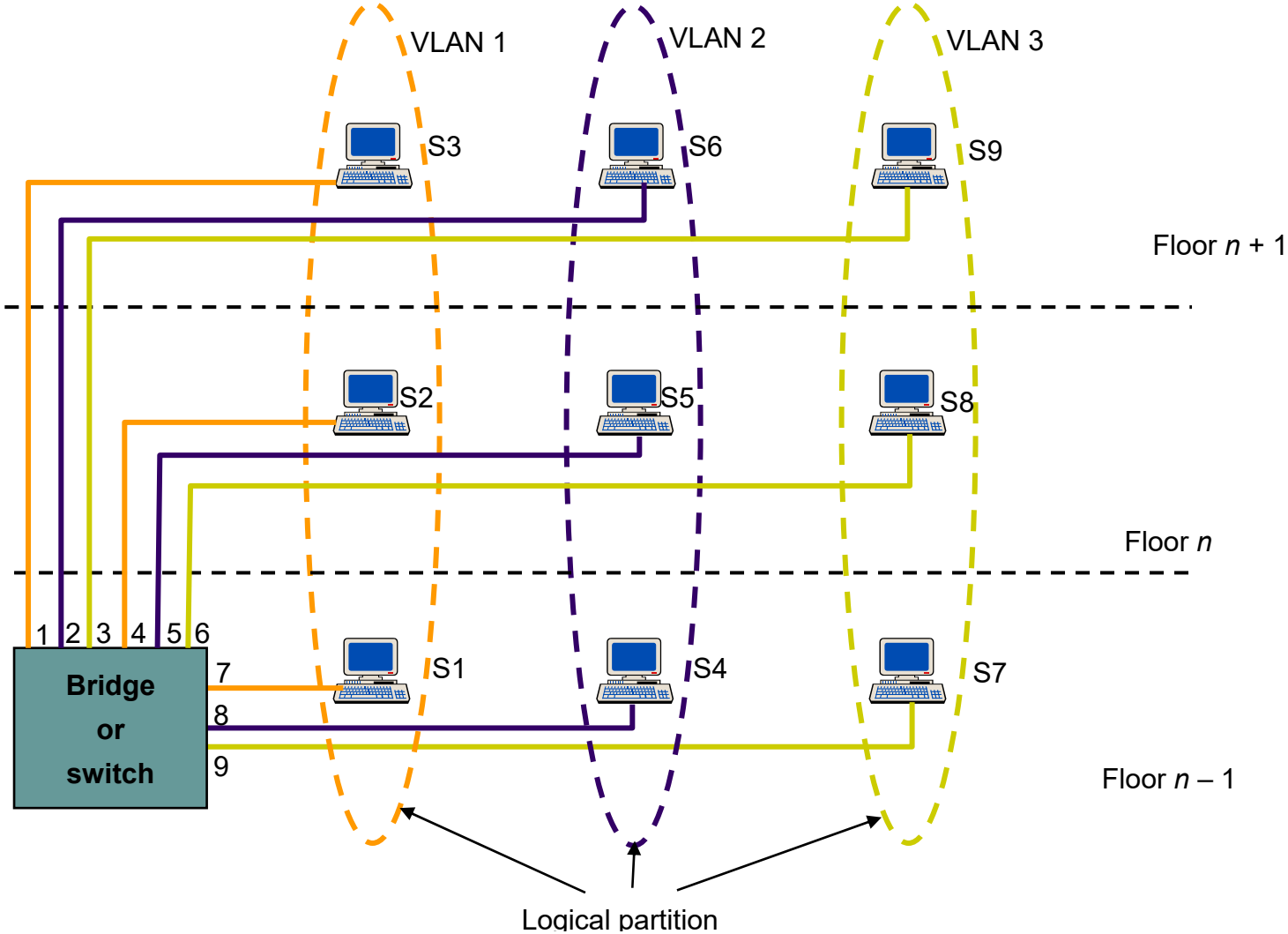

The bridge only forwards frames to outgoing ports associated with the same VLAN of the incoming port.

Tagged VLANs

- More flexible than Port-based VLANs
- Insert VLAN tag after source MAC address in each frame
  - VLAN protocol ID + tag
- VLAN-aware bridge forwards frames to outgoing ports according to VLAN ID
- VLAN ID can be associated with a port statically through configuration or dynamically through bridge learning
- IEEE 802.1q

The IEEE 802.1Q Standard

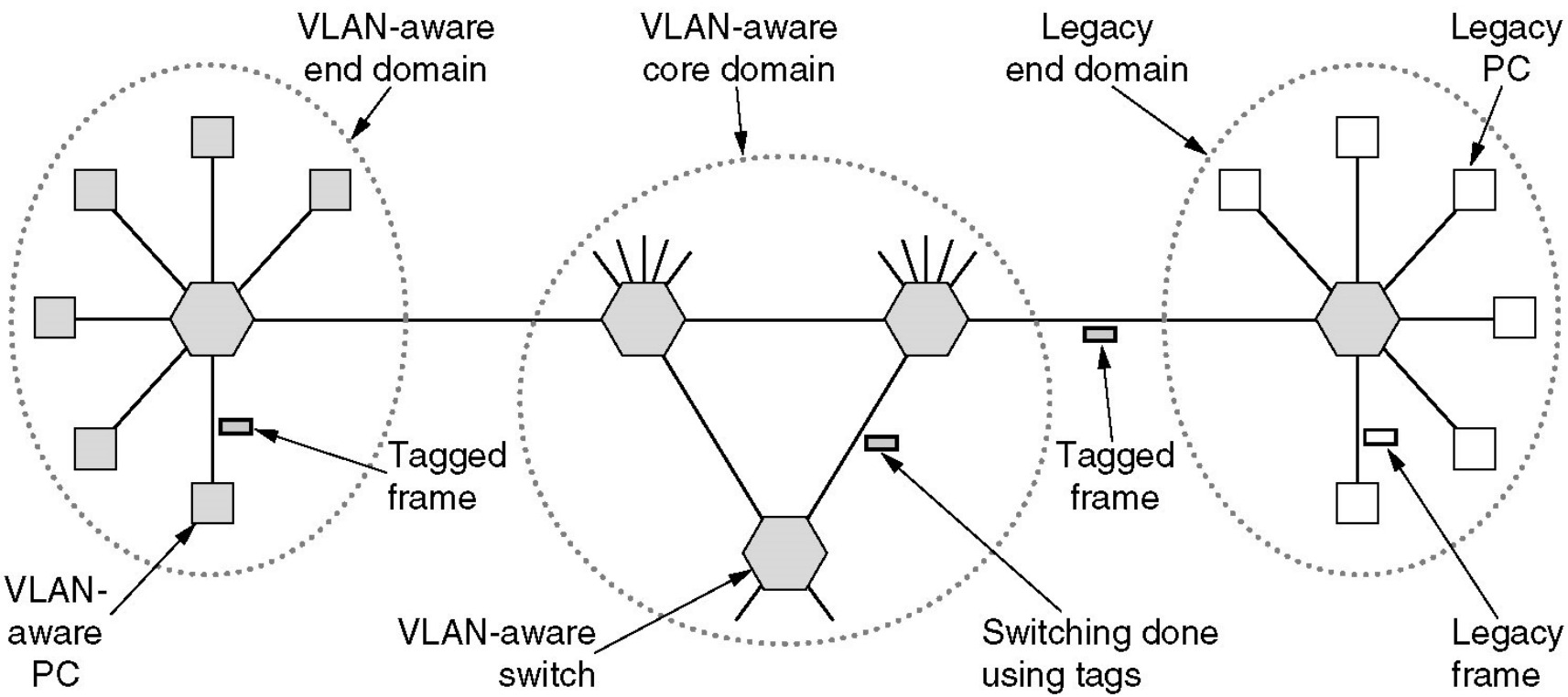

802.1Q frame

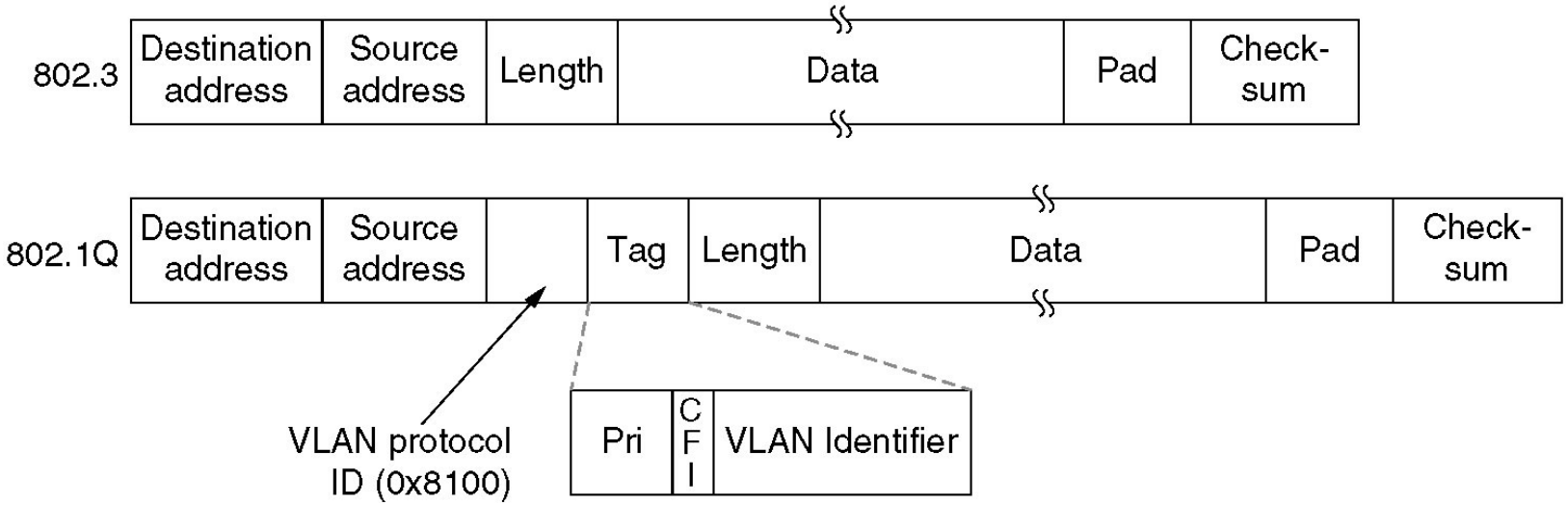
802.3
Destination address
Source address
Length
Data
Pad
Check-sum
802.1Q
Destination address
Source address
Tag
Length
Data
Pad
Check-sum
VLAN protocol ID (0x8100)
Pri
CFI
VLAN Identifier