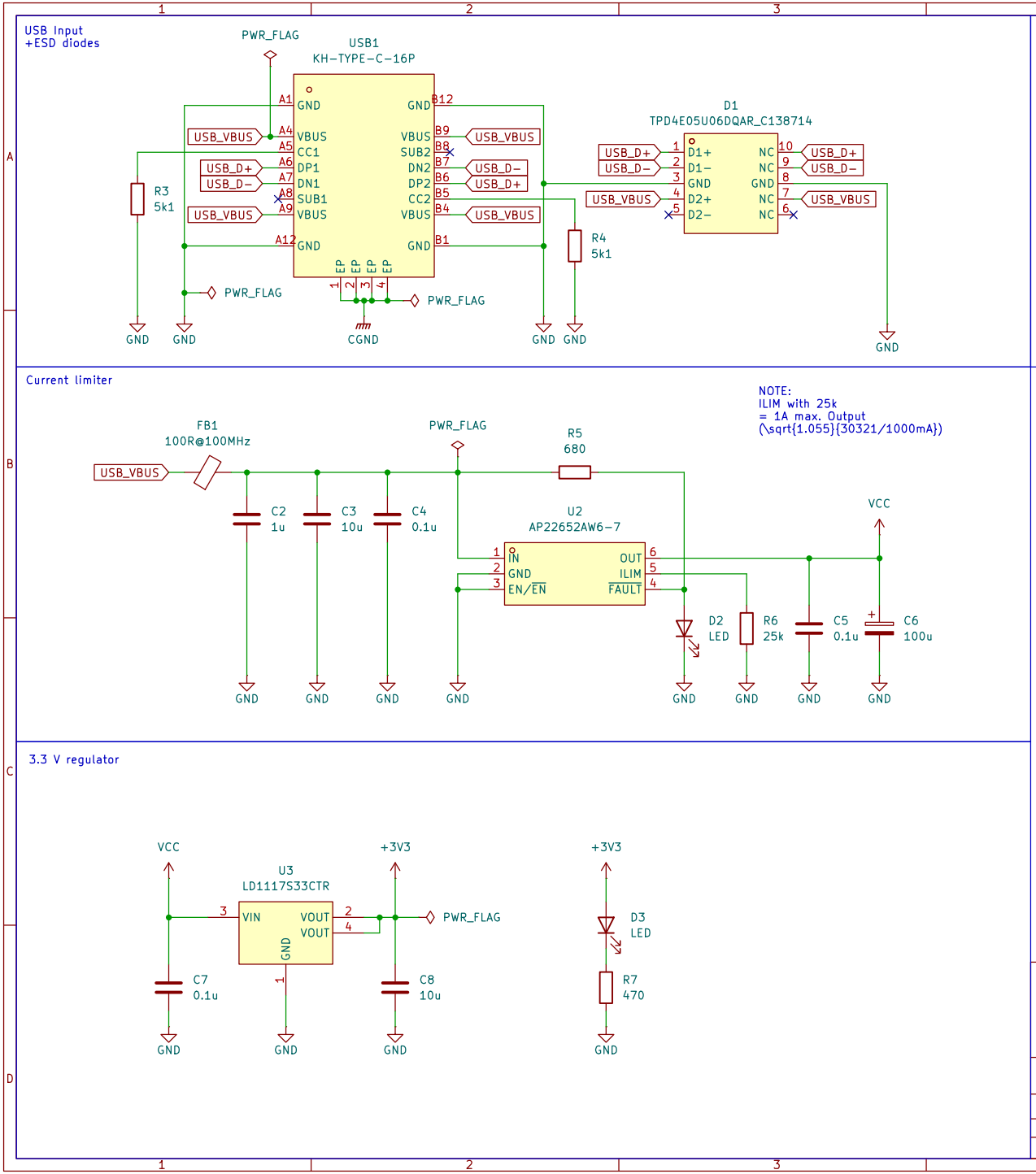

Microcontroller

Headers

File: Headers.kicad_sch

Microcontroller

File: microcontroller.kicad_sch

general ESD

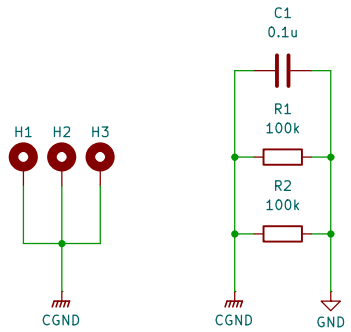

Sheet: /
File: Siemens-Sinumerik840C-Maschinensteuertafel-Adaptor.kicad_sch

Title: Logic, Power & ESD

Size: A4	Date: 2024-10-20	Rev: v0.9.4
KiCad E.D.A. 8.0.5		Id: 1/4

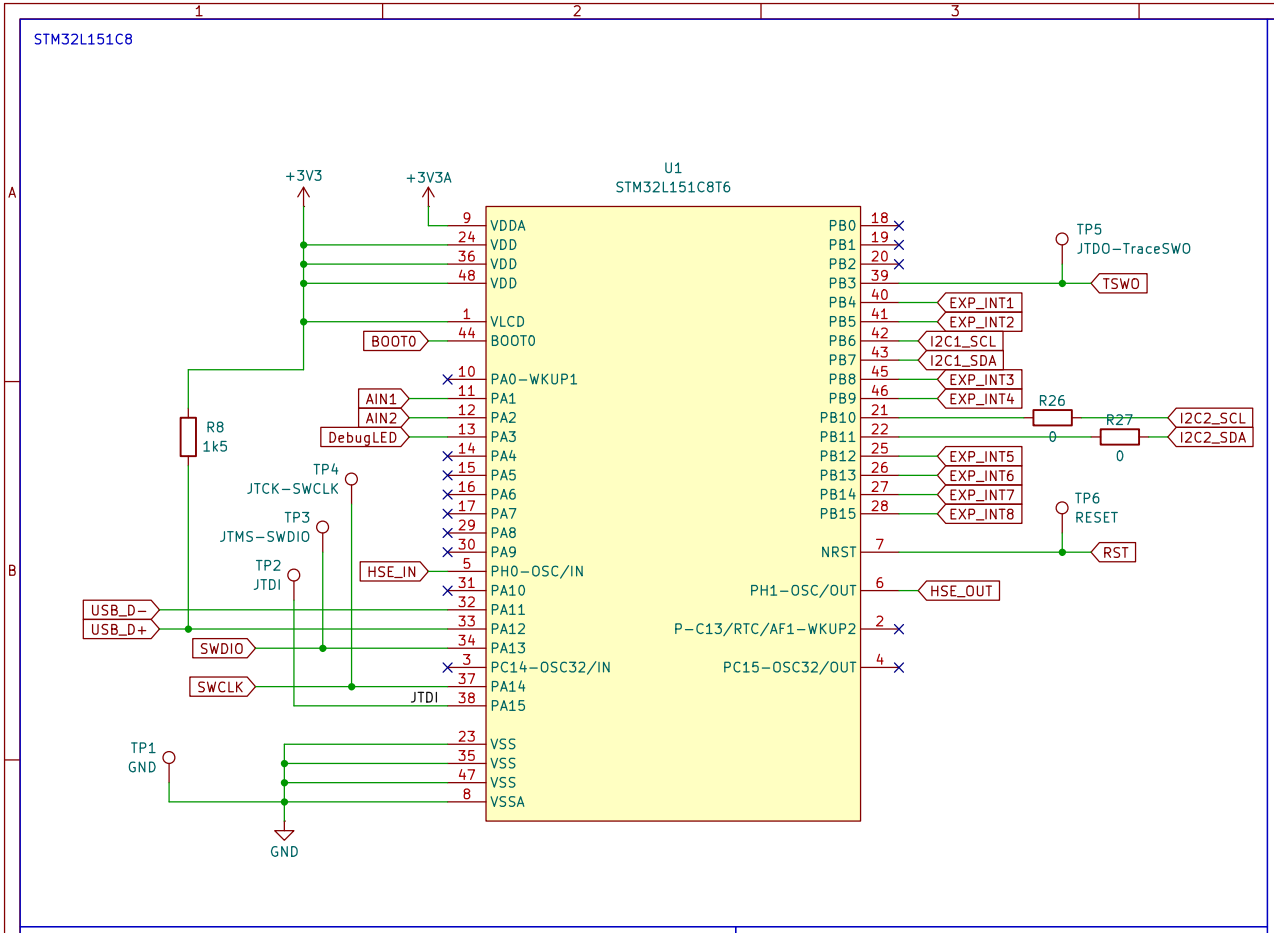

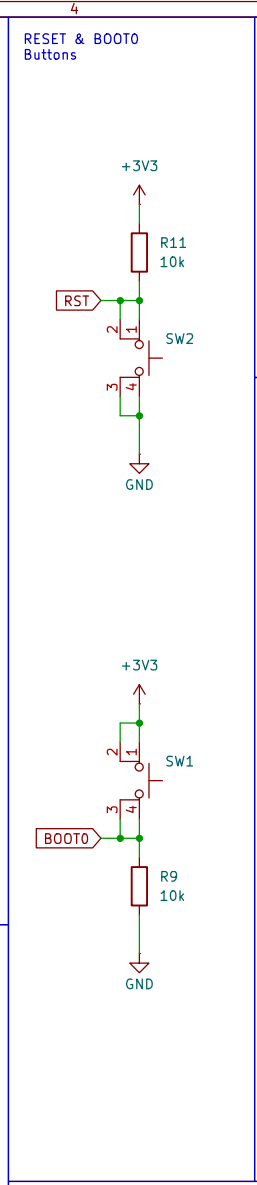

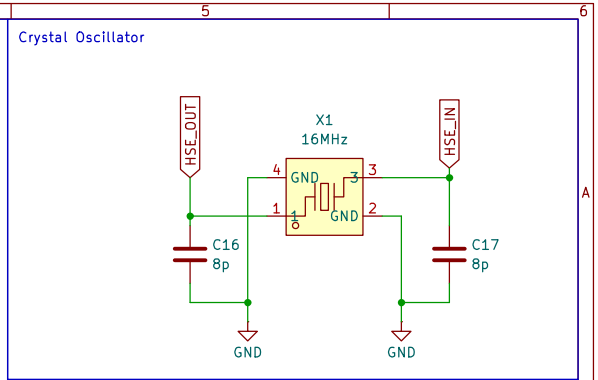

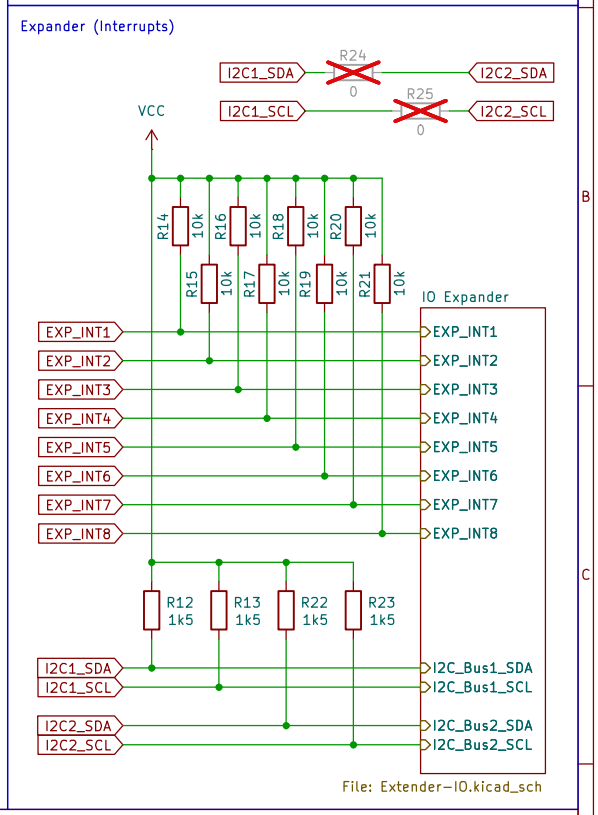

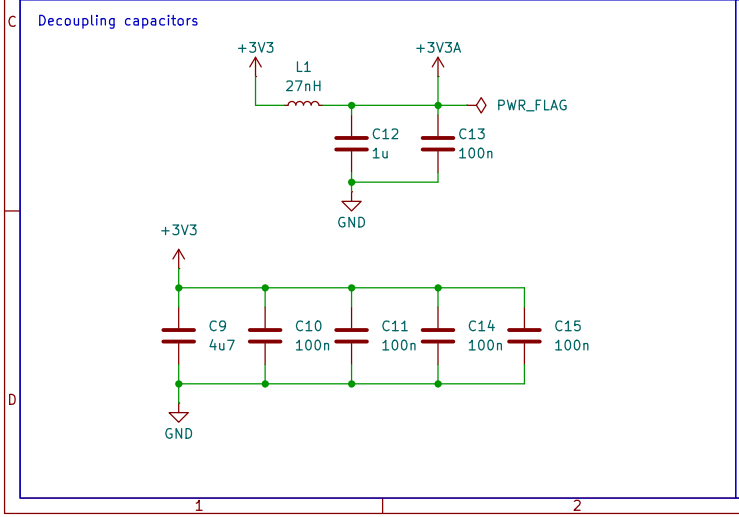

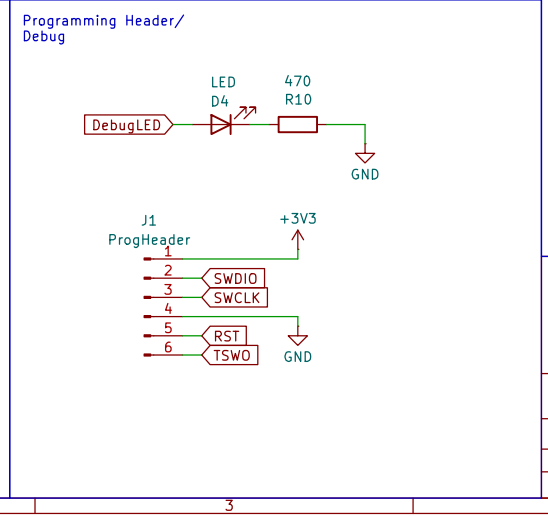

Sheet: /Microcontroller/
File: microcontroller.kicad_sch

Title: Microcontroller logic and I2C busses

Size: A4	Date: 2024-10-20	Rev: v0.9.4
KiCad E.D.A. 8.0.5		Id: 2/4

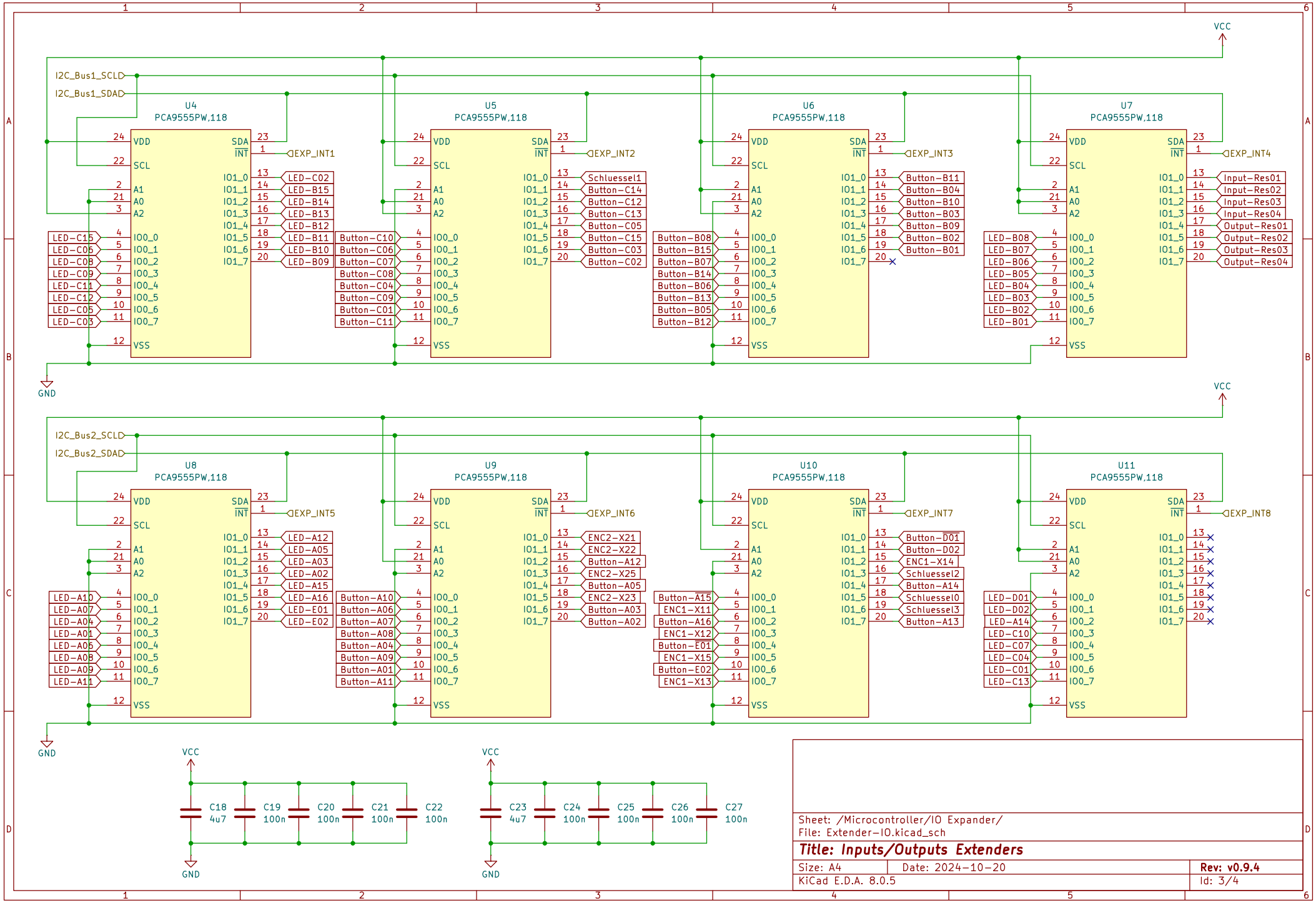

Sheet: /Microcontroller/IO Expander/
File: Extender-IO.kicad_sch

Title: Inputs/Outputs Extenders

Size: A4	Date: 2024-10-20	Rev: v0.9.4
KiCad E.D.A. 8.0.5		Id: 3/4

PinHeader

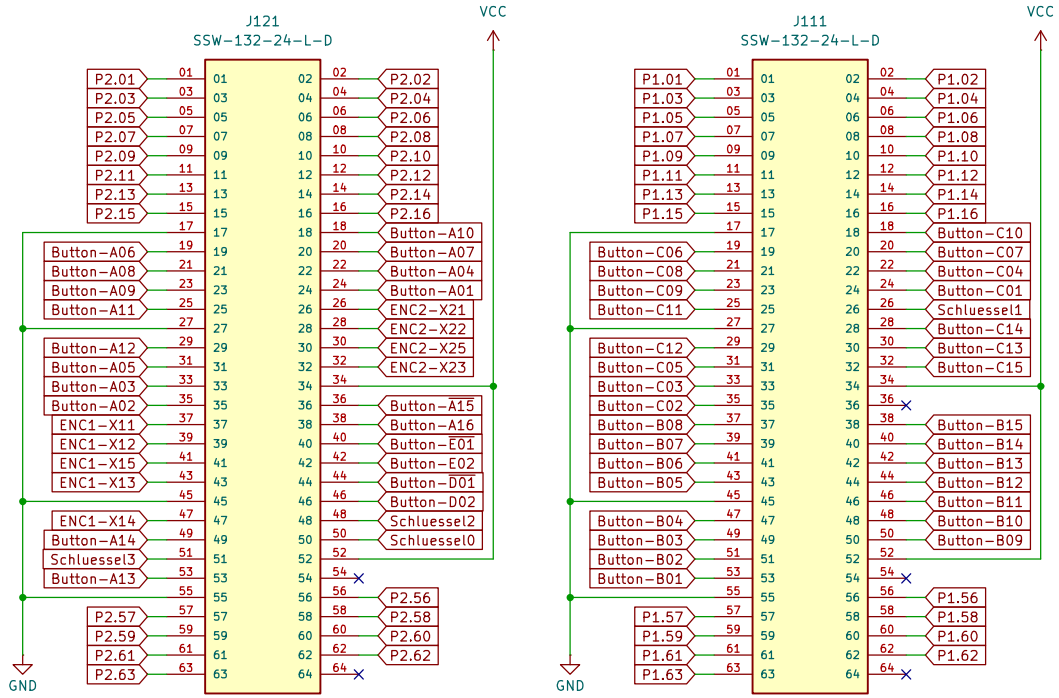

J111 LEDs Resistor-Networks

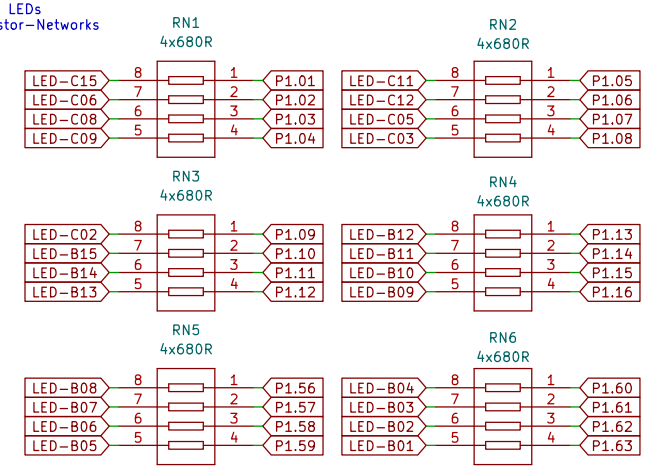

J121 LEDs Resistor-Networks

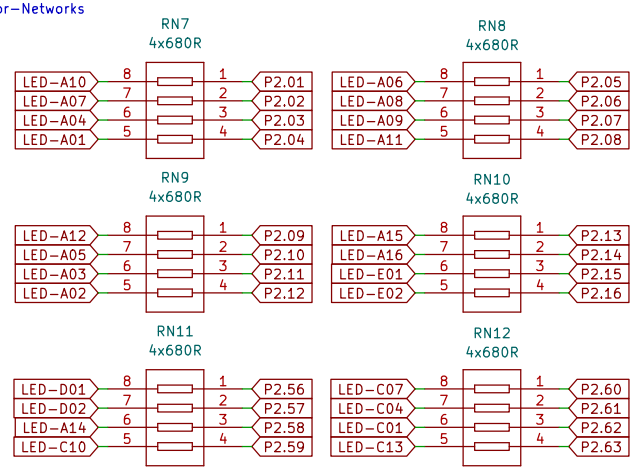

Terminal blocks

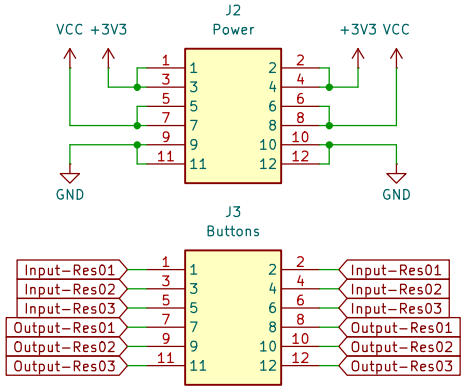

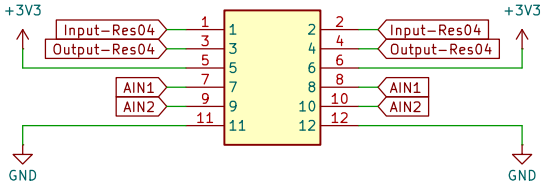

Sheet: /Headers/
File: Headers.kicad_sch

Title: Headers 64Pin Siemens Module

Size: A4	Date: 2024-10-20	Rev: v0.9.4
KiCad E.D.A. 8.0.5		Id: 4/4