Welcome.

Everyone:

- Pull the updates from the course GitHub repo:
  - `cd <46120-PiWE repo>`
  - `git pull origin main`

NB:

- By attending this class, you consent to being recorded. Recording will be shared to this class and possibly other DTU students for training purposes.

46120: Scientific Programming for Wind Energy

Python on Gbar (HPC)

Ju Feng

Agenda for today

- Pull new course material ✔

- Course evaluation
- Introduction on final quiz (Jenni)
- Python on Gbar (HPC)

Course evaluation

- The course evaluation is OPEN. Please, take 10 minutes to fill it out: https://evaluering.dtu.dk/
- We use your feedback to make the course better, so please tell us what you think. We're hoping to get at least 60% of the class to respond, but we're only at 16% right now. 💔

Final quiz intro

Jenni

A suggested development path

We have a tight schedule, think about your group's development plan. Below is a suggestion to consider:

- **Week 8 and 9**: Understand the project (background, requirements and necessary steps/models/equations), explore the provided data (load, parse, visualize), and consider the preliminary design of the architecture of your package.
- **Week 10**: Implement and refine different parts of the package (including tests).
- **Week 11**: Present your architecture and preliminary results in class, finalize the architecture and polish the code (including tests).
- **Week 12**: Refine the documentation, experiment on different computers (install the package, run the main script, check the test coverage, pylint score), fix all potential issues.

Hand in final project: by Monday, May 4th, at 23:59

New note on file paths

← Files main

46120-PiWE / notes_and_tips / 6_note_on_file_paths.md

ju-feng-dk Add a note on working with file paths. 3dfc74e · yesterday

130 lines (97 loc) · 3.82 KB

Preview Code Blame Raw

Working with File Paths in Python

Context: Script `examples/main.py` needs to load `inputs/sample_time_series.csv`, in the repo here: https://github.com/ju-feng-dk/FinalProjectExample

https://github.com/DTUWind-46120-2026/46120-PiWE/blob/main/notes_and_tips/6_note_on_file_paths.md

Final project example

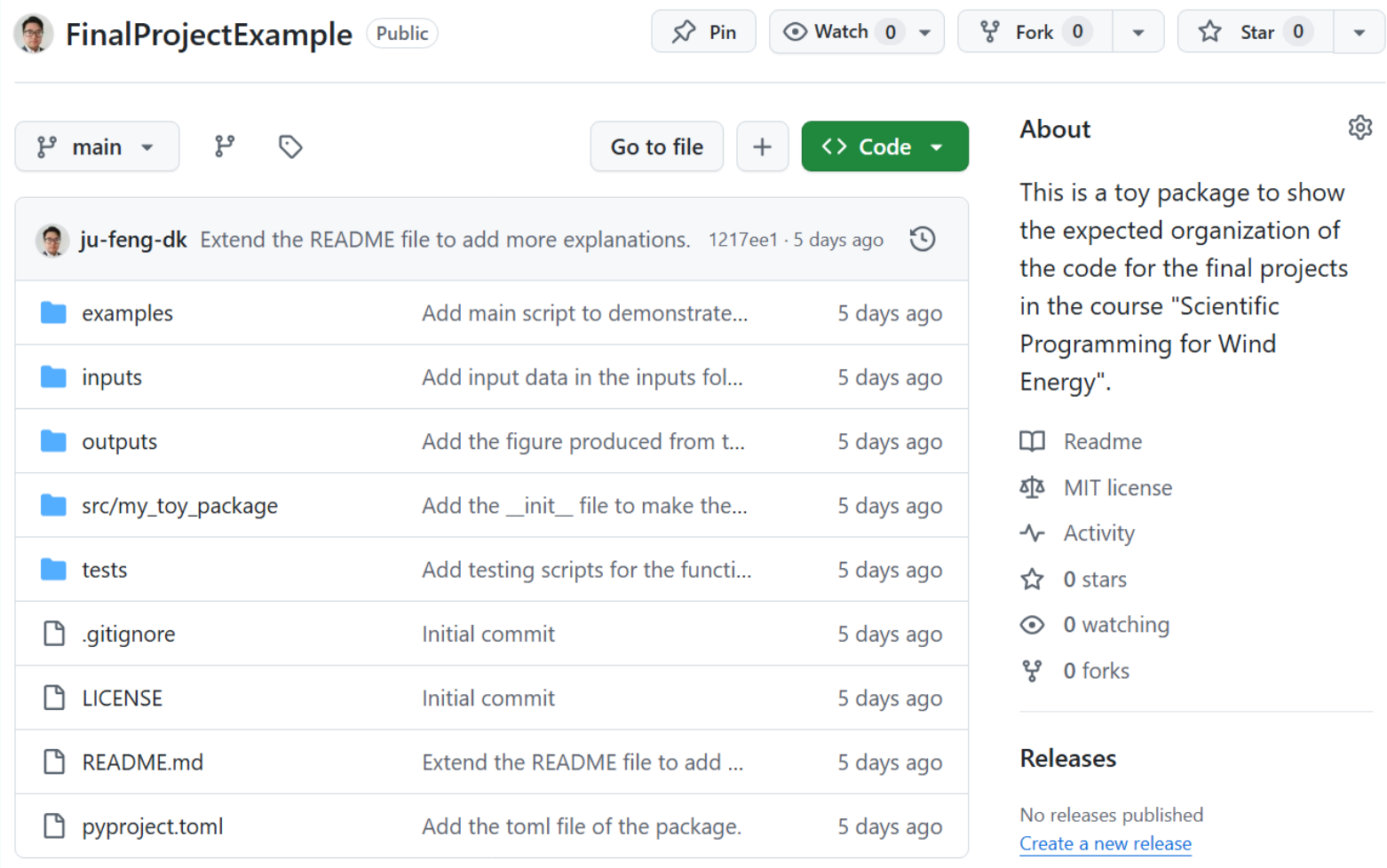

https://github.com/ju-feng-dk/FinalProjectExample

Folder names

When you clone the final project template, you may get some folders named differently. **You should change the folder names according to the formal requirements listed in the week 8 README file**, similar to the organization of this example package:

- `inputs` folder: hosts the provided input data, that are needed for your selected final project. Data for other projects should be deleted.
- `examples` folder: hosts the `main.py` script.

Note that the core functions/classes of your package should be defined in the `src/[your_package_name]` folder, and imported in the main script to be used.

Python on Gbar (HPC)

What is a HPC system?

- High Performance Computing
- The main goal is to run code in parallel for different purposes: Numerical Weather Prediction models, trainning ML algorithms, etc
- They need a ver controlled environment of humidity and temperature and have huge and efficient cooling systems
- New prototypes are tested under special liquids for improving cooling

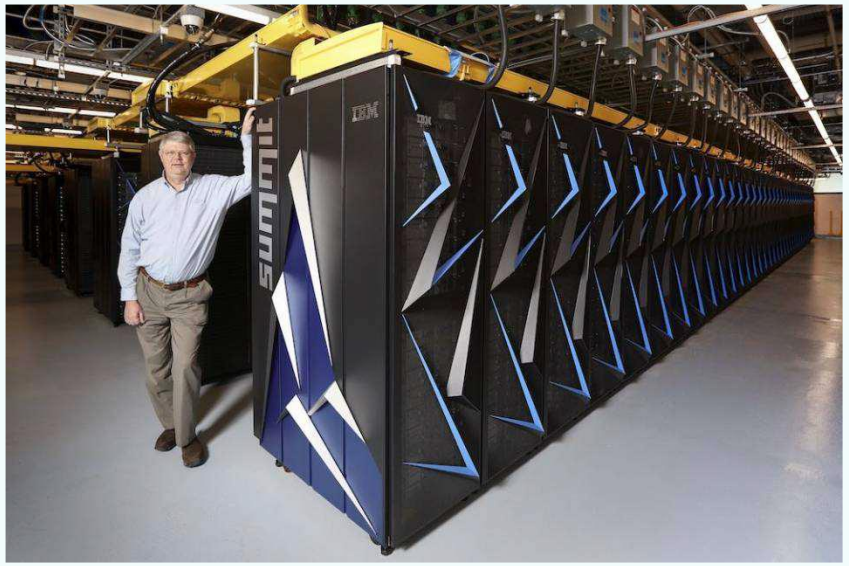

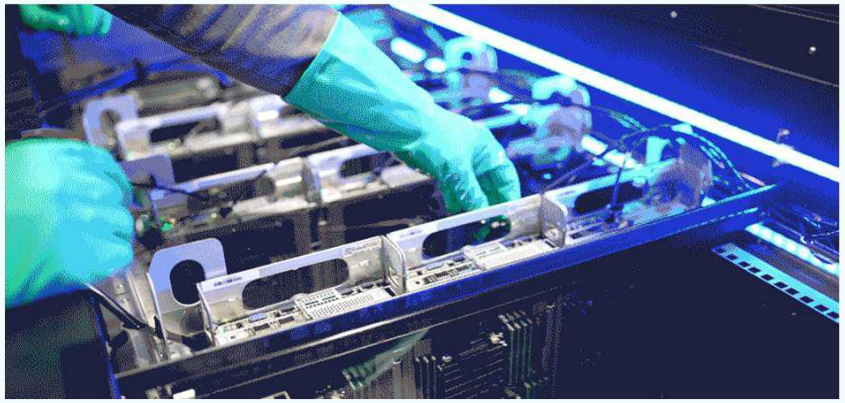

The HPC system

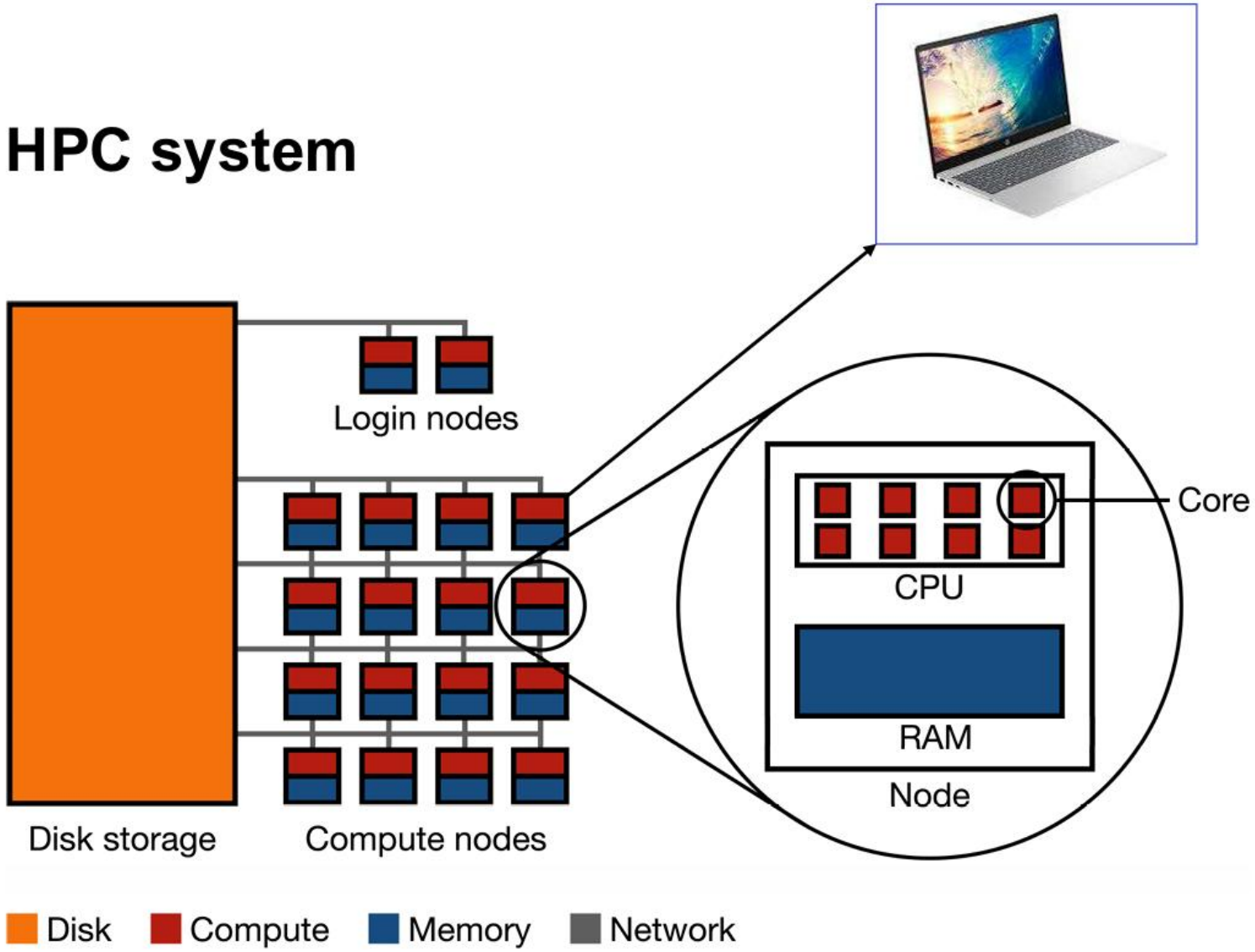

A single HPC node vs my laptop

	CPUs	RAM
My laptop	4	16 GB
HPC Gbar	20	250 GB
HPC Sophia	32	125-250 GB

	Total CPUs	Total RAM	Total disk
HPC Gbar	~7,840	~2.8 TB	2.02 PB
HPC Sophia	16,512	69 TB	6.15 PB

What’s the advantage of a HPC system?

- Is a HPC system always faster than our laptop?: **No**
- **Parallel programming is the key**
- HPC4Wind course in the fall.

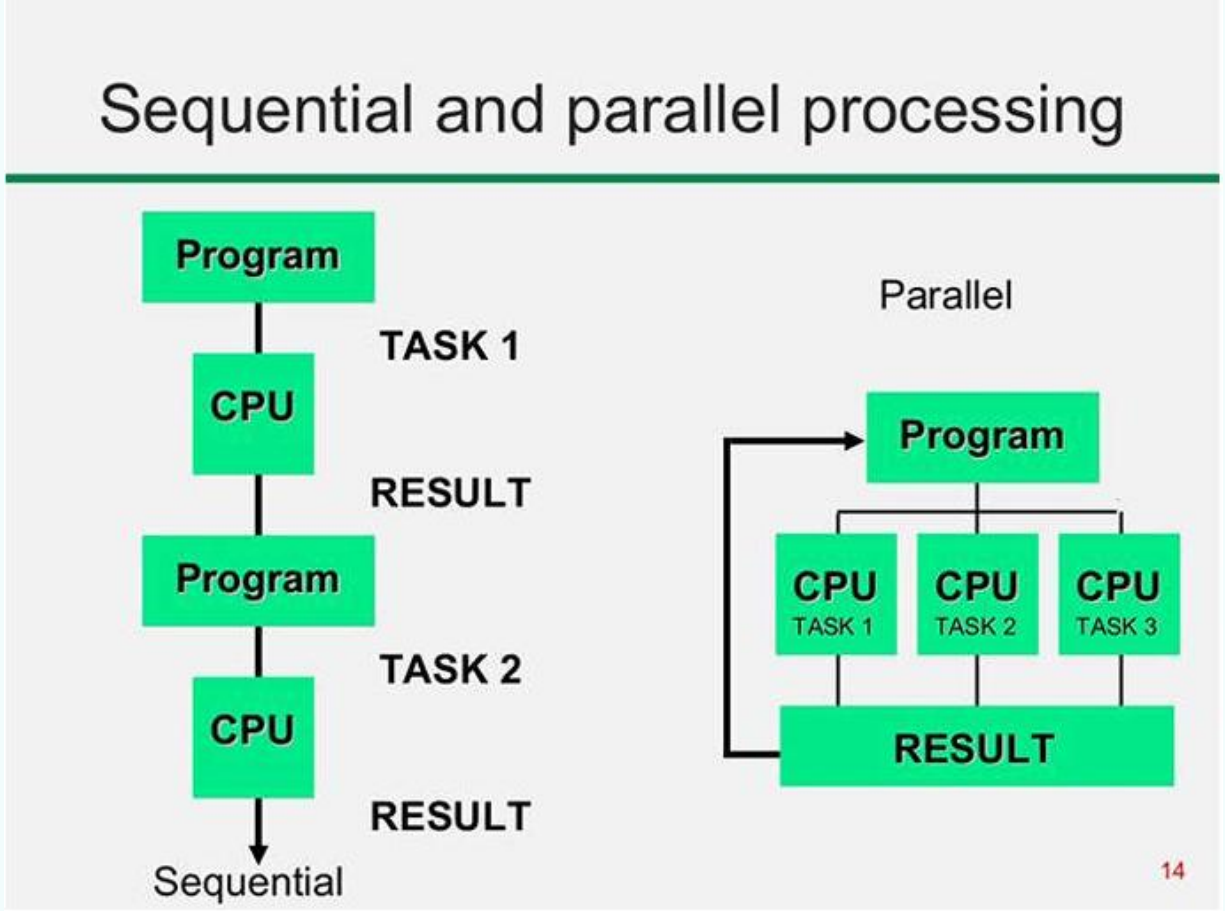

Let’s try it

- Following the README of week12
- Do it with me

Homework for this week.

*Remember, you're expected to work **about 6 hours outside of class**. Schedule accordingly.*

Homework.

- **Homework 0**: Keep working on your final projects!
  - Work collaboratively with your group.
  - Remember to use branch and PR.
  - Write meaningful commit messages.
  - Check the notes in the folder `notes_and_tips` for inspirations, if you have some challenges in your final project.
  - Check the example package (https://github.com/ju-feng-dk/FinalProjectExample) for organization of the package.
  - Remember **requirements on test coverage, pylint score and documentation.**

Hand in final project: by Monday, May 4th, at 23:59

Any questions?

https://github.com/ju-feng-dk/FinalProjectExample