2021 International Conference on Advance Computing and Innovative Technologies in Engineering (ICACITE)
Department of Electrical & Electronics Engineering, Galgotias College of Engineering and Technology, Gr. Noida, India

2021 International Conference on Advance Computing and Innovative Technologies in Engineering (ICACITE) | 978-1-7281-7741-0/20/$31.00 ©2021 IEEE | DOI: 10.1109/ICACITE51222.2021.9404730

Comparative study for Image Forgery Analysis between JPEG and Double JPEG Compression

Priyanka Gupta
Dept. of Computer Science & Engineering
KIET Group of Institution
Ghaziabad, India
Email: Priyankavg02@gmail.com

Anand Prakash Shukla
Dept. of Computer Science & Engineering
KIET Group of Institution
Ghaziabad, India
Email: ap.shukla@kiet.edu

***Abstract* - Image forgery detection is the process of creating fake images has been extremely simple with the introduction of powerful computer graphics editing softwares such as Adobe photoshop, GIMP and many more, basically it deals with digital images. Data compression functions that encode the pristine image with a few bits in data compression. The main objective is to shorten the image redundancy and to effectively store or send data and reduce the storage capacity of pictures, videos and to improve the efficiency of collection and distribution but fixate on running that without lose efficiency and image data in excess. In this paper, We address two techniques of image compression. The first technique is based entirely on Joint Photographic Experts Group (JPEG) and the second technique is based entirely on Double Joint Photographic Experts Group (DJPEG). The simulation results were included and various grades criteria on various images are linked.**

Key Points: JPEG, DJPEG, Image compression, Image processing, Image forgery Detection

I. Introduction

With the development of computer technology, Falsification of digital images has become relatively easy to carry out. Digital files, however, have a very important digital mode and reliability is becoming major problem in digital images. In many approaches need large numbers of images for solving problems & reduce lots of difficulties like easy to store large size images. The room in which photographs are processed is so important. Since less memory space betokens less time required to complete an image, so. image compression conception comes into the equation. "Image compression means reduced the amount of data required to represent a digital image". Many paths to where the compression is utilized to increment efficiency and performance of an image. Forensic technique with multiple degrees of compression with the duplicate image to classify JPEG dispute, but the degree of pressing varies from region to region. If some form of alteration is accomplished in the JPEG image and it is re-enrolled for recollection, the image undergoes re-compression. The realistic applications are like Criminal investigations, Medical imaging, and many more.

i. Concept of Data compression

This is a type of data processing that appeals to the value of storage abbreviated by digital images. It needs two aspects:

a. Device encoding

b. Device Decoding

The process of image compression is to store an image as compact as possible in the remote stream and to express the decoded image as precisely as possible in the unit [2]. The ultimate purpose of a system is to append the sum of the cache, and the decoded image shown in the computer may be identical to the pristine image, then the file will be converted into a binary data sequence when the encoder receives the actual image file; this is called the bit-stream. The encoded bit-stream is then obtained by the decoder and decoded & invented by the decoded image. If the bit-overall stream's data quantity is less than the actual image's total data quantity, then this is called image compression.

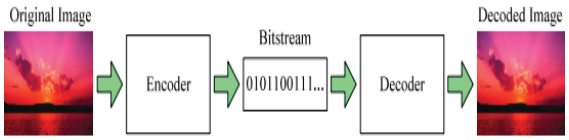

Fig.1: Series of data compression

Both the compression methods work with color and grayscale images and its target to photographic quality images. Types of compression techniques are shown in fig.2,

Authorized licensed use limited to: INSTITUTO FEDERAL DO ESPIRITO SANTO. Downloaded on August 27,2025 at 18:08:47 UTC from IEEE Xplore. Restrictions apply.

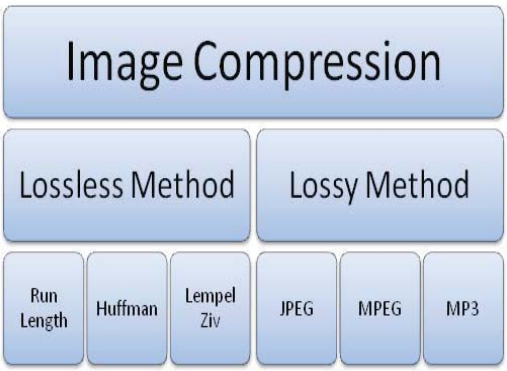

Fig.2. Types of image compression method

A. *Lossless Compression Method:*

a) Actual data, the data afterward compression & decompression are precisely similar.
b) Redundant data is erase in compression & include during decompression.
c) lossless can decrease the amount of data at "low extent".
d) It doesn't decrease the quality of data.
e) Channel holds a tiny size of data.
f) lossless compression retains bitmap values during compression.

B. Lossy Compression Method:

a) It is used for compressing images, video files.

b) In this lossy data is acceptable.

c) This method is cheaper, less time & space.
*Jpeg:- Pictures & Graphics
*Mpeg:-Videos
*Mp3:- Audios

d) It discard the un-useful segments of data i.e. Undetectable.

e) Lossy can reduce the size of file to a "Greater Extent".

The quality of the compressed image depends on the compression ratio [3] between the actual picture and the cover image. The ratio of compression (CR) is stated as, CR= n1/n2 (1)

Thus, n1 and n2 represent the number of units carrying information from the source and compressed images, however. Common loss of data, the RD of the actual picture, includes 3 pixel redundancy situations. Compression ratio is defined as the interaction with, RD=1-1/CR (2)

The possibilities below will express both relative data redundancy and compression ratio,

1) If n1 = n2, then CR = 1 and, thus, RD = 0. Therefore, no variation in the initial an image.

2) if n1 n2 ,then CR → ∞ and therefore RD > 1. Therefore, ample redundancy exists in about the original picture.

3) if n1 n2 ,then CR > 0 and therefore RD→∞. The compressed image, therefore, contains more detail than the initial picture.

II. Related work

Jerome et al. [4] Launches a modern solution to the lossy encoding of video animation. Move-To-Front Transform with the Burrows-Wheeler Transform and compact with Run-Length Encode, sequence of the chain code symbols is changed. Finally, In addition, an arithmetic encoder works to compress the obtained binary stream, then the method mentioned produces significantly better compression ratios than JPEG, JPEG2000, Web P, SPIHT, PNG. Johnston et al. [5] propose a system based on repetitive, fully convolutional neural networks for lossy image compression that exceeds BPG (4:2:0), Site P, JPEG2000, and JPEG as calculated by MS-SSIM. The first big difference for all points on the rate-distortion diagram. Second, our functionally weighted L1 loss function offers a boost across all 3 of its controlled metrics, MS-SSIM, SSIM and PSNRc, while basic optimization for MS-SSIM directly showed that it can provide a significant boost in SSIM-based criteria with a significant decreases. Starosolsk et al. [6] In 2019 In the case of RDLS-modified color space transformations, research into the application of RDLS-SS-DWT+Pred to the 3-dimensional DWT used by JP3D in the lossless compression of volumetric medical images as well as the selection of RDLS filters using the DPC model. Starsolsk et al.[16] in case of RDLS, including step skipping, enables DWT to be efficiently coupled with prediction, This helps in drastic improvements in the lossless compression ratios of JPEG 2000. For Photography, both Because of RDLS-SS-DWT+Pred and No-Photo images, the average shift was nearly twice as much as wide as that generated by using RDLS-SS-DWT without prediction.

Table 1: comparisons using JPEG in various model

Authorized licensed use limited to: INSTITUTO FEDERAL DO ESPIRITO SANTO. Downloaded on August 27,2025 at 18:08:47 UTC from IEEE Xplore. Restrictions apply.

Paper	Compression Types	Model	Techniques
Jeromel et al.[4]	Lossy	4C(Chain Code Cartoon Compression)	JPEG, JPEG-2000 & Algorithms Webp & SPIHT
Johnston et al. [5]	Lossy	Deep Neural Network	Webp, JPEG-2000 as measured SSIM
Starosolsk et al. [6]	Lossless	RDLS(Reversible Denoising & lifting steps)	JPEG-XR, LS, 2000
Starosolsk et al. [16]	Lossless	DWT (Discrete Wavelet Transform)	unmodified JPEG 2000

III. Overview of JPEG Standard

JPEG refers for Joint Photographic Experts Group. Lossy image compression solutions provide a very low file sizes with a minor loss of picture quality due to compression compression algorithms[7]. CCITT and ISO were involved in the two standardization parties, working quickly to implement centralization with the new system. The JPEG standard has been developed over a long period and is now becoming the leading format for compression of lossy graphics. [8]. The JPEG lossy compression method offers superior compression algorithms with acceptable efficiency. [8,9]. The three key steps shown in the JPEG algorithm for lossy compression in fig.3.

Fig.3. JPEG Core Steps

JPEG refers to the fact that at high frequencies, humans can't see colors. The data points in the picture that are eliminated during the compression are these high frequencies. JPEG compression also performs effectively on smooth color transition images. Effective JPEG compression in these three steps reduces the file size with minimal image degradation by extracting the least detail. JPEG output is a lossy compression of the image where, in addition to some information, the final image and the input image are not completely similar.

- JPEG can be used to store and analyze full-color images with realistic elements and brightness and color transitions.
- JPEG is suitable for home photo storage, internet photo transmission or web uploading.
- Its high degree of compression becomes controlled.

i. Basic JPEG Compression Pipeline

In fig 4 JPEG Encoding, the Main Steps include:

- DCT (Discrete Cosine Transformation)
- Quantization
- Zigzag Scan
- DPCM on DC component
- RLE on AC Components
- Entropy Coding

Authorized licensed use limited to: INSTITUTO FEDERAL DO ESPIRITO SANTO. Downloaded on August 27,2025 at 18:08:47 UTC from IEEE Xplore. Restrictions apply.

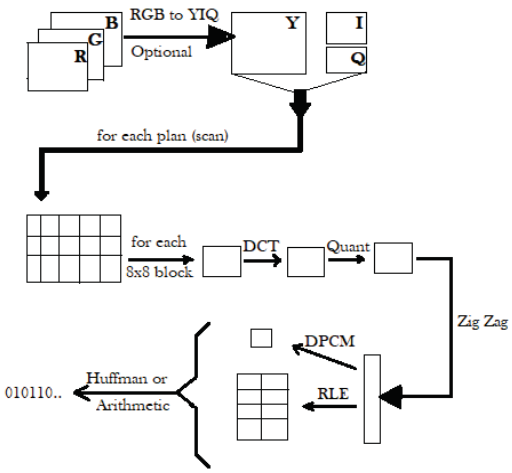

Fig 4 Steps for JPEG Encoding

- Decoding - Reverse the order for Encoding.

ii. *JPEG Process Steps*

In this term presents jpeg compression steps –

- An RGB to YCbCr conversion of color space (color specification)
- • The main image is broken into 8 x 8 blocks.
- • In each row, the pixel values range from [-128 to 127], but the black and white picture pixel values range from [0-255], so that each block is moved from [0-255] to[-128 to 127].
- The DCT operates from left to right, so it is added to each frame from start to finish.
- Every frame is compressed by quantizing.
- The quantized matrix is encoded with entropy.
- Compressed images are restored by reverse engineering. The inverse Discrete Cosine Transform is used by this method (IDCT). [11].

iii. *Major Coding Algorithms*

Splitting – We split an image into blocks of 8x8. Then it generates 64 blocks and each block is referred to as a 1 pixel.

Color space transform - First, transform the model of R, G, B TO Y, Cb, Cr, then transform it into chromium colors , benefit of this are less sensitive to human eyes.

Apply Discrete Cosine Transform- In each block be apply DCT , that gives a visual representation of different magnitudes & frequencies as a sum of frequency components.

Quantization- In this process, Quantize data using the quantization table.

Serialization- We execute Zigzag scanning patterns in order to exploit redundant information..

Vectoring- On DC components, DPCM (differential pulse code modeling) is applied to describe the intensity of colors.

Encoding- In this main conclusion, Propose to encode in Run-length encoding or Huffman encoding, the key purpose is to turn the image to textual form and use encoding that we translate to binary form (0,1) to compress the information.

IV. Double JPEG Compression

Compression detection of JPEG and compression of DJPEG .Detection is one of two common methods of image verification. The most challenging area for showing the unity of the JPEG image in image forensics is double JPEG compression detection. Many other methods for distinguishing against a double JPEG image have been proposed. The method of twice recompressing the JPEG image with the same or discrete quality. Double compression for Jpeg format happens whenever a JPEG image is decompressed and then saved with a different (secondary) quantization matrix to the spatial domain. When the JPEG compression was applied twice, each time with a different quantization matrix with the same alignment with the 8x8 grid, the JPEG image was double-compressed.

V. Related Work

A.M.Raid et al. [9] In this established the concept behind digital image manipulation and various methodologies for image compression, including DCT, quantization, entropy encoding, and the jpeg process steps. A Shawahna et al. [3] Propose the formulation and construction of JPEG compression using VHDL (VHSIC Hardware Definition Language) and the inverse order in VHDL to get the original image back then using optimized matrix multiplication and quantization for DCT to achieve better performance. Qiu H. et al [12] improved JPEG compression process, to accurate DC recovery method and a deep residual learning model and then removed the block artifacts, more different JPEG image datasets with an average PSNR of more than 30 dB. IoT scenarios with DCT-based multimedia big data transmission as it reduces 40 % to still be transmitted with little additional IoT device computing tasks. YOONSIK KIM et al. [13] It suggested a new network for the removal of adaptively gated compression artefacts that would work well for a wide range of available factors. In different, the predicted (3D) Gate-ResBlock, which encloses the network map and acts as a quality factor, pixel-wise adapts the redesign network. Supports a wide variety of compression rates as well as for recompressed/transcoded images with discrete features.

Authorized licensed use limited to: INSTITUTO FEDERAL DO ESPIRITO SANTO. Downloaded on August 27,2025 at 18:08:47 UTC from IEEE Xplore. Restrictions apply.

Table 2: Comparative analysis using JPEG & Double JPEG compression detection for various methods and purpose.

SNo.	Paper	Method	Purpose
1.	**Kim** et al.[17]	CNN based Anti-Forensic	• To boost Anti-Forensics efficiency. • Better Picture quality.
2.	**Kwon** et al.[18]	CNN use RGB & DCT domain	• For localizing spliced regions in JPEG & Non-JPEG image. • To learn forensic capabilities for graphical & compression.
3.	**Wang** et al. [15]	SVM, QDCT	• SVM used for detect NA-DJPEG. • Refine Markov in QDCT Domain.
4.	**Taimori** et al.[14]	Quantized AC modes	• Consistency level of compression. • Detect features of block, picture, structure.
5.	**Kim.Y** et al.[13]	DCT, CNN	• To capture all spatial & frequency Picture relations. • Broad continuum of consistency.
6.	**Qiu.H** et al.[12]	DCT, IoT	• Increase DCT based visual huge data connectivity in IoT system**.**
7.	**Vema.V** et al.[11]	DCT, Deep learning	• To contradict quantized DCT coefficient histogram with Q-factor. • Use DenseNet to remove unique object.
8.	**Niu** et al.[10]	Welch PSD	• Double resized compression JPEG image with bicubic set interpolation.

Authorized licensed use limited to: INSTITUTO FEDERAL DO ESPIRITO SANTO. Downloaded on August 27,2025 at 18:08:47 UTC from IEEE Xplore. Restrictions apply.

9.	**A.M. Raid** et al.[9]	JPEG, DCT	• Based on fast and effective lossy coding strategies.
10.	**Jinseok** et al.[8]	CNN	• ·Deals with mixed content JPEGs aspects, suitable in real world instances.
11.	**A.Shawahna** et al.[3]	VHDL (VHSIC Hardware Description Language), DCT	• To move the pictures & reduced size without losing much of the actual detail. • Optimized use to achieve better differentiation and quantization of matrixes for DCT Performances.
12.	**Sengupta** et al.[1]	JPEG Compression	• It works in medical images & to protect against risks i.e, cloning, torjan.

Conclusion & Future scope

In this article, we discuss image compression in order to minimize the longevity of the image and to retain or transmit information in an efficient manner. In addition, various models are used to define the modes of compression and to analyze different techniques, as the class of data encoding techniques that use unreliable approximations and partial discarding of data to describe the contents is lossy compression. Then we discuss the JPEG and Double-JPEG compression techniques and compare them with the different approaches to be used and what the real world is trying to use. Looking forward to boosting the form of anti-forensics to help with medical imaging.

References

[1] A. Sengupta and M. Rathor, "Structural Obfuscation and Crypto-Steganography-Based Secured JPEG Compression Hardware for Medical Imaging Systems," in IEEE Access, 2020, vol. 8, pp. 6543-6565.

[2] Wei-Yi Wei," An Introduction to Image Compression", Graduate Institute of Communication Engineering National Taiwan University, Taipei, Taiwan, ROC.

[3] A. Shawahna, Md. E. Haque, and A. Amin," JPEG Image Compression using the Discrete Cosine Transform: An Overview, Applications, and Hardware Implementation," King Fahd University of Petroleum and Minerals, Dhahran-31261, KSA, Nov. 2019.

[4] A. Jeromel, & B. Žalik," An efficient lossy cartoon image compression method", Multi.Tools and App., Jan. 2020, pp. 433-451.

[5] N. Johnston, D. Vincent, D. Minnen, M. Covell, S. Singh, T. Chinen, G. Toderici ,"Improved Lossy Image Compression with Priming and Spatially Adaptive Bit Rates for Recurrent Networks", in IEEE/CVF Conference on Computer Vision and Pattern Recognition, Salt Lake City, UT, 2018, pp. 4385-4393.

[6] R. Starosolski, "Reversible denoising and lifting based color component transformation for lossless image compression", Multimed Tools Appl.79, May 2020, pp. 11269–11294.

[7] M. Abuzaher, J. Al-Azzeh ,"JPEG Based Compression Algorithm", in International Journal of Engineering and App. Science (IJEAS), vol-4, April 2017, pp. 2394-3661.

[8] J. Park, D. Cho, W. Ahn, H.k. Lee," Double JPEG Detection in Mixed JPEG Quality Factors using Deep Convolutional Neural Network", Proceedings of the European Conference on Computer Vision (ECCV), 2018, pp. 636-652.

[9] A.M. Raid, W.M. Khedr, M. A. El-dosuky and W. Ahmed, "Jpeg Image Compression Using Discrete Cosine Transform - A Survey", International Journal of Computer Science & Engineering Survey, vol-5(2), April 2014, pp. 39–47..

[10] Y. Niu, X. Li, Y. Zhao and R. Ni, "Primary Quality Factor Estimation Of Resized Double Compressed JPEG Images," IEEE International Conference on Image Processing (ICIP), Abu Dhabi, United Arab Emirates, 2020, pp. 583-587..

[11] V. Verma , D. Singh, and N. Khanna, " Block-level Double JPEG Compression Detection for Image Forgery Localization",March-2020.

[12] H. Qiu, Q. Zheng, G. Memmi, J. Lu, M. Qiu and B. Thuraisingham, "Deep Residual Learning-Based Enhanced JPEG Compression in the Internet of Things," in IEEE Transactions on Industrial Informatics, vol. 17, no. 3, Feb. 2021, pp. 2124-2133.

[13] Y. Kim, J. W. Soh, & N. I. Cho," AGARNet: Adaptively Gated JPEG Compression Artifacts Removal Network for a Wide Range Quality Factor", IEEE Access , Jan- 2020, pp. 20160–20170.

[14] A. Taimori, F. Razzazi, A. Behrad, A. Ahmadi, & M. Babaie-Zadeh," Quantization-Unaware Double JPEG Compression Detection",Journal of Mathematical Imaging and Vision, vol- 54(3), pp. 269–286.

[15] J. Wang, W. Huang, X. Luo ," Non-aligned double JPEG compression detection based on refined Markov features in QDCT domain", Journal of Real-Time Image Processing 17, Nov. 2020, pp. 7–16.

[16] R. Starosolski, "Hybrid Adaptive Lossless Image Compression Based on Discrete Wavelet Transform", July 2020,Entropy, vol. 22(7), pp. 751.

Authorized licensed use limited to: INSTITUTO FEDERAL DO ESPIRITO SANTO. Downloaded on August 27,2025 at 18:08:47 UTC from IEEE Xplore. Restrictions apply.

[17] D. Kim, W. Ahn and H. -K. Lee, "End-to-End Anti-Forensics Network of Single and Double JPEG Detection," in IEEE Access, vol. 9, Jan. 2021 pp. 13390-13402

[18] M. Kwon, In-Jae Yu, S. Nam, H. Lee," CAT-Net: Compression Artifact Tracing Network for Detection and Localization of Image Splicing", Proceedings of the IEEE/CVF Winter Conference on Applications of Computer Vision (WACV), 2021, pp. 375-384.

Authorized licensed use limited to: INSTITUTO FEDERAL DO ESPIRITO SANTO. Downloaded on August 27,2025 at 18:08:47 UTC from IEEE Xplore. Restrictions apply.