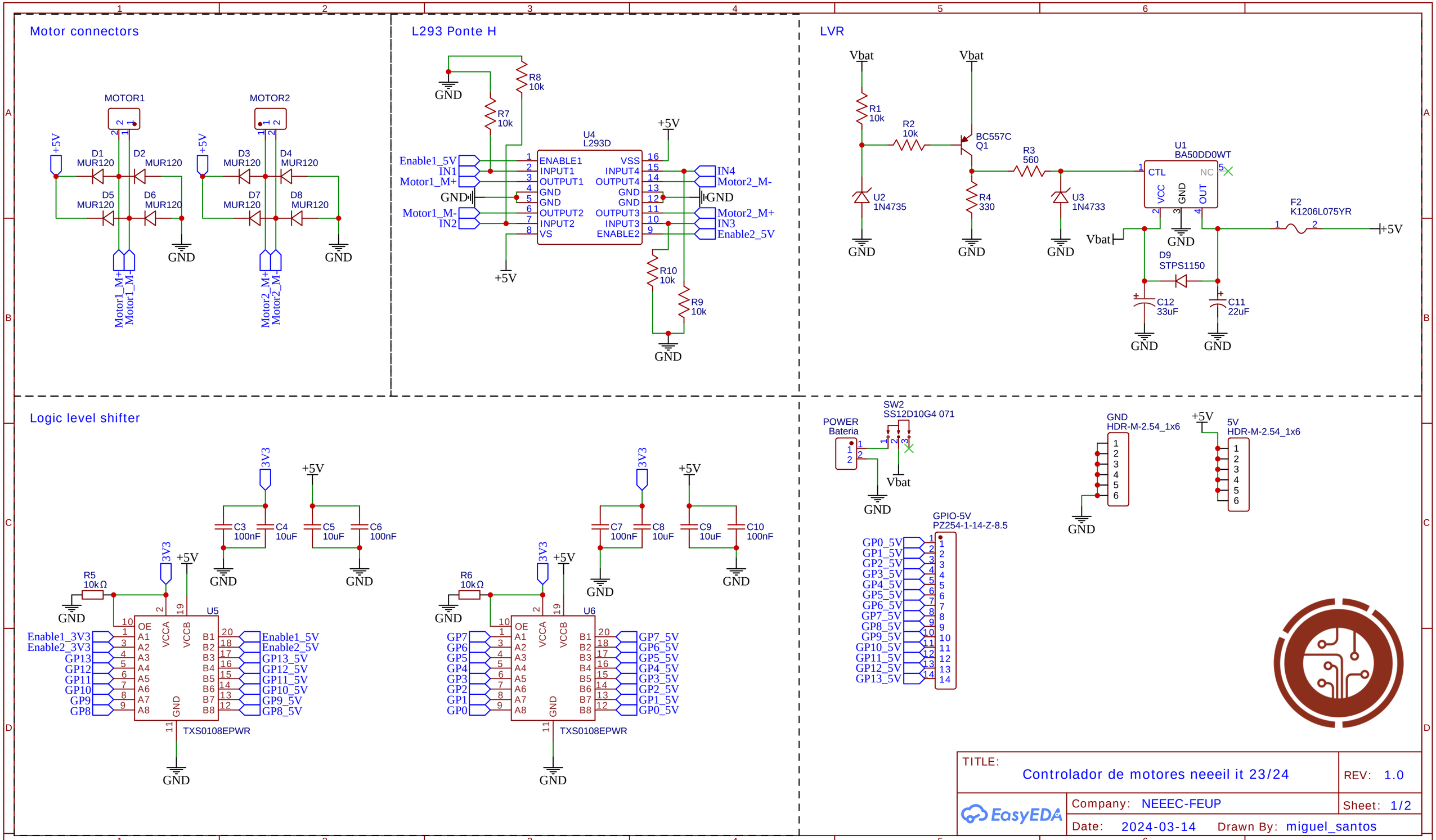
Motor connectors
MOTOR1
MOTOR2
+5V
D1 MUR120
D2 MUR120
D3 MUR120
D4 MUR120
D5 MUR120
D6 MUR120
D7 MUR120
D8 MUR120
GND
Motor1_M+
Motor1_M-
Motor2_M+
Motor2_M-
L293 Ponte H
R8 10k
R7 10k
U4 L293D
Enable1_5V
IN1
Motor1_M+
GND
Motor1_M-
IN2
ENABLE1
INPUT1
OUTPUT1
GND
GND
OUTPUT2
INPUT2
VS
VSS
INPUT4
OUTPUT4
GND
GND
OUTPUT3
INPUT3
ENABLE2
IN4
Motor2_M-
GND
Motor2_M+
IN3
Enable2_5V
R10 10k
R9 10k
LVR
Vbat
R1 10k
R2 10k
BC557C Q1
R3 560
U2 1N4735
R4 330
U3 1N4733
U1 BA50DD0WT
CTL
NC
VCC
GND
OUT
D9 STPS1150
C12 33uF
C11 22uF
F2 K1206L075YR
Logic level shifter
3V3
C3 100nF
C4 10uF
C5 10uF
C6 100nF
R5 10kΩ
U5
OE
VCCA
VCCB
A1
A2
A3
A4
A5
A6
A7
A8
B1
B2
B3
B4
B5
B6
B7
B8
Enable1_3V3
Enable2_3V3
GP13
GP12
GP11
GP10
GP9
GP8
Enable1_5V
Enable2_5V
GP13_5V
GP12_5V
GP11_5V
GP10_5V
GP9_5V
GP8_5V
TXS0108EPWR
C7 100nF
C8 10uF
C9 10uF
C10 100nF
R6 10kΩ
U6
GP7
GP6
GP5
GP4
GP3
GP2
GP1
GP0
GP7_5V
GP6_5V
GP5_5V
GP4_5V
GP3_5V
GP2_5V
GP1_5V
GP0_5V
POWER Bateria
SW2 SS12D10G4 071
GND HDR-M-2.54_1x6
5V HDR-M-2.54_1x6
GPIO-5V PZ254-1-14-Z-8.5
GP0_5V
GP1_5V
GP2_5V
GP3_5V
GP4_5V
GP5_5V
GP6_5V
GP7_5V
GP8_5V
GP9_5V
GP10_5V
GP11_5V
GP12_5V
GP13_5V
TITLE:
Controlador de motores neeeil it 23/24
REV: 1.0
Company: NEEEC-FEUP
Sheet: 1/2
Date: 2024-03-14
Drawn By: miguel_santos
EasyEDA

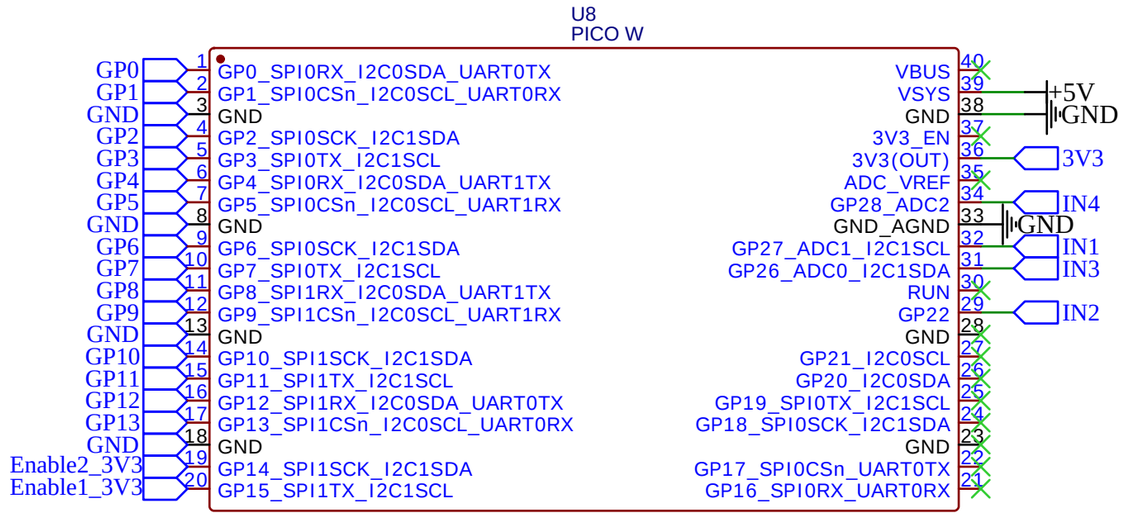

TITLE: Controlador de motores neeeil it 23/24		REV: 1.0
EasyEDA	Company: Your Company	Sheet: 2/2
	Date: 2024-03-25 Drawn By: miguel_santos	

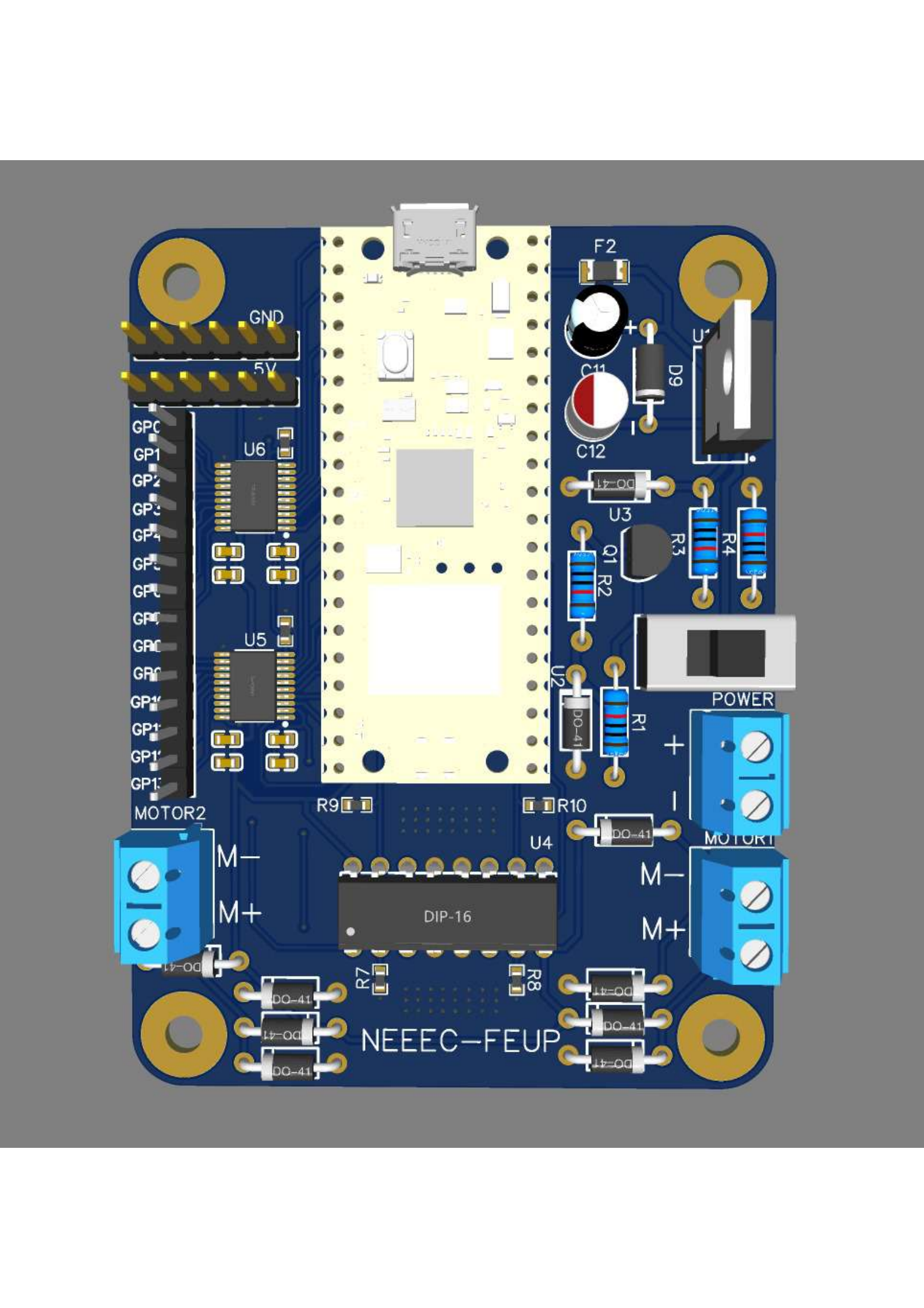
GND
5V
GP0
GP1
GP2
GP3
GP4
GP5
GP6
GP7
GP8
GP9
GP10
GP11
GP12
GP13
U6
U5
MOTOR2
M−
M+
R9
R10
U4
DIP-16
R7
R8
F2
C11
C12
D9
U1
DO-41
U3
Q1
R2
R3
R4
U2
R1
POWER
+
−
MOTOR1
M−
M+
NEEEC−FEUP