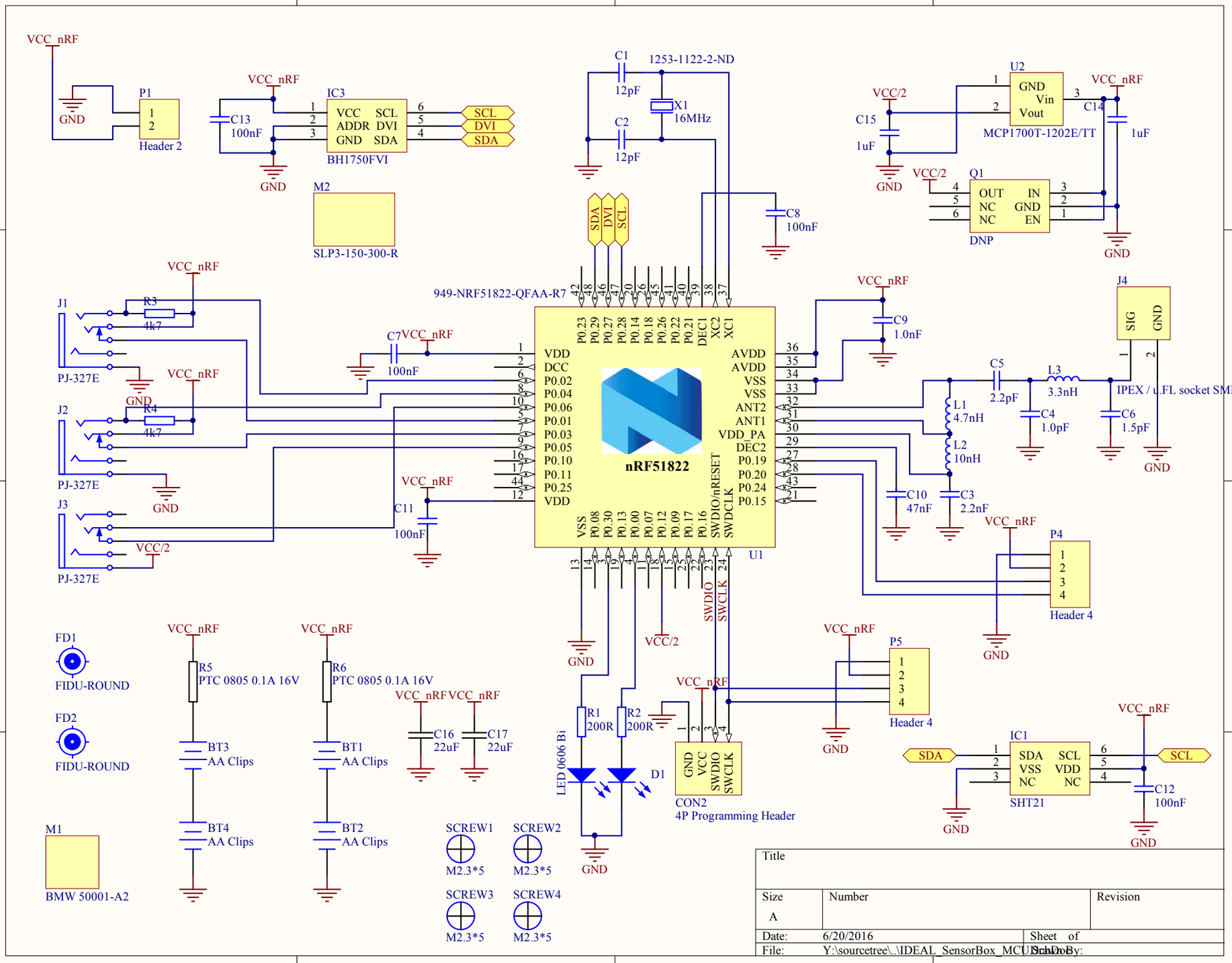
VCC_nRF
GND
P1
Header 2
C13
100nF
IC3
VCC SCL
ADDR DVI
GND SDA
BH1750FVI
SCL
DVI
SDA
M2
SLP3-150-300-R
C1
12pF
1253-1122-2-ND
X1
16MHz
C2
12pF
C8
100nF
U2
GND
Vin
Vout
MCP1700T-1202E/TT
VCC/2
C15
1uF
C14
1uF
Q1
OUT IN
NC GND
NC EN
DNP
949-NRF51822-QFAA-R7
J1
R3
4k7
PJ-327E
J2
R4
4k7
PJ-327E
J3
PJ-327E
C7
100nF
C11
100nF
nRF51822
U1
VDD
DCC
P0.02
P0.04
P0.06
P0.01
P0.03
P0.05
P0.10
P0.11
P0.25
VDD
AVDD
AVDD
VSS
VSS
ANT2
ANT1
VDD_PA
DEC2
P0.19
P0.20
P0.24
P0.15
VSS
P0.08
P0.30
P0.13
P0.00
P0.07
P0.12
P0.09
P0.17
P0.16
SWDIO/nRESET
SWDCLK
C9
1.0nF
C5
2.2pF
L3
3.3nH
J4
SIG
GND
IPEX / u.FL socket SMD
L1
4.7nH
L2
10nH
C4
1.0pF
C6
1.5pF
C10
47nF
C3
2.2nF
P4
Header 4
P5
Header 4
FD1
FIDU-ROUND
FD2
FIDU-ROUND
R5
PTC 0805 0.1A 16V
R6
PTC 0805 0.1A 16V
BT3
AA Clips
BT4
AA Clips
BT1
AA Clips
BT2
AA Clips
C16
22uF
C17
22uF
R1
200R
R2
200R
LED 0606 Bi
D1
GND
VCC
SWDIO
SWCLK
CON2
4P Programming Header
IC1
SDA SCL
VSS VDD
NC NC
SHT21
C12
100nF
M1
BMW 50001-A2
SCREW1
M2.3*5
SCREW2
M2.3*5
SCREW3
M2.3*5
SCREW4
M2.3*5
Title
Size
A
Number
Revision
Date: 6/20/2016
Sheet of
File: Y:\sourcetree\..\IDEAL_SensorBox_MCU.SchDoc
Drawn By: