Model

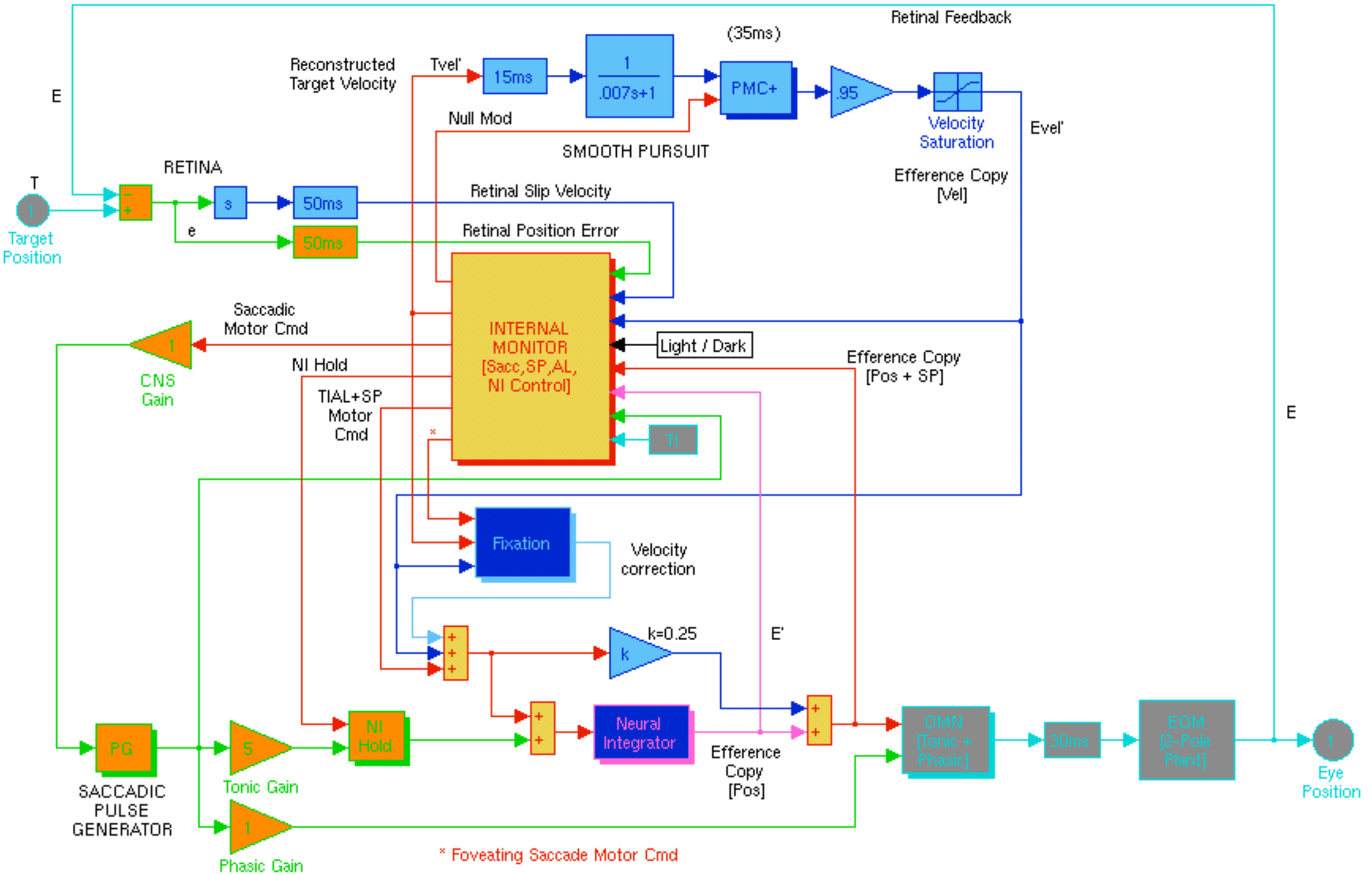
Retinal Feedback
(35ms)
Reconstructed
Target Velocity
Tvel'
15ms
1
.007s+1
PMC+
.95
Velocity
Saturation
Evel'
E
Null Mod
SMOOTH PURSUIT
RETINA
T
Target
Position
s
50ms
Efference Copy
[Vel]
Retinal Slip Velocity
e
50ms
Retinal Position Error
INTERNAL
MONITOR
[Sacc,SP,AL,
NI Control]
Saccadic
Motor Cmd
Light / Dark
CNS
Gain
NI Hold
Efference Copy
[Pos + SP]
TIAL+SP
Motor
Cmd
*
TI
E
Fixation
Velocity
correction
k=0.25
k
E'
NI
Hold
Neural
Integrator
Efference
Copy
[Pos]
OMN
[Tonic +
Phasic]
30ms
EOM
[2-Pole
Plant]
Eye
Position
PG
SACCADIC
PULSE
GENERATOR
5
Tonic Gain
1
Phasic Gain
* Foveating Saccade Motor Cmd