SY8286A

High Efficiency Fast Response
6A, 23V Input Synchronous Step Down Regulator

General Description

The SY8286A develops a high efficiency synchronous step-down DC/DC regulator capable of delivering 6A current. The device integrates main switch and synchronous switch with very low $R_{DS(ON)}$ to minimize the conduction loss.

The SY8286A operates over a wide input voltage range from 4V to 23V. The DC/DC regulator adopts the instant PWM architecture to achieve fast transient responses for high step down applications and high efficiency at light loads. The device provides various protection features for reliable operation. In addition, it operates at pseudo-constant frequency of 600kHz to minimize the size of inductor and capacitor.

Ordering Information

SY8286 □(□□)□

- Temperature Code
- Package Code
- Optional Spec Code

Ordering Number	Package type	Note
SY8286ARAC	QFN3×3-20	--

Features

- Low $R_{DS(ON)}$ for Internal Switches (Top/Bottom): 38/19 mΩ
- Wide Input Voltage Range: 4-23V
- Instant PWM Architecture to Achieve Fast Transient Responses
- Internal 1.3ms Soft-start Limits the Inrush Current
- Pseudo-constant Frequency: 600kHz
- 6A Output Current Capability
- ±1% Internal Reference Voltage
- PFM/PWM Selectable Light Load Operation Mode
- Optional Bypass Input
- Power Good Indicator
- Output Discharge Function
- Output Current Limit Protection
- Hiccup Mode Output Short Circuit Protection
- Output Over Voltage Protection
- Input UVLO
- Over Temperature Protection with Auto Recovery
- RoHS Compliant and Halogen Free
- Compact Package: QFN3×3-20

Applications

- LCD-TV/Net-TV/3DTV
- Set Top Box
- Notebook
- High Power AP

Typical Applications

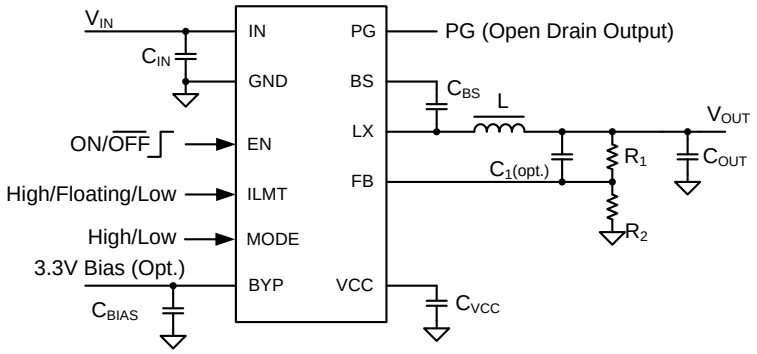

Figure1. Schematic Diagram

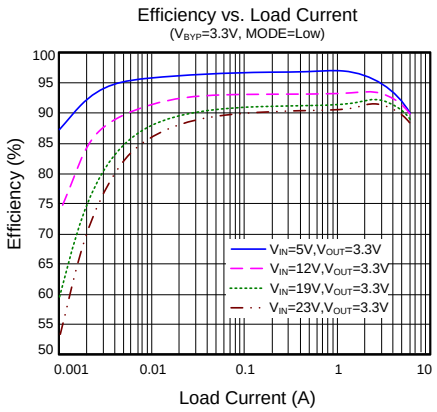

Figure2. Efficiency vs. Load Current

© 2019 Silergy Corp. All Rights Reserved.

Pinout (top view)

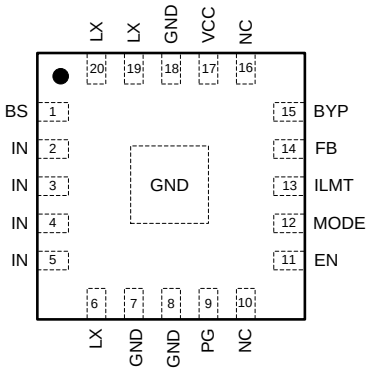

(QFN3×3-20)

Top Mark: AWR***xyz***, **(**Device code: AWR, ***x=year code, y=week code, z= lot number code*****)**

Pin Name	Pin Number	Pin Description
BS	1	Boot-strap pin. Supply high side gate driver. Decouple this pin to the LX pin with a 0.1μF ceramic capacitor.
IN	2,3,4,5	Input pin. Decouple this pin to the GND pin with at least a 10μF ceramic capacitor.
LX	6,19,20	Inductor pin. Connect this pin to the switching node of the inductor.
GND	7,8,18,EP	Ground pin.
PG	9	Power good Indicator. Open-drain output when the output voltage is within 90% to 120% of regulation point.
NC	10, 16	Not connected
EN	11	Enable pin. Pull this pin high to turn on the IC. Do not leave this pin floating.
MODE	12	Operating mode selection under light load. Pull this pin low for PFM operating, and pull this pin high for PWM operation. Do not leave this pin floating.
ILMT	13	Output current limit threshold selection.
FB	14	Output feedback pin. Connected to the center point of the resistor divider.
BYP	15	External 3.3V bypass power supply input. Decouple this pin to the GND with a 1μF ceramic capacitor. Leave this pin floating if it is not used.
VCC	17	Internal 3.3V LDO output. Power supply for internal analog circuits and driving circuit. Decouple this pin to the GND with a 2.2μF ceramic capacitor.

© 2019 Silergy Corp. All Rights Reserved.

Block Diagram

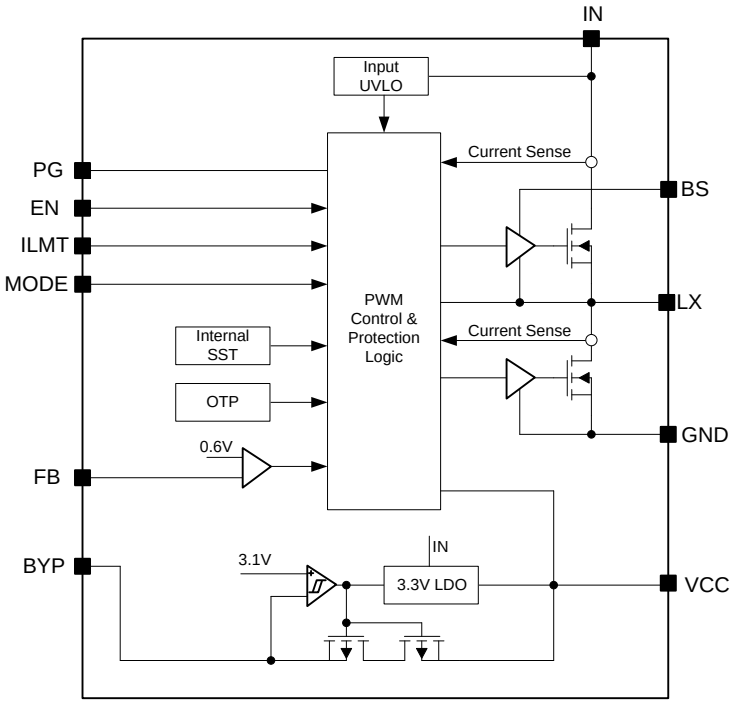

Figure3. Block Diagram

Absolute Maximum Ratings (Note 1)

IN ---------- 25V
BS-LX ---------- 4V
EN, ILMT, MODE, PG, LX ---------- 25V
VCC, FB ---------- 4V
BYP ---------- 6V
Power Dissipation,
P_D @ T_A = 25°C QFN3×3-20 ---------- 3.3W
Package Thermal Resistance (Note 2)
θ_{JA}, QFN3×3-20 ---------- 30°C/W
θ_{JC}, QFN3×3-20 ---------- 4.5°C/W
Junction Temperature Range ---------- 150°C
Lead Temperature (Soldering, 10 sec.) ---------- 260°C
Storage Temperature Range ---------- -65°C to 150°C
Dynamic LX voltage in 10ns duration ---------- IN+3V to GND-5V

Recommended Operating Conditions (Note 3)

Supply Input Voltage ---------- 4V to 23V
Junction Temperature Range ---------- -40°C to 125°C
Ambient Temperature Range ---------- -40°C to 85°C

© 2019 Silergy Corp. All Rights Reserved.

Electrical Characteristics

(V_{IN} = 12V, T_A = 25°C unless otherwise specified)

Parameter	Symbol	Test Conditions	Min	Typ	Max	Unit
Input Voltage Range	V_{IN}		4		23	V
Input UVLO Threshold	V_{UVLO}	V_{IN} rising			3.9	V
UVLO Hysteresis	V_{HYS}			0.1		V
Quiescent Current	I_Q	I_{OUT}=0, V_{OUT}=V_{SET}×105%		120	145	μA
Shutdown Current	I_{SHDN}	EN=0,		6	10	μA
Feedback Reference Voltage	V_{REF}		0.594	0.6	0.606	V
Top FET RON	$R_{DS(ON)1}$			38		mΩ
Bottom FET RON	$R_{DS(ON)2}$			19		mΩ
Output Discharge Current	I_{DIS}			70		mA
Top FET Current Limit	$I_{LMT,HSFET}$			17		A
Bottom FET Current Limit	$I_{LMT, LSFET1}$	ILMT=Low	6.7	7.8	8.9	A
		ILMT=Floating	9.3	10.6	11.9	A
		ILMT=High	12	13.3	14.8	A
Bottom FET Reverse Current Limit	$I_{LIM,LSFET2}$		1.5	3	4.5	A
Soft-start Time	t_{SS}			1.3		ms
EN/MODE Rising Threshold	V_{ENH}		1			V
EN/MODE Falling Threshold	V_{ENL}				0.4	V
ILMT Rising Threshold	V_{ILMTH}		Vcc-0.5			V
ILMT Falling Threshold	V_{ILMTL}				0.5	V
Switching Frequency	f_{OSC}	V_{OUT}=5V	510	600	690	kHz
Min ON Time	$t_{ON,MIN}$	V_{IN}=V_{INMAX}		50		ns
Min OFF Time	$t_{OFF,MIN}$			150		ns
VCC Output Voltage	V_{CC}	With 1mA load	3.2	3.3	3.4	V
Output Over Voltage Threshold	V_{OVP}	V_{FB} rising	115	120	125	%V_{REF}
Output Over Voltage Hysteresis	$V_{OVP,HYS}$			1.5		%V_{REF}
Output OVP Delay	$t_{OVP,DLY}$			20		μs
Output Under Voltage Protection Threshold	V_{UVP}	V_{FB} falling	57.5	62.5	67.5	%V_{REF}
Output UVP Delay	$t_{UVP,DLY}$			200		us
Power Good Threshold	V_{PG}	V_{FB} rising (Good)		92		%V_{REF}
Power Good Hysteresis	$V_{PG,HYS}$			1.5		%V_{REF}
Power Good Delay	$t_{PG,RISING}$	Low to high		200		μs
	$t_{PG,FALLING}$	High to low		10		μs
Bypass Switch Turn-on Voltage	V_{BYP}		2.97	3.1	3.21	V
Bypass Switch Switchover Hysteresis	$V_{BYP,HYS}$			0.15		V
Bypass Switch OVP	$V_{BYP,OVP}$			120		%V_{CC}
Thermal Shutdown Temperature	T_{SD}			150		°C
Thermal Shutdown hysteresis	T_{HYS}			15		°C

© 2019 Silergy Corp. All Rights Reserved.

Note 1: Stresses beyond the "Absolute Maximum Ratings" may cause permanent damage to the device. These are stress ratings only. Functional operation of the device at these or any other conditions beyond those indicated in the operational sections of the specification is not implied. Exposure to absolute maximum rating conditions for extended periods may affect device reliability

Note 2: Package thermal resistance is measured in the natural convection at T_A = 25°C on a four-layer Silergy evaluation board.

Note 3: The device is not guaranteed to function outside its operating conditions.

© 2019 Silergy Corp. All Rights Reserved.

Typical Performance Characteristics

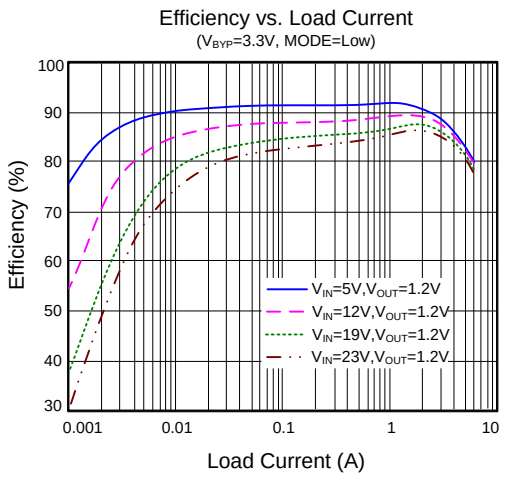

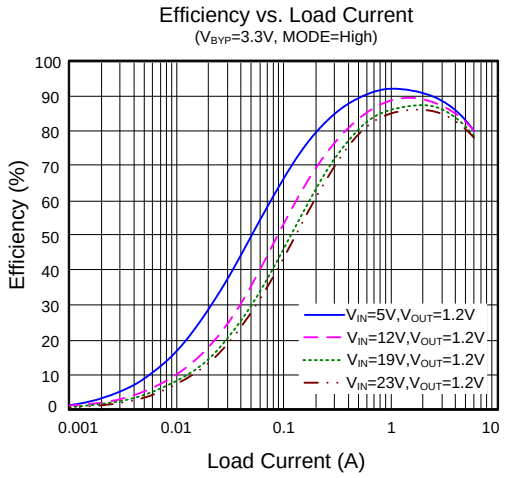

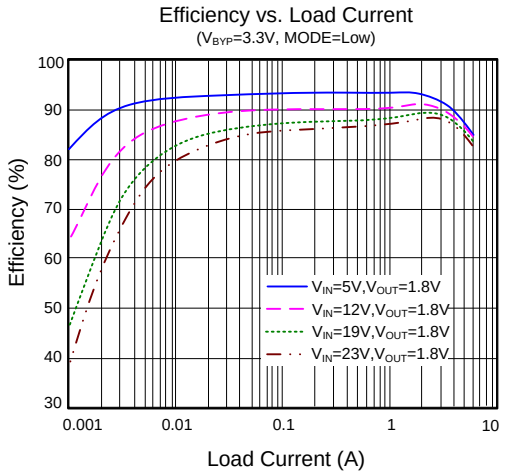

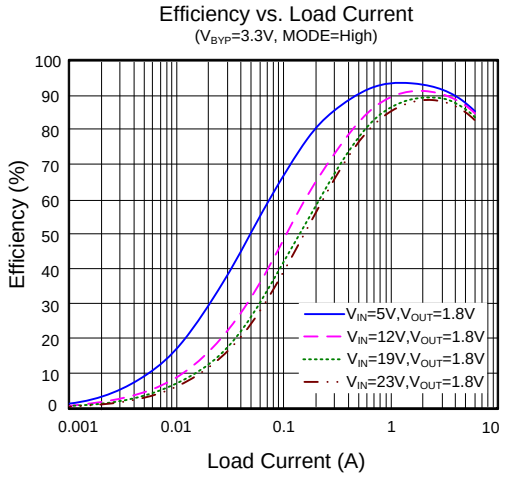

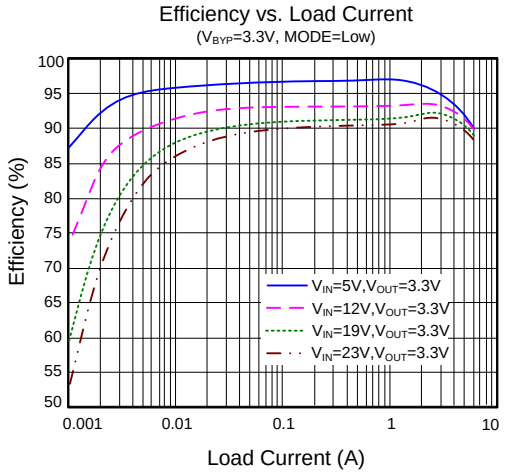

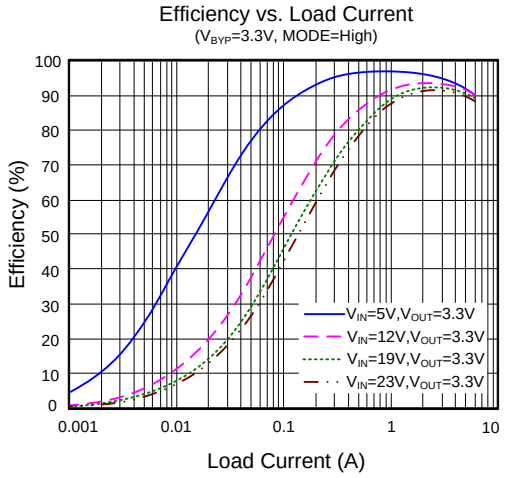

© 2019 Silergy Corp. All Rights Reserved.

Efficiency vs. Load Current
(V_{BYP}=3.3V, MODE=Low)

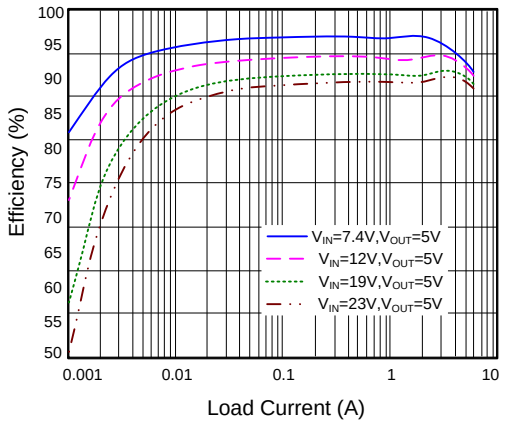

Efficiency vs. Load Current
(V_{BYP}=3.3V,MODE=High)

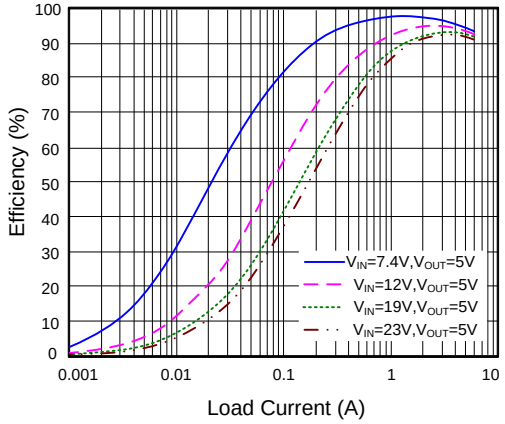

Load Regulation
(V_{BYP}=3.3V, MODE=Low)

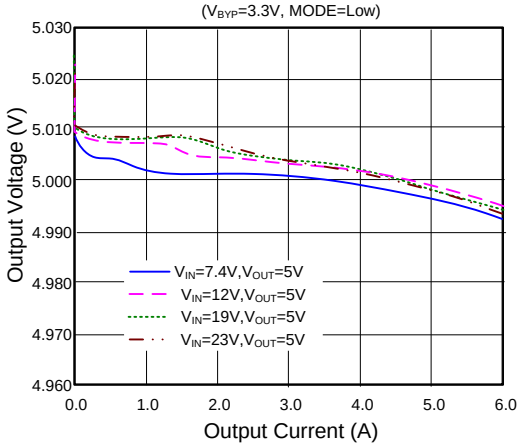

Load Regulation
(V_{BYP}=3.3V, MODE=High)

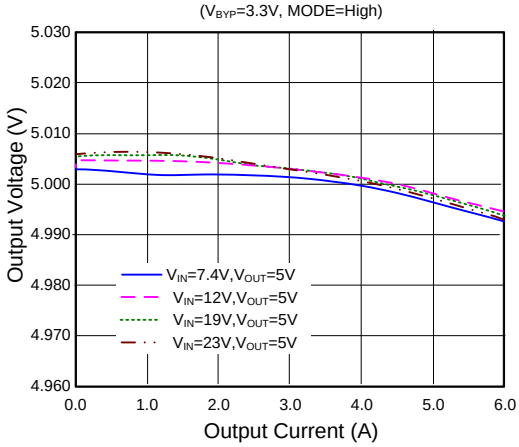

Line Regulation
(V_{BYP}=3.3V, MODE=Low)

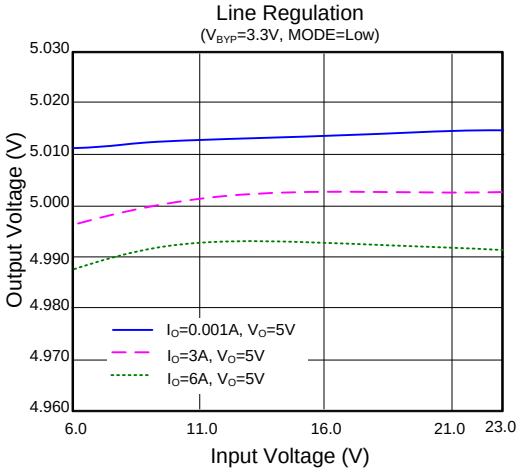

Line Regulation
(V_{BYP}=3.3V, MODE=High)

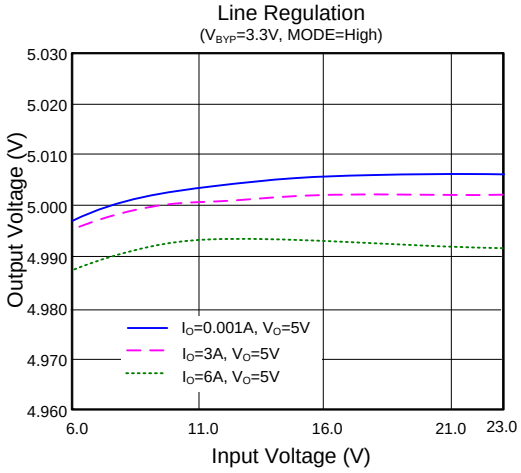

© 2019 Silergy Corp. All Rights Reserved.

Load Transient

(V_{IN}=12V, V_{OUT}=3.3V, I_{OUT}=0.6-6A, MODE=Low)

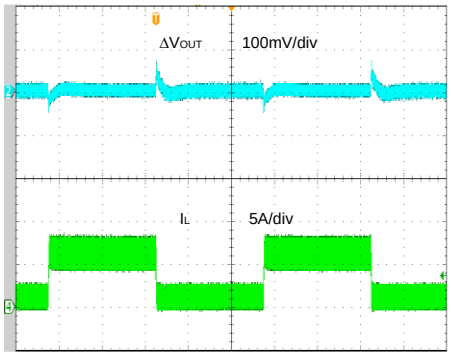

Time (200μs/div)

Load Transient

(V_{IN}=12V, V_{OUT}=3.3V, I_{OUT}=0.6-6A, MODE=High)

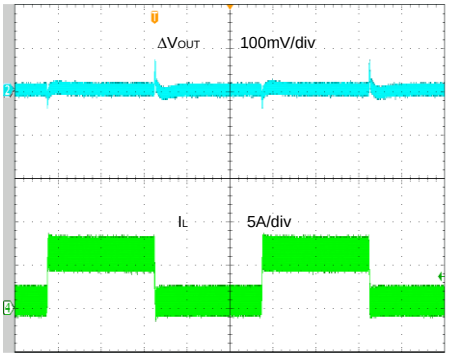

Time (200μs/div)

Output Ripple

(V_{IN}=12V, V_O=3.3V, I_O=0A, MODE=Low)

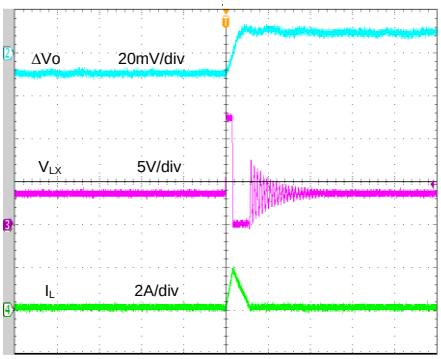

Time (2μs/div)

Output Ripple

(V_{IN}=12V, V_O=3.3V, I_O=0A, MODE=High)

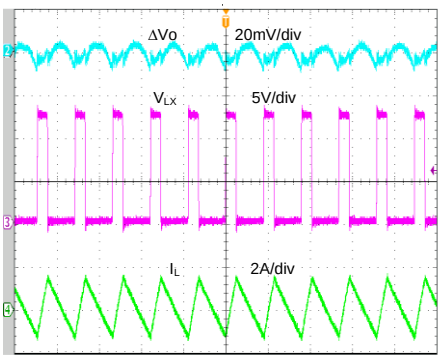

Time (2μs/div)

Output Ripple

(V_{IN}=12V, V_O=3.3V, I_O=3A)

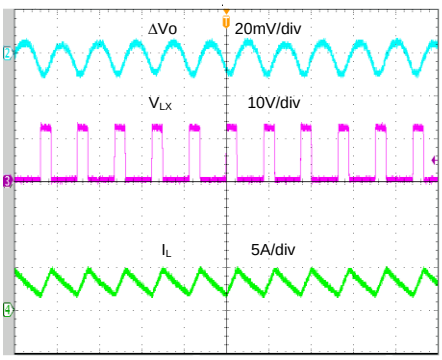

Time (2μs/div)

Output Ripple

(V_{IN}=12V, V_O=3.3V, I_O=6A)

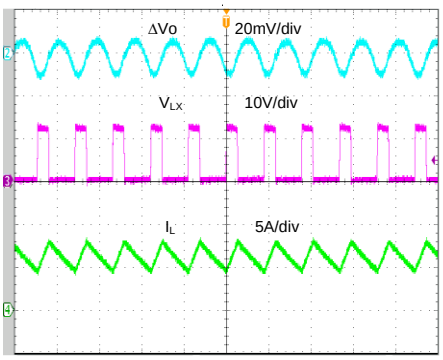

Time (2μs/div)

© 2019 Silergy Corp. All Rights Reserved.

Startup from V_{IN}

(V_{IN}=12V, V_{OUT}=3.3V, I_O=6A)

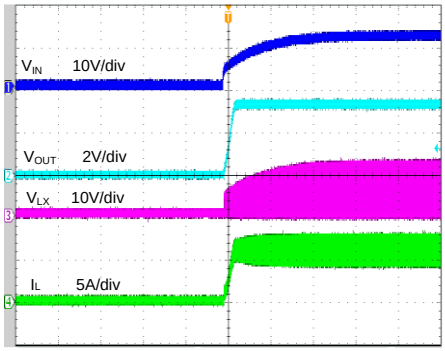

Time (4ms/div)

Shutdown from V_{IN}

(V_{IN}=12V, V_{OUT}=3.3V, I_O=6A)

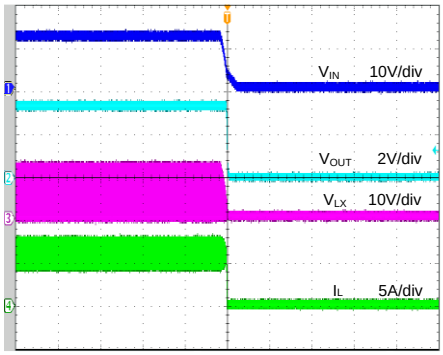

Time (4ms/div)

Startup from Enable

(V_{IN}=12V, V_{OUT}=3.3V, I_O=6A)

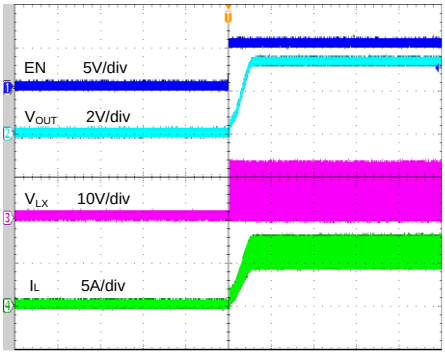

Time (2ms/div)

Shutdown from Enable

(V_{IN}=12V, V_{OUT}=3.3V, I_O=6A)

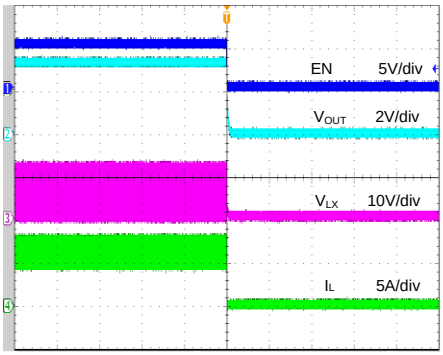

Time (2ms/div)

Short Circuit Protection

(V_{IN}=12V, V_{OUT}=3.3V, I_O=0A~ Short, ILMT: Pull Low)

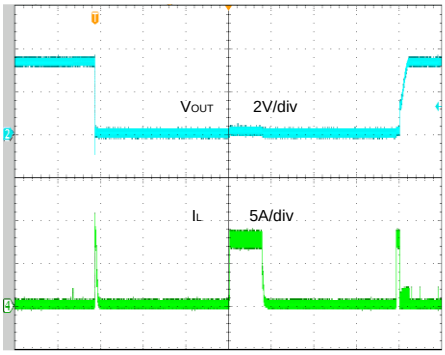

Time (4ms/div)

Short Circuit Protection

(V_{IN}=12V, V_{OUT}=3.3V, I_O=6A~ Short, ILMT: Pull Low)

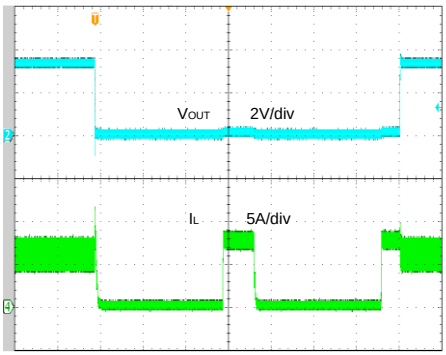

Time (4ms/div)

© 2019 Silergy Corp. All Rights Reserved.

Short Circuit Protection

(V_{IN}=12V, V_{OUT}=3.3V, I_O=0A~ Short, ILMT: Floating)

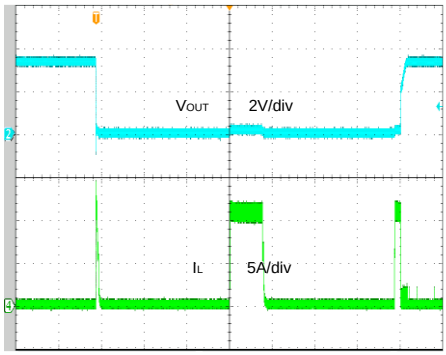

Time (4ms/div)

Short Circuit Protection

(V_{IN}=12V, V_{OUT}=3.3V, I_O=6A~ Short, ILMT: Floating)

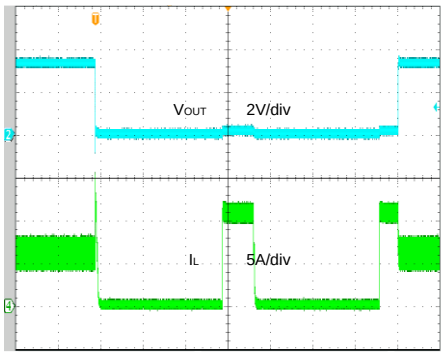

Time (4ms/div)

Short Circuit Protection

(V_{IN}=12V, V_{OUT}=3.3V, I_O=0A~ Short, ILMT: Pull High)

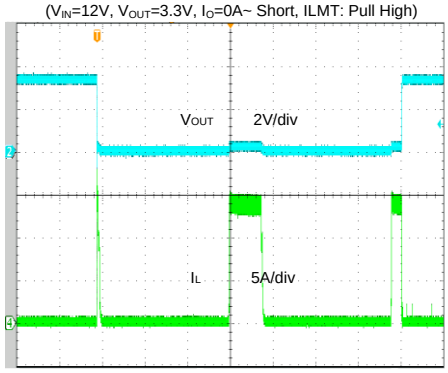

Time (4ms/div)

Short Circuit Protection

(V_{IN}=12V, V_{OUT}=3.3V, I_O=6A~ Short, ILMT: Pull High)

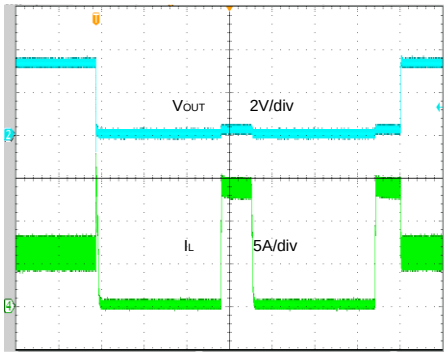

Time (4ms/div)

© 2019 Silergy Corp. All Rights Reserved.

Operation

The SY8286A develops a high efficiency synchronous step-down DC/DC regulator capable of delivering 6A current. The device integrates main switch and synchronous switch with very low $R_{DS(ON)}$ to minimize the conduction loss.

The SY8286A operates over a wide input voltage range from 4V to 23V. The DC/DC regulator adopts the instant PWM architecture to achieve fast transient responses for high step down applications and high efficiency at light loads. The device provides various protection features for reliable operation. In addition, it operates at pseudo-constant frequency of 600kHz to minimize the size of inductor and capacitor.

Applications Information

Because of the high integration in the SY8286A, the application circuit based on this regulator is rather simple. Only the input capacitor C_{IN}, the output capacitor C_{OUT}, the output inductor L and the feedback resistors (R_1 and R_2) need to be selected for the targeted applications specifications.

Feedback Resistor Dividers R_1 and R_2:

Choose R_1 and R_2 to program the proper output voltage. To minimize the power consumption under light load, it is desirable to choose large resistance values for both R_1 and R_2. A value of between 10kΩ and 1MΩ is highly recommended for both resistors. If V_{OUT} is 1.2V, R_1=100kΩ is chosen, then using the following equation, R_2 can be calculated to be 100kΩ:

$$R_2 = \frac{0.6V}{V_{OUT} - 0.6V} R_1$$

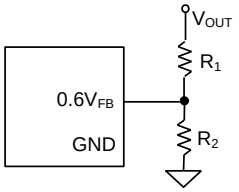

Input Capacitor C_{IN}:

The ripple current through input capacitor is calculated as:

$$I_{CIN_RMS} = I_{OUT} \times \sqrt{D(1-D)}\ .$$

To minimize the potential noise problem, a typical X5R or better grade ceramic capacitor should be placed really close to the IN and the GND pins. Care should be taken to minimize the loop area formed by C_{IN}, and the IN/GND pins. In this case, a 10μF low ESR ceramic capacitor is recommended.

Output Capacitor C_{OUT}:

The output capacitor is selected to handle the output ripple noise requirements. Both steady state ripple and transient requirements must be taken into consideration when selecting this capacitor. For most applications, an X5R or better grade ceramic capacitor greater than 66μF capacitance can work well. The capacitance derating with DC voltage must be considered.

Output Inductor L:

There are several considerations in choosing this inductor.

1) Choose the inductance to provide the desired ripple current. It is suggested to choose the ripple current to be about 30~40% of the maximum output current. In PWM mode operation, 30% of the maximum output current is suggested, in order not to trigger bottom FET reverse current limit at light load condition. The inductance is calculated as:

$$L = \frac{V_{OUT}(1 - V_{OUT}/V_{IN,MAX})}{f_{SW} \times I_{OUT,MAX} \times 30\%}$$

Where fsw is the switching frequency and $I_{OUT,MAX}$ is the maximum load current.

The SY8286A is quite tolerant of different ripple current amplitude. Consequently, the final choice of inductance can be slightly off the calculation value without significantly impacting the performance.

2) The saturation current rating of the inductor must be selected to be greater than the peak inductor current under full load conditions.

$$I_{SAT,MIN} > I_{OUT,MAX} + \frac{V_{OUT}(1-V_{OUT}/V_{IN,MAX})}{2 \times f_{SW} \times L}$$

3) The DCR of the inductor and the core loss at the switching frequency must be low enough to achieve the desired efficiency requirement. It is desirable to choose an inductor with DCR<10mΩ to achieve a good overall efficiency.

Current Limit Setting

The SY8286A features both cycle by cycle peak and valley current limit. The high side MOSFET is turned off and low side MOSFET is turned on when peak current limit is triggered. When the valley current limit is triggered, the device will not allow high side MOSFET turning on until the valley current drops below the threshold. The valley current limit threshold is selectable by pulling the ILMT pin low, high or leaving it floating.

© 2019 Silergy Corp. All Rights Reserved.

Soft-start

In order to limit the input inrush current, the SY8286A has a built-in soft-start circuit which controls the output voltage ramp up speed during startup. The typical soft-start time is 1.3ms.

Enable Operation

Pulling the EN pin low will shut down the device. During shutdown mode, the SY8286A shutdown current drops to lower than 10μA. Driving the EN pin high will turn on the IC again.

External Bootstrap Capacitor

This capacitor provides the gate driver voltage for internal high side MOSEFET. A 100nF low ESR ceramic capacitor connected between the BS pin and the LX pin is recommended.

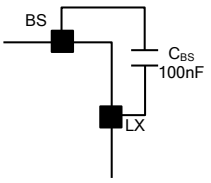

VCC LDO and BYP Input

The 3.3V VCC LDO provides the power supply for internal control and drive circuit. Bypass this pin to ground with a 2.2μF ceramic capacitor. The control and drive circuit can also be powered by external 3.3V power supply. When a 3.3V external power supply is connected to the BYP pin, the VCC LDO is turned off and the switch between BYP and VCC is turned on. The overall efficiency may be improved by connecting the BYP pin to external 3.3V switching power supply. Leave the BYP pin floating if this feature is not used.

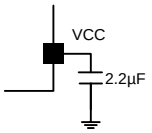

Power Good Indication

PG is an open-drain output pin. This pin will be pulled to ground if output voltage is lower than 90% or higher than 120% of regulation voltage. Otherwise this pin will go to a high impedance state.

Light Load Operation Mode Selection

PFM or PWM light load operation is selected by the MODE pin. Pull the MODE pin low for PFM operation, and pull this pin high for PWM operation.

Load Transient Considerations:

The SY8286A adopts the instant PWM architecture to achieve good stability and fast transient responses. In applications with high step load current, adding an RC network R_{FF} and C_{FF} parallel with R_1 may further speed up the load transient responses.

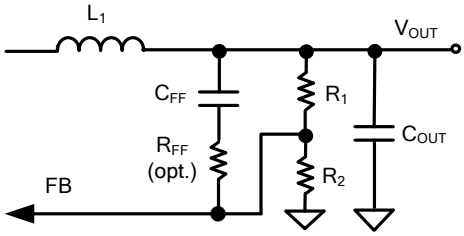

Switching Frequency

The SY8286A uses constant-on-time (COT) control and there is no dedicated oscillator in the IC. When output voltage setting is low and input voltage is high, the switching on-time may be limited by the internal minimum on-time limit, and switching frequency will decrease. Table 1 shows the switching frequency vs. output voltage when V_{IN}=12V.

Table1: f_{SW} vs. V_{OUT}

V_{OUT}(V) \ f_{SW}(kHz)	Min	Typ	Max
5	510	600	690
3.3	510	600	690
2.5	510	600	690
1.8	510	600	690
1.5	503	592	681
1.2	452	565	678
1	428	535	642
0.9	408	510	612

Layout Design:

The layout design of the SY8286A is relatively simple. For the best efficiency and minimum noise problem, the following components should be placed close to the IC: C_{IN}, C_{VCC}, L, R_1 and R_2.

1) It is desirable to maximize the PCB copper area connecting to the GND pin to achieve the best thermal and noise performance. If the board space allowed, a ground plane is highly desirable.

2) C_{IN} must be close to the pins IN and GND. The loop area formed by C_{IN} and GND must be minimized.

3) The PCB copper area associated with the LX pin must be minimized to avoid the potential noise problem.

4) The components R_1 and R_2, and the trace connected to the FB pin must NOT be adjacent to the LX net on the PCB layout to avoid the noise problem.

© 2019 Silergy Corp. All Rights Reserved.

5) If the system chip interfacing with the EN pin has a high impedance state at shutdown mode and the IN pin is connected directly to a power source such as a Li-Ion battery. A 1MΩ pull-down resistor should be placed between the enable pin and the GND pins to prevent the noise from falsely turning on the regulator at shutdown mode.

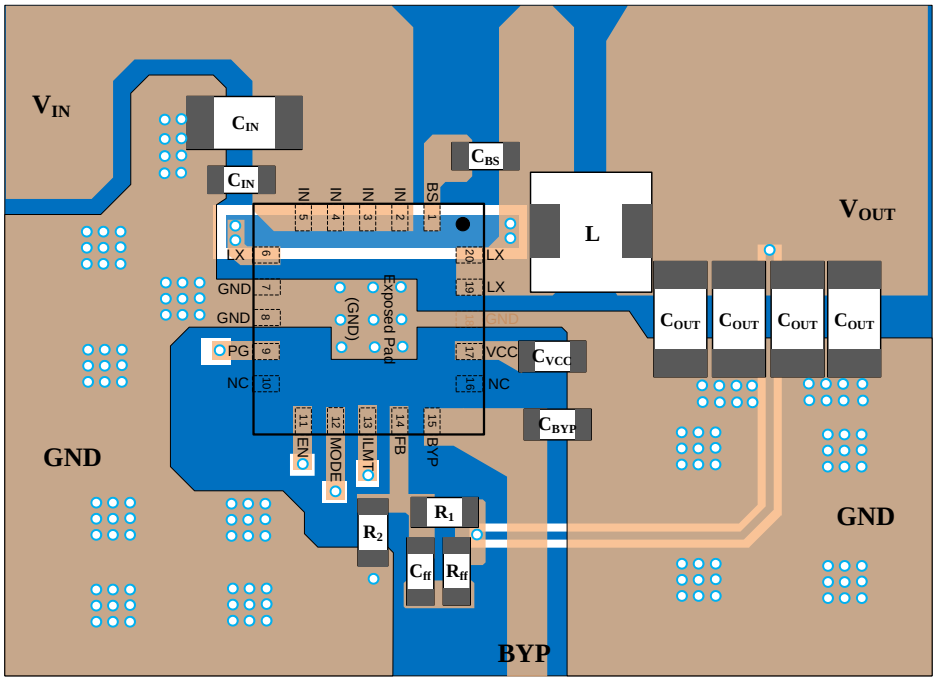

Figure4. PCB Layout Suggestion

© 2019 Silergy Corp. All Rights Reserved.

QFN3×3-20 Package Outline

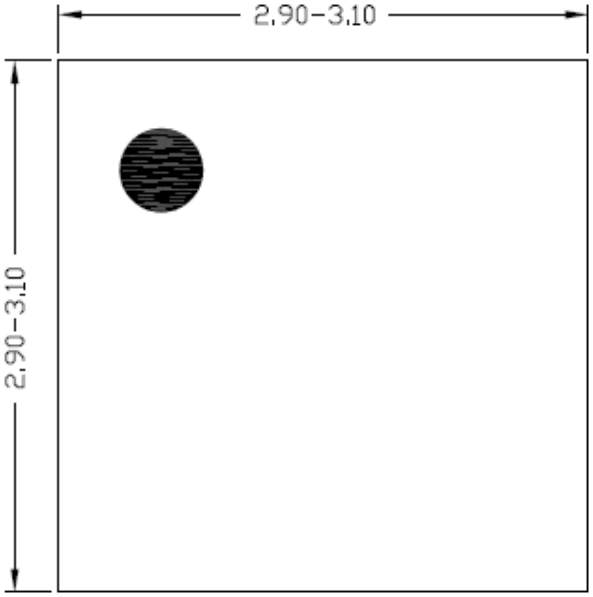

Top view

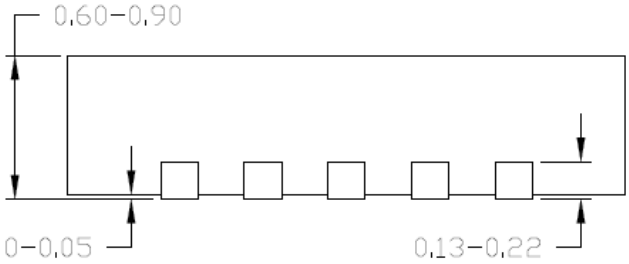

Side view

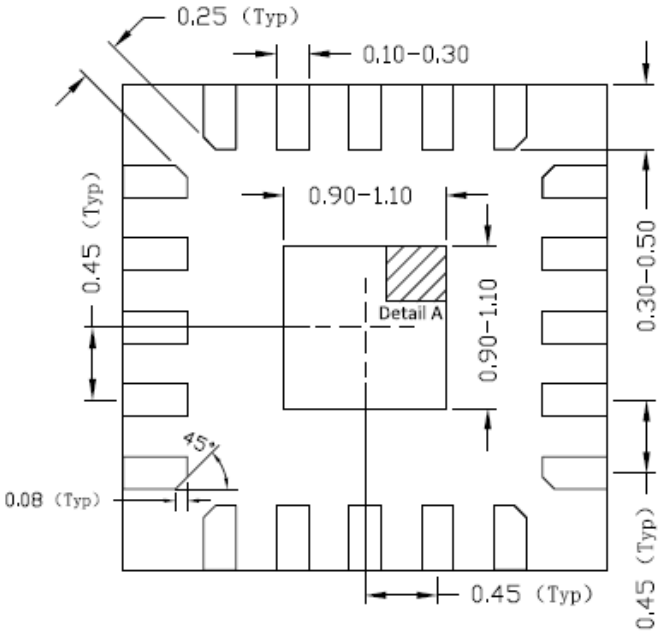

Bottom view

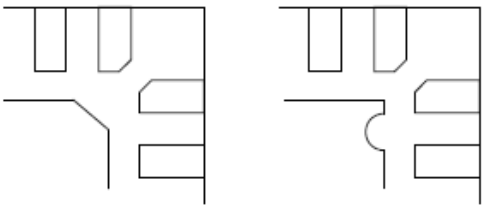

Detail A
Pin1 Identifier: two options

© 2019 Silergy Corp. All Rights Reserved.

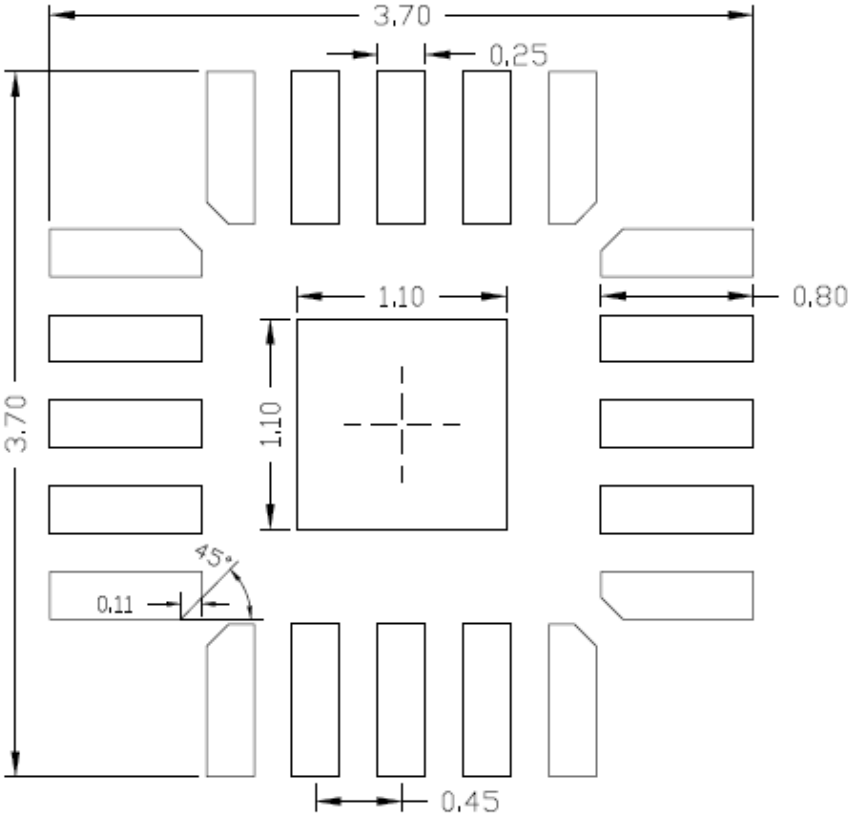

Recommended PCB layout
(Reference only)

Notes: All dimension in millimeter and exclude mold flash & metal burr.

© 2019 Silergy Corp. All Rights Reserved.

Taping & Reel Specification

1. QFN3×3-20 taping orientation

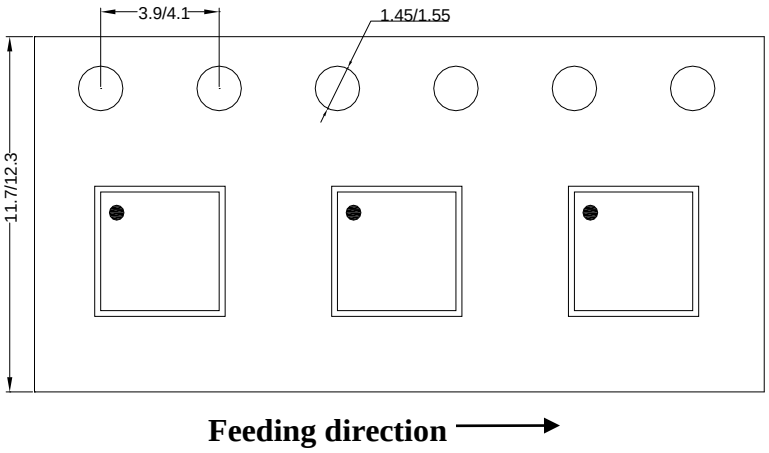

2. Carrier Tape & Reel specification for packages

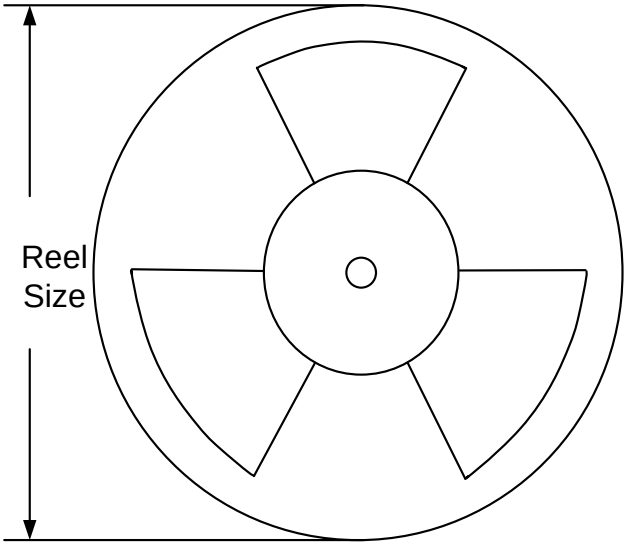

Package type	Tape width (mm)	Pocket pitch(mm)	Reel size (Inch)	Trailer length(mm)	Leader length (mm)	Qty per reel
QFN3×3	12	8	13"	400	400	5000

3. Others: NA

© 2019 Silergy Corp. All Rights Reserved.

IMPORTANT NOTICE

1. **Right to make changes.** Silergy and its subsidiaries (hereafter Silergy) reserve the right to change any information published in this document, including but not limited to circuitry, specification and/or product design, manufacturing or descriptions, at any time and without notice. This document supersedes and replaces all information supplied prior to the publication hereof. Buyers should obtain the latest relevant information before placing orders and should verify that such information is current and complete. All semiconductor products are sold subject to Silergy's standard terms and conditions of sale.

2. Applications. Application examples that are described herein for any of these products are for illustrative purposes only. Silergy makes no representation or warranty that such applications will be suitable for the specified use without further testing or modification. Buyers are responsible for the design and operation of their applications and products using Silergy products. Silergy or its subsidiaries assume no liability for any application assistance or designs of customer products. It is customer's sole responsibility to determine whether the Silergy product is suitable and fit for the customer's applications and products planned. To minimize the risks associated with customer's products and applications, customer should provide adequate design and operating safeguards. Customer represents and agrees that it has all the necessary expertise to create and implement safeguards which anticipate dangerous consequences of failures, monitor failures and their consequences, lessen the likelihood of failures that might cause harm and take appropriate remedial actions. Silergy assumes no liability related to any default, damage, costs or problem in the customer's applications or products, or the application or use by customer's third-party buyers. Customer will fully indemnify Silergy, its subsidiaries, and their representatives against any damages arising out of the use of any Silergy components in safety-critical applications. It is also buyers' sole responsibility to warrant and guarantee that any intellectual property rights of a third party are not infringed upon when integrating Silergy products into any application. Silergy assumes no responsibility for any said applications or for any use of any circuitry other than circuitry entirely embodied in a Silergy product.

3. **Limited warranty and liability.** Information furnished by Silergy in this document is believed to be accurate and reliable. However, Silergy makes no representation or warranty, expressed or implied, as to the accuracy or completeness of such information and shall have no liability for the consequences of use of such information. In no event shall Silergy be liable for any indirect, incidental, punitive, special or consequential damages, including but not limited to lost profits, lost savings, business interruption, costs related to the removal or replacement of any products or rework charges, whether or not such damages are based on tort or negligence, warranty, breach of contract or any other legal theory. Notwithstanding any damages that customer might incur for any reason whatsoever, Silergy' aggregate and cumulative liability towards customer for the products described herein shall be limited in accordance with the Standard Terms and Conditions of Sale of Silergy.

4. **Suitability for use.** Customer acknowledges and agrees that it is solely responsible for compliance with all legal, regulatory and safety-related requirements concerning its products, and any use of Silergy components in its applications, notwithstanding any applications-related information or support that may be provided by Silergy. Silergy products are not designed, authorized or warranted to be suitable for use in life support, life-critical or safety-critical systems or equipment, nor in applications where failure or malfunction of an Silergy product can reasonably be expected to result in personal injury, death or severe property or environmental damage. Silergy assumes no liability for inclusion and/or use of Silergy products in such equipment or applications and therefore such inclusion and/or use is at the customer's own risk.

5. **Terms and conditions of commercial sale**. Silergy products are sold subject to the standard terms and conditions of commercial sale, as published at http://www.silergy.com/stdterms, unless otherwise agreed in a valid written individual agreement specifically agreed to in writing by an authorized officer of Silergy. In case an individual agreement is concluded only the terms and conditions of the respective agreement shall apply. Silergy hereby expressly objects to and denies the application of any customer's general terms and conditions with regard to the purchase of Silergy products by the customer.

6. **No offer to sell or license**. Nothing in this document may be interpreted or construed as an offer to sell products that is open for acceptance or the grant, conveyance or implication of any license under any copyrights, patents or other industrial or intellectual property rights. Silergy makes no representation or warranty that any license, either express or implied, is granted under any patent right, copyright, mask work right, or other intellectual property right. Information published by Silergy regarding third-party products or services does not constitute a license to use such products or services or a warranty or endorsement thereof. Use of such information may require a license from a third party under the patents or other intellectual property of the third party, or a license from Silergy under the patents or other intellectual property of Silergy.

For more information, please visit: www.silergy.com

© 2018 Silergy Corp. **All Rights Reserved.**

© 2019 Silergy Corp. All Rights Reserved.