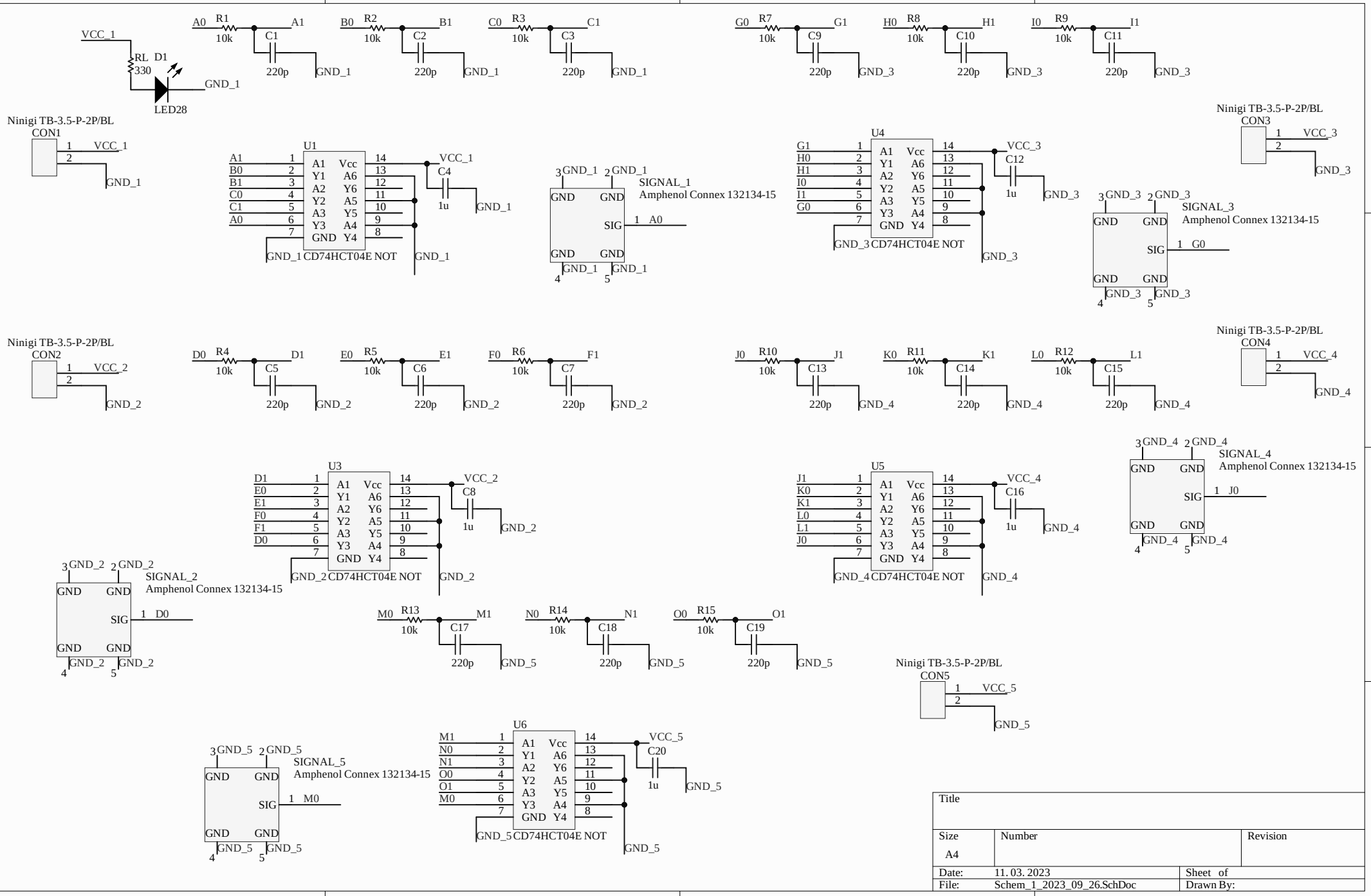
VCC_1
RL 330
D1
LED28
GND_1
A0 R1 10k A1
C1 220p GND_1
B0 R2 10k B1
C2 220p GND_1
C0 R3 10k C1
C3 220p GND_1
G0 R7 10k G1
C9 220p GND_3
H0 R8 10k H1
C10 220p GND_3
I0 R9 10k I1
C11 220p GND_3
Ninigi TB-3.5-P-2P/BL
CON1
VCC_1
GND_1
U1
A1 B0 B1 C0 C1 A0
A1 Y1 A2 Y2 A3 Y3 GND
Vcc A6 Y6 A5 Y5 A4 Y4
VCC_1
C4 1u GND_1
GND_1 CD74HCT04E NOT
SIGNAL_1
Amphenol Connex 132134-15
GND GND SIG GND GND
1 A0
U4
G1 H0 H1 I0 I1 G0
VCC_3
C12 1u GND_3
GND_3 CD74HCT04E NOT
Ninigi TB-3.5-P-2P/BL
CON3
VCC_3
GND_3
SIGNAL_3
Amphenol Connex 132134-15
1 G0
Ninigi TB-3.5-P-2P/BL
CON2
VCC_2
GND_2
D0 R4 10k D1
C5 220p GND_2
E0 R5 10k E1
C6 220p GND_2
F0 R6 10k F1
C7 220p GND_2
J0 R10 10k J1
C13 220p GND_4
K0 R11 10k K1
C14 220p GND_4
L0 R12 10k L1
C15 220p GND_4
Ninigi TB-3.5-P-2P/BL
CON4
VCC_4
GND_4
U3
D1 E0 E1 F0 F1 D0
VCC_2
C8 1u GND_2
GND_2 CD74HCT04E NOT
SIGNAL_2
Amphenol Connex 132134-15
1 D0
U5
J1 K0 K1 L0 L1 J0
VCC_4
C16 1u GND_4
GND_4 CD74HCT04E NOT
SIGNAL_4
Amphenol Connex 132134-15
1 J0
M0 R13 10k M1
C17 220p GND_5
N0 R14 10k N1
C18 220p GND_5
O0 R15 10k O1
C19 220p GND_5
Ninigi TB-3.5-P-2P/BL
CON5
VCC_5
GND_5
SIGNAL_5
Amphenol Connex 132134-15
1 M0
U6
M1 N0 N1 O0 O1 M0
VCC_5
C20 1u GND_5
GND_5 CD74HCT04E NOT
Title
Size A4
Number
Revision
Date: 11. 03. 2023
Sheet of
File: Schem_1_2023_09_26.SchDoc
Drawn By:

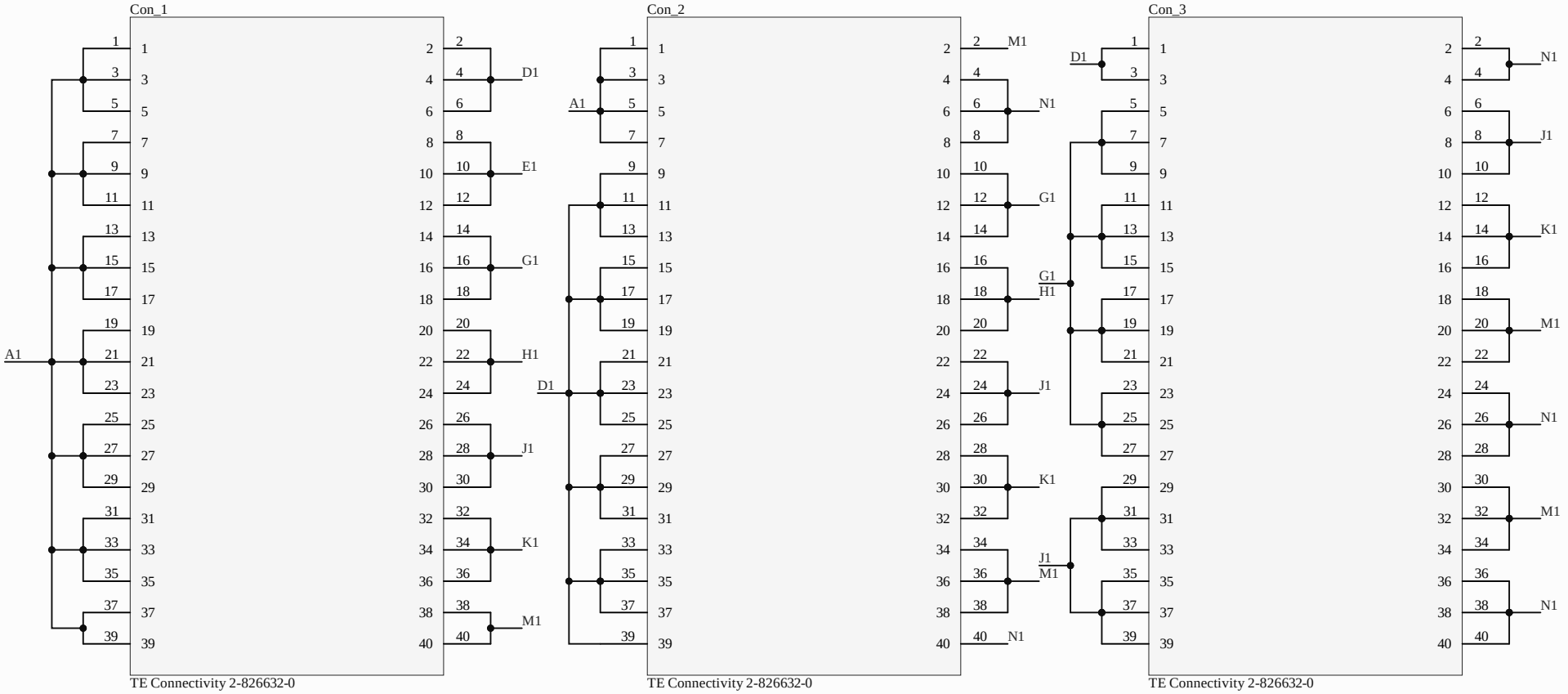

Title		
Size A4	Number	Revision
Date: 11. 03. 2023		Sheet of
File: tuning.SchDoc		Drawn By:

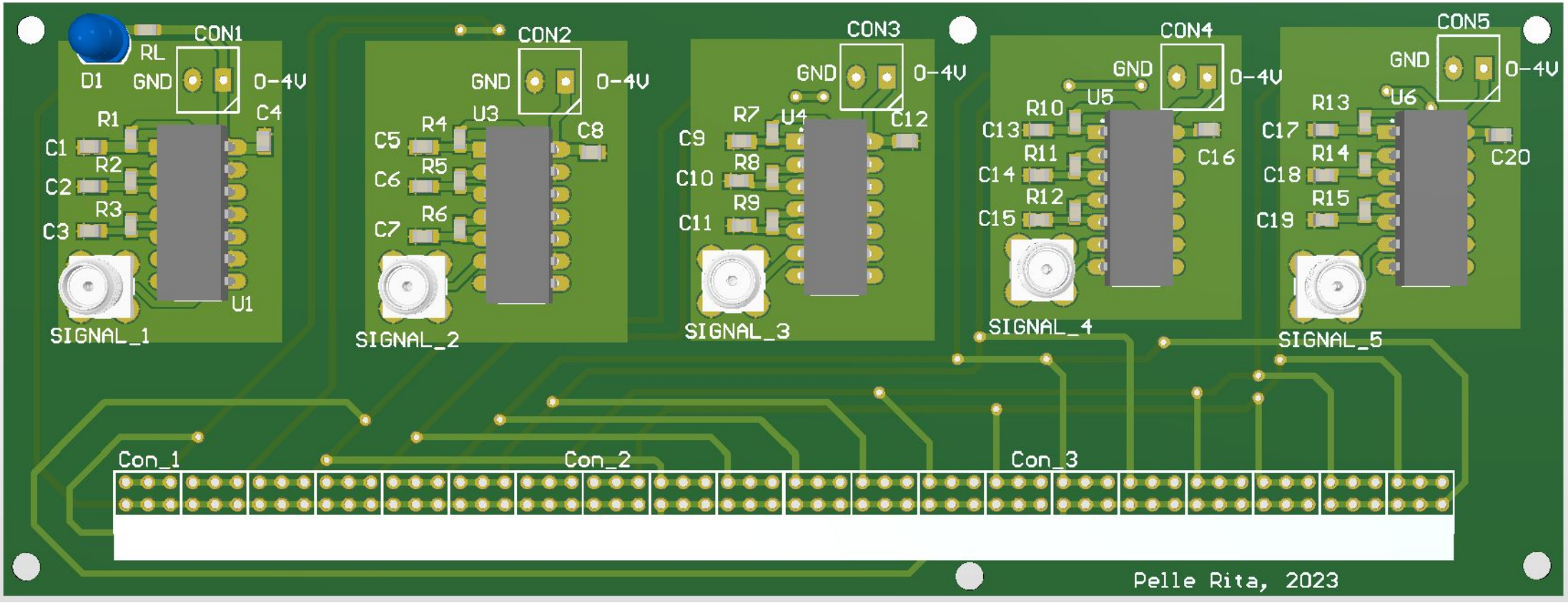
CON1
RL
D1
GND
0-4V
R1
C4
C1
R2
C2
R3
C3
U1
SIGNAL_1
CON2
GND
0-4V
U3
R4
C5
C8
R5
C6
R6
C7
SIGNAL_2
CON3
GND
0-4V
R7
U4
C12
C9
R8
C10
R9
C11
SIGNAL_3
CON4
GND
0-4V
U5
R10
C13
C16
R11
C14
R12
C15
SIGNAL_4
CON5
GND
0-4V
R13
U6
C17
R14
C20
C18
R15
C19
SIGNAL_5
Con_1
Con_2
Con_3
Pelle Rita, 2023

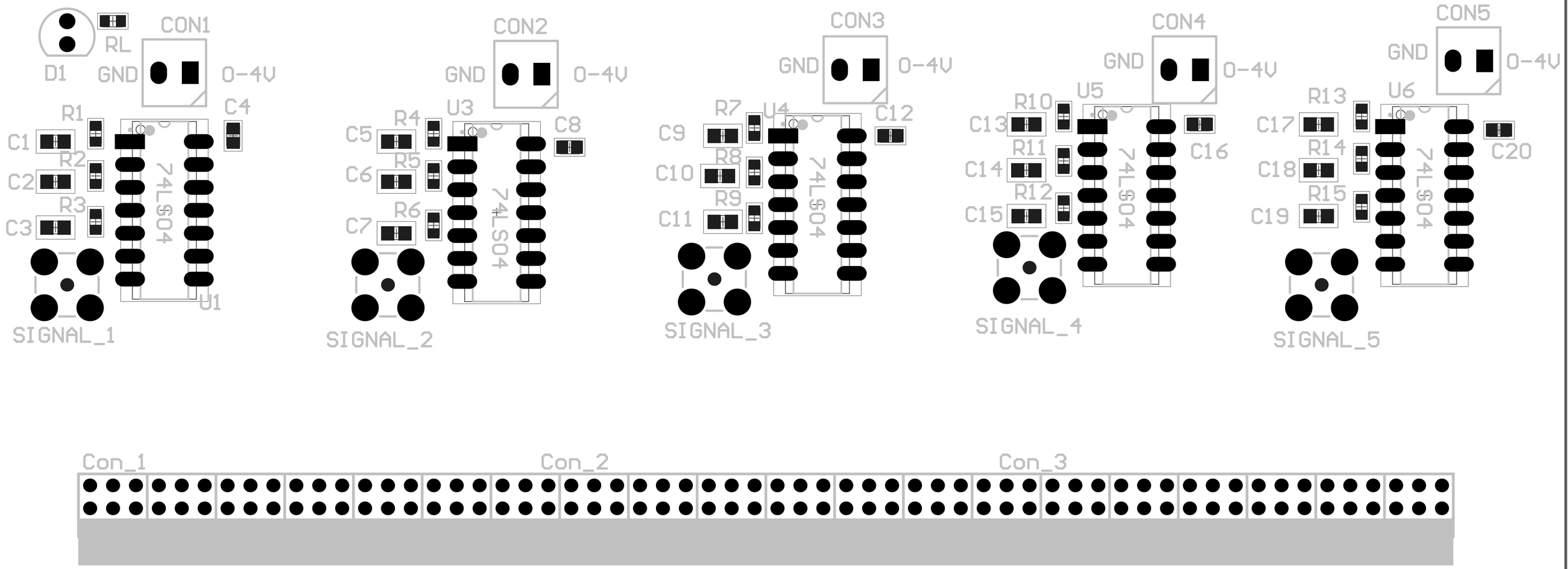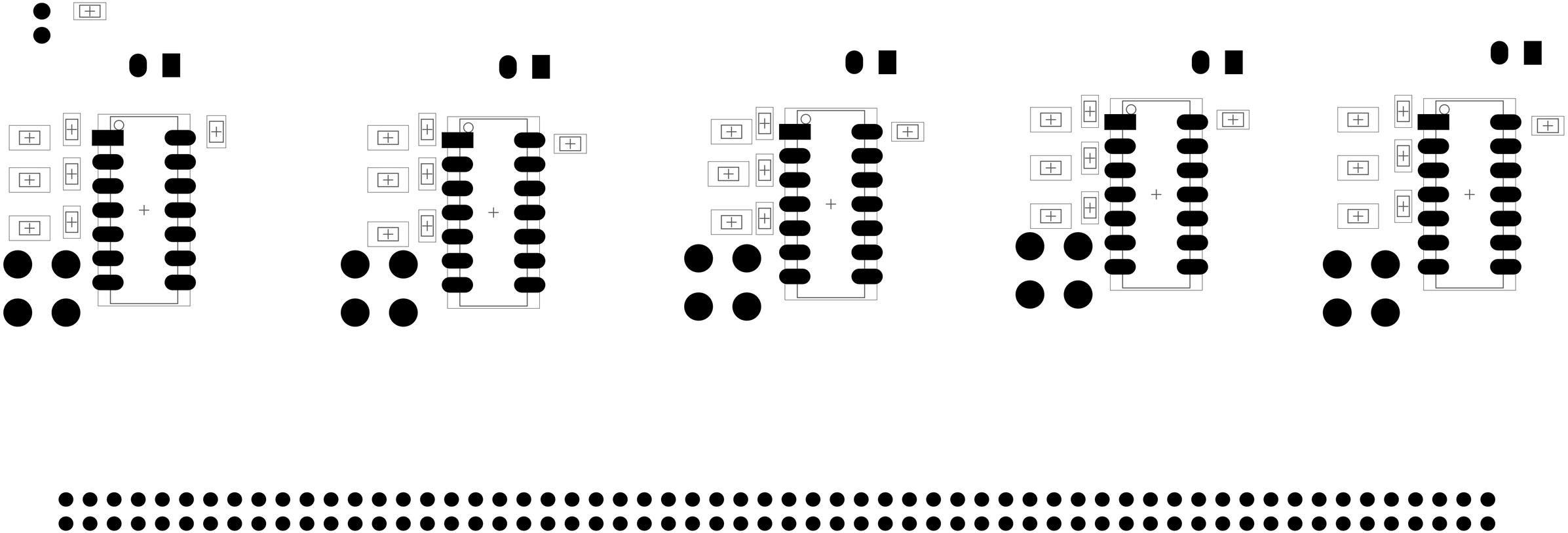
D1
RL
CON1
GND
0-4V
C4
R1
C1
R2
C2
R3
C3
74LS04
U1
SIGNAL_1
CON2
GND
0-4V
C8
R4
U3
C5
R5
C6
R6
C7
74LS04
SIGNAL_2
CON3
GND
0-4V
C12
R7
U4
C9
R8
C10
R9
C11
74LS04
SIGNAL_3
CON4
GND
0-4V
R10
U5
C13
R11
C14
R12
C15
C16
74LS04
SIGNAL_4
CON5
GND
0-4V
R13
U6
C17
R14
C18
R15
C19
C20
74LS04
SIGNAL_5
Con_1
Con_2
Con_3
Pelle Rita, 2023