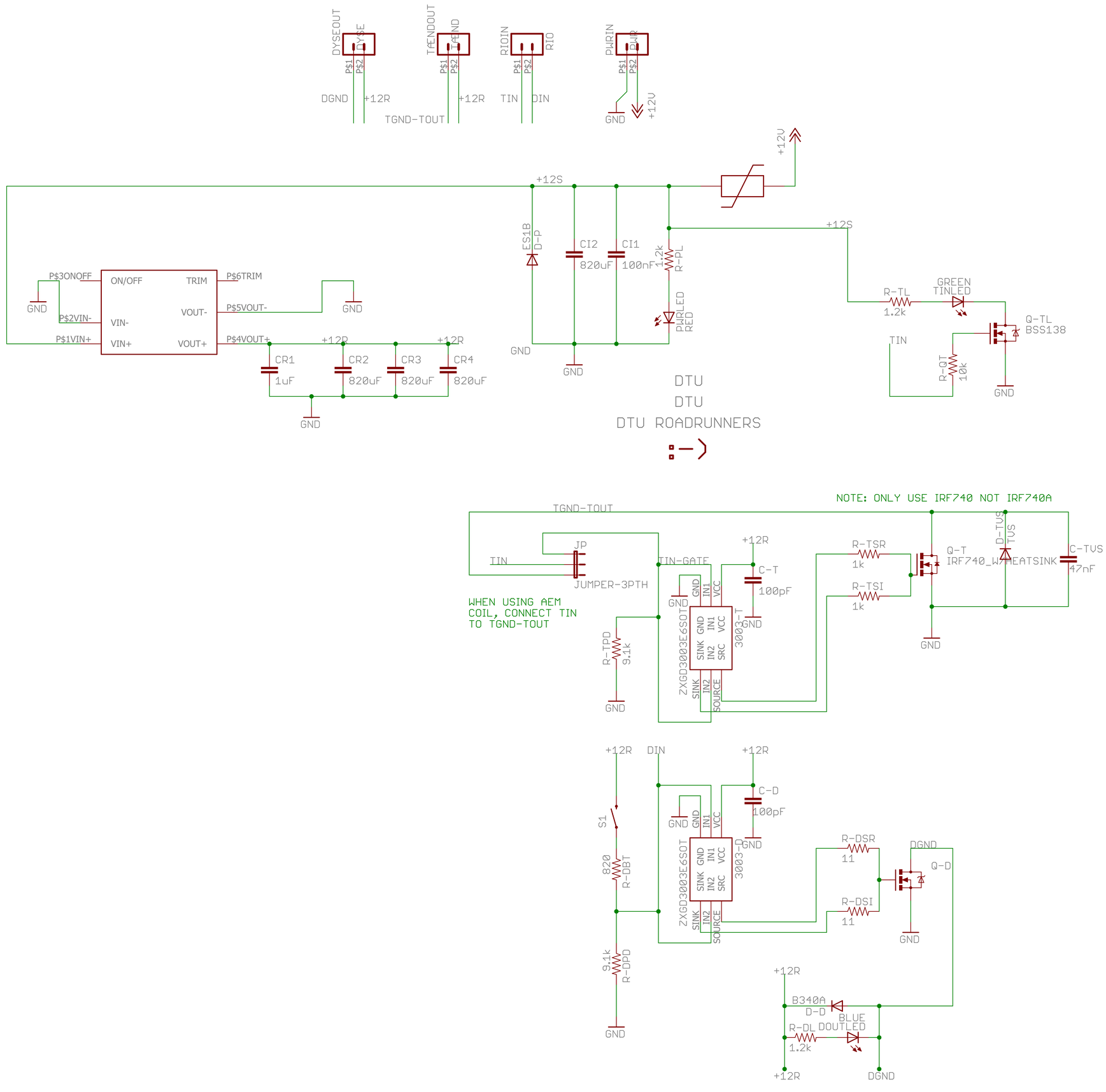
DYSEOUT
DYSE
P$1
P$2
DGND
+12R
TAENDOUT
TAEND
TGND-TOUT
RIOIN
RIO
TIN
DIN
PWRIN
PWR
GND
+12V
+12S
ES1B
D-P
CI2
820uF
CI1
100nF
1.2k
R-PL
PWRLED
RED
P$3ONOFF
ON/OFF
TRIM
P$6TRIM
P$2VIN-
VIN-
VOUT-
P$5VOUT-
P$1VIN+
VIN+
VOUT+
P$4VOUT+
CR1
1uF
CR2
820uF
CR3
820uF
CR4
820uF
R-TL
1.2k
GREEN
TINLED
Q-TL
BSS138
R-QT
10k
DTU
DTU
DTU ROADRUNNERS
NOTE: ONLY USE IRF740 NOT IRF740A
JP
JUMPER-3PTH
WHEN USING AEM
COIL, CONNECT TIN
TO TGND-TOUT
TIN-GATE
C-T
100pF
R-TPD
9.1k
ZXGD3003E6SOT
3003-T
SINK
IN2
SRC
SOURCE
IN1
VCC
R-TSR
1k
R-TSI
1k
Q-T
IRF740_W/HEATSINK
D-TVS
TVS
C-TVS
47nF
S1
820
R-DBT
9.1k
R-DPD
C-D
100pF
3003-D
R-DSR
11
R-DSI
11
Q-D
DGND
B340A
D-D
BLUE
DOUTLED
R-DL
1.2k