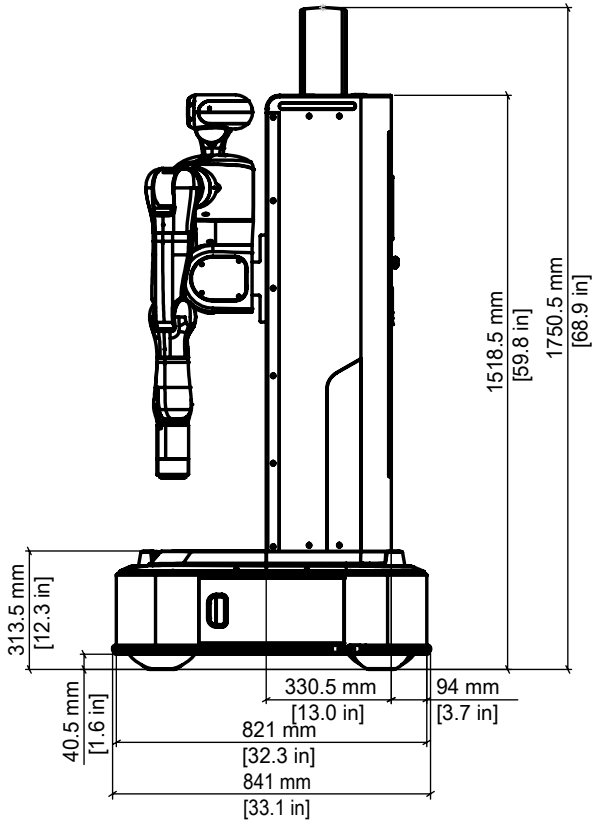
1518.5 mm
[59.8 in]
1750.5 mm
[68.9 in]
313.5 mm
[12.3 in]
40.5 mm
[1.6 in]
330.5 mm
[13.0 in]
94 mm
[3.7 in]
821 mm
[32.3 in]
841 mm
[33.1 in]

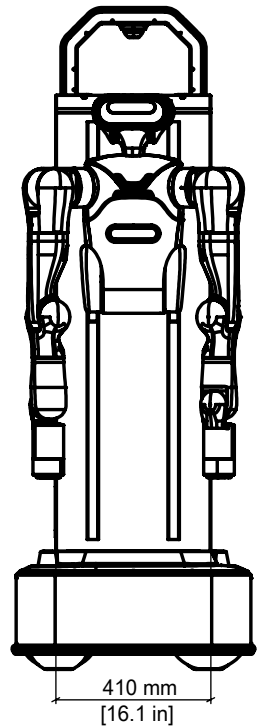
410 mm
[16.1 in]

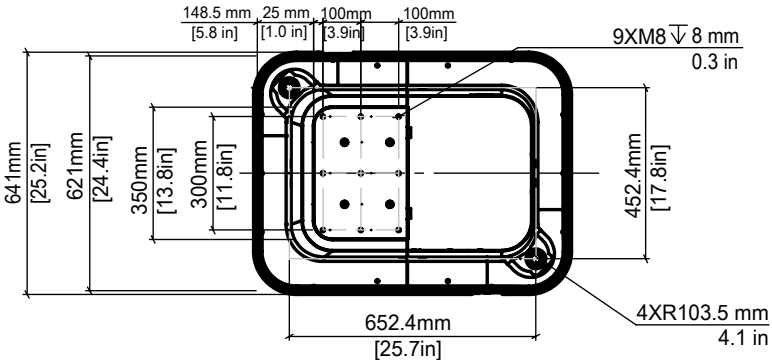
148.5 mm
[5.8 in]
25 mm
[1.0 in]
100mm
[3.9in]
100mm
[3.9in]
9XM8 ↓ 8 mm
0.3 in
641mm
[25.2in]
621mm
[24.4in]
350mm
[13.8in]
300mm
[11.8in]
452.4mm
[17.8in]
652.4mm
[25.7in]
4XR103.5 mm
4.1 in