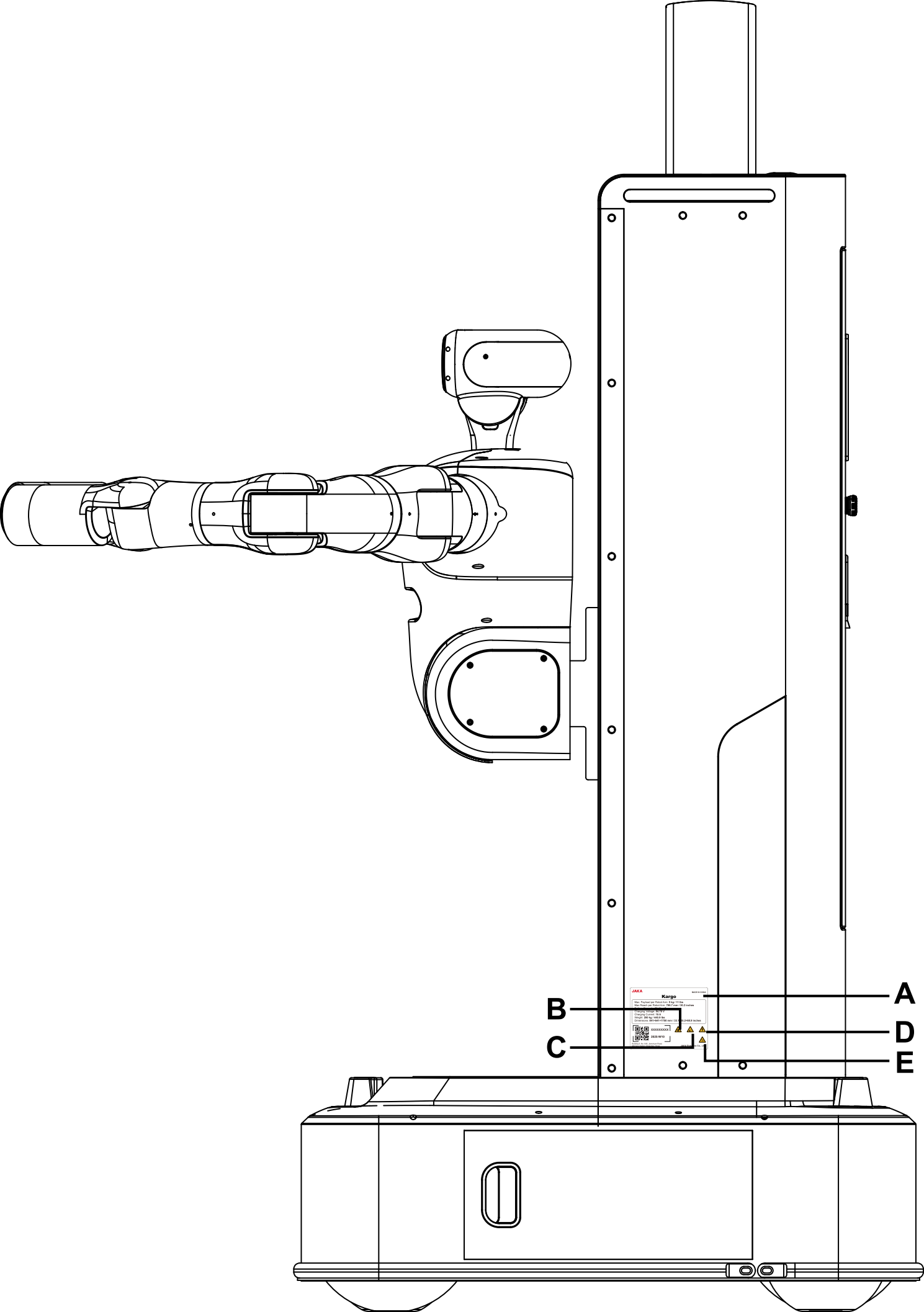
A
B
C
D
E
JAKA
Kargo
MADE IN CHINA
Max. Payload per Rated Arm: 5 kg / 11 lbs.
Max Reach per Rated Arm: 780.7 mm / 30.2 inches
Charging Voltage: 58.8V
Charging Current: 10 A
Weight: 280 kg / 440.8 lbs.
Dimension: 841×841×1750.3mm / 33.1×33.1×68.9 inches
XXXXXXXXXX
2026-WW0
Copyright © by JAKA Robotics Co., Ltd.
JAKA Robotics Co., Ltd.