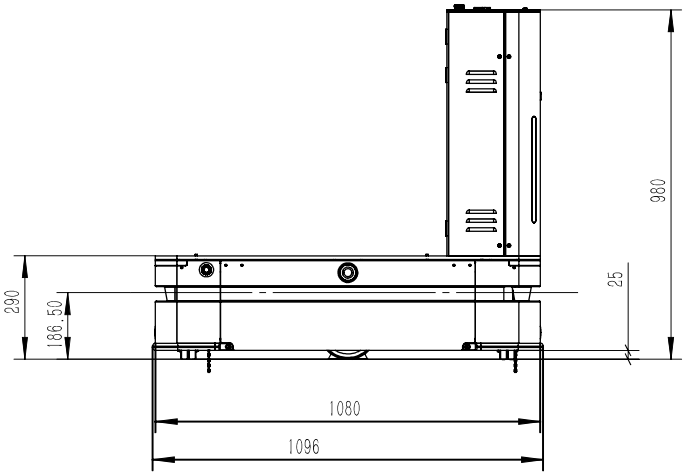
980
25
290
186.50
1080
1096

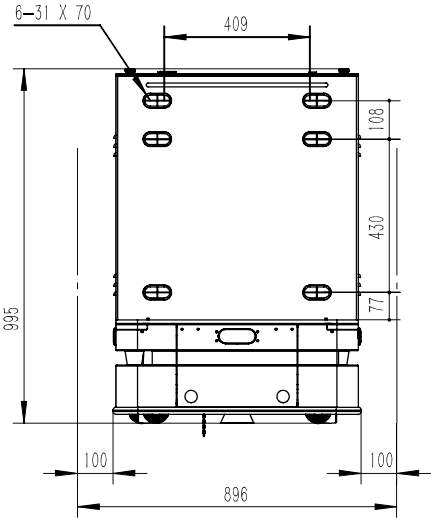
6-31 X 70
409
108
430
77
995
100
100
896

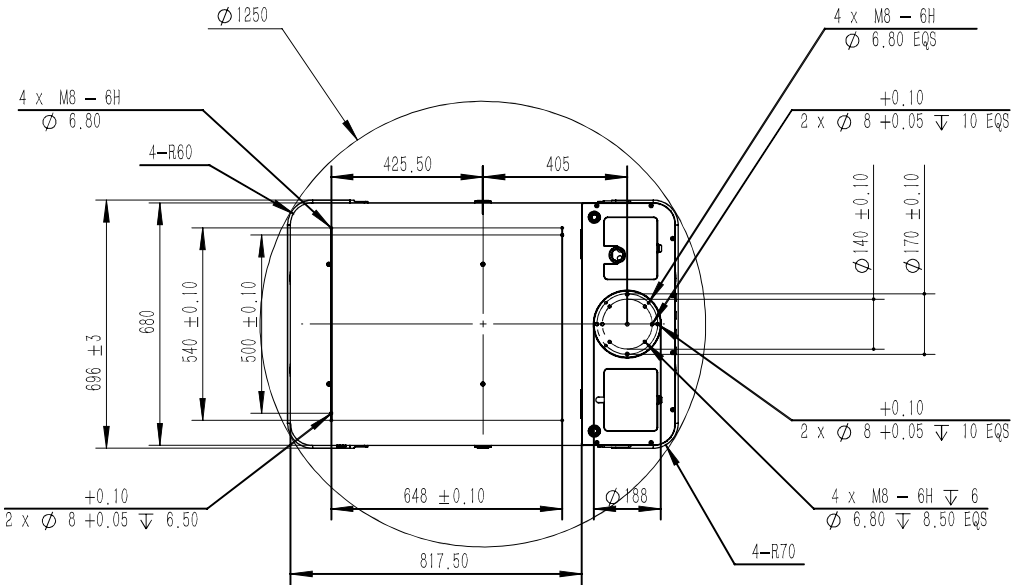
∅1250
4 x M8 - 6H
∅ 6.80
4-R60
425.50
405
4 x M8 - 6H
∅ 6.80 EQS
+0.10
2 x ∅ 8 +0.05 ↧ 10 EQS
∅140 ±0.10
∅170 ±0.10
696 ±3
680
540 ±0.10
500 ±0.10
+0.10
2 x ∅ 8 +0.05 ↧ 10 EQS
+0.10
2 x ∅ 8 +0.05 ↧ 6.50
648 ±0.10
∅188
4 x M8 - 6H ↧ 6
∅ 6.80 ↧ 8.50 EQS
4-R70
817.50

Uint: mm