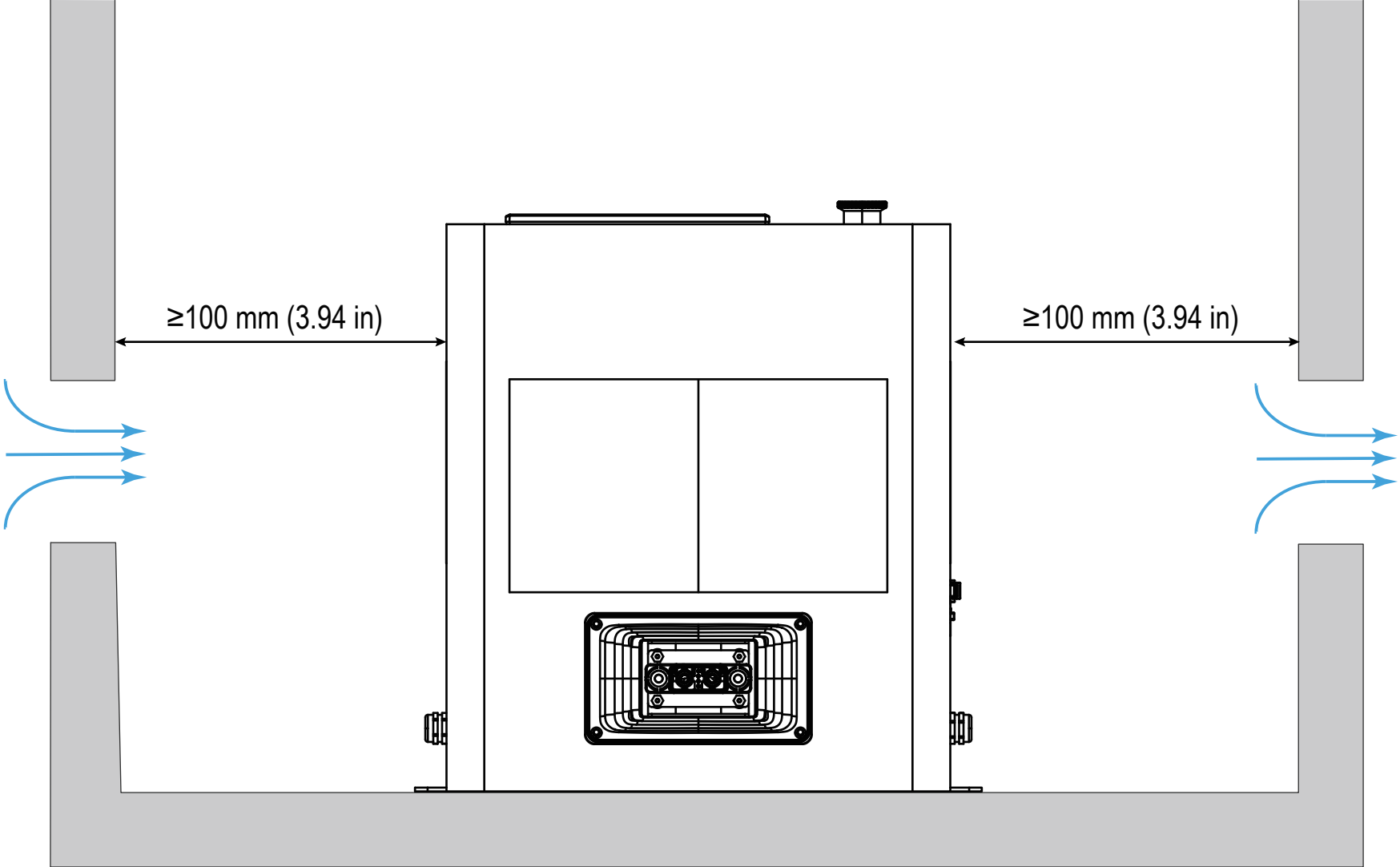
≥100 mm (3.94 in)
≥100 mm (3.94 in)