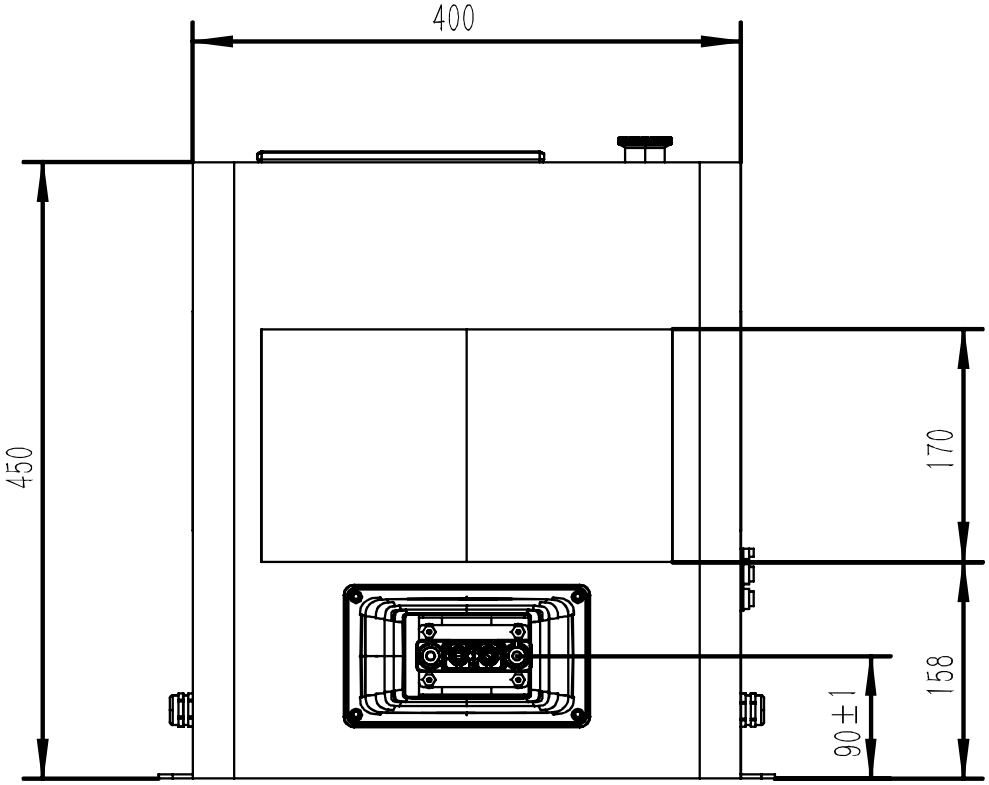
400
450
170
158
90±1

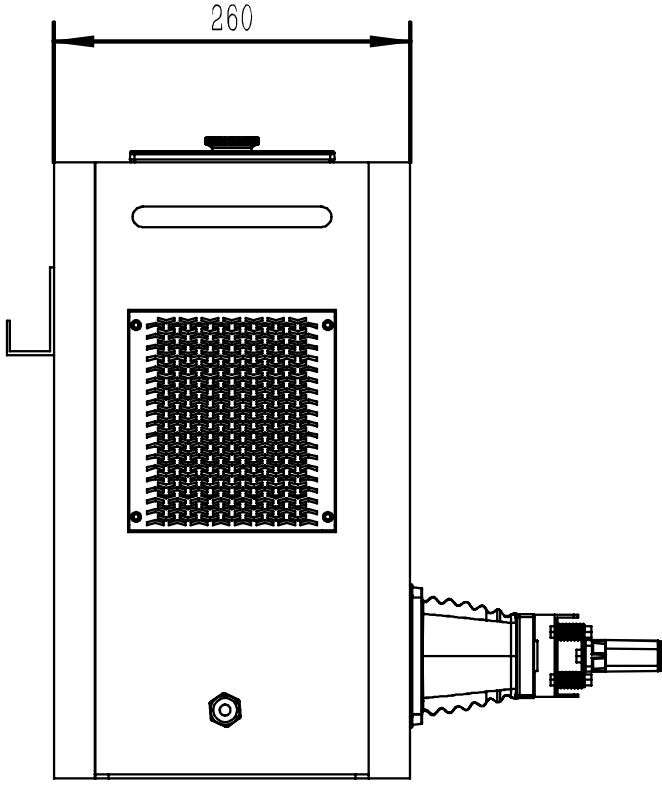
260

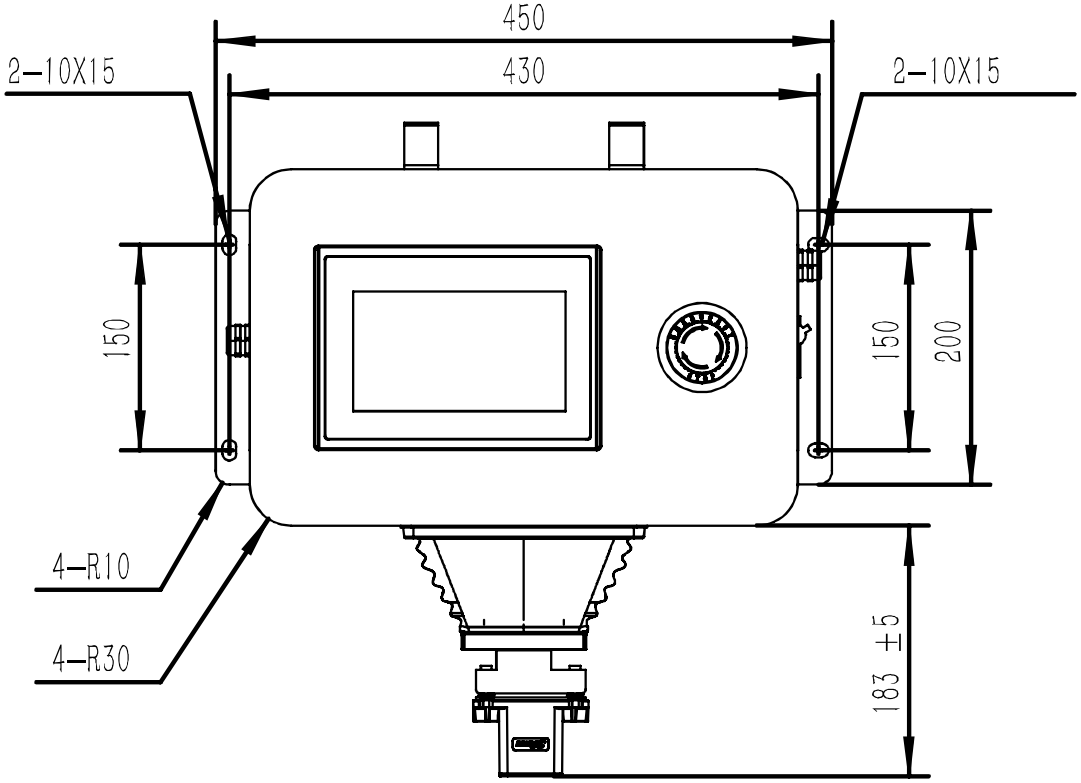
450
430
2-10X15
2-10X15
150
150
200
4-R10
4-R30
183 ±5