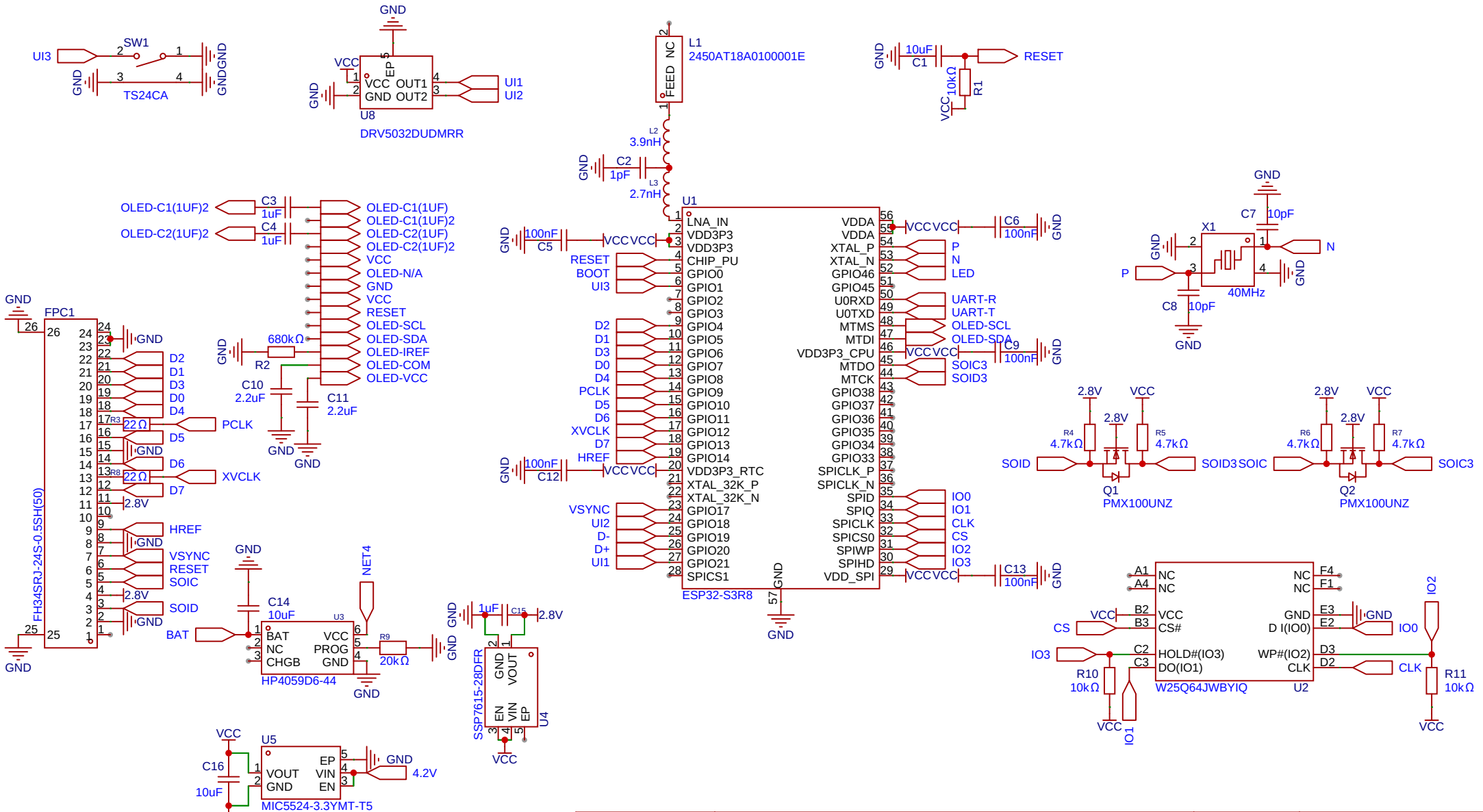

Schematic	Schematic_3	Create at	2026-03-17
		Update at	2026-03-24
Board	V1_3	Page	P1
Drawn	studypenn		
Reviewed			
		Version	Size	Page 1 Total 1
EasyEDA		V1.0	A4	EasyEDA.com