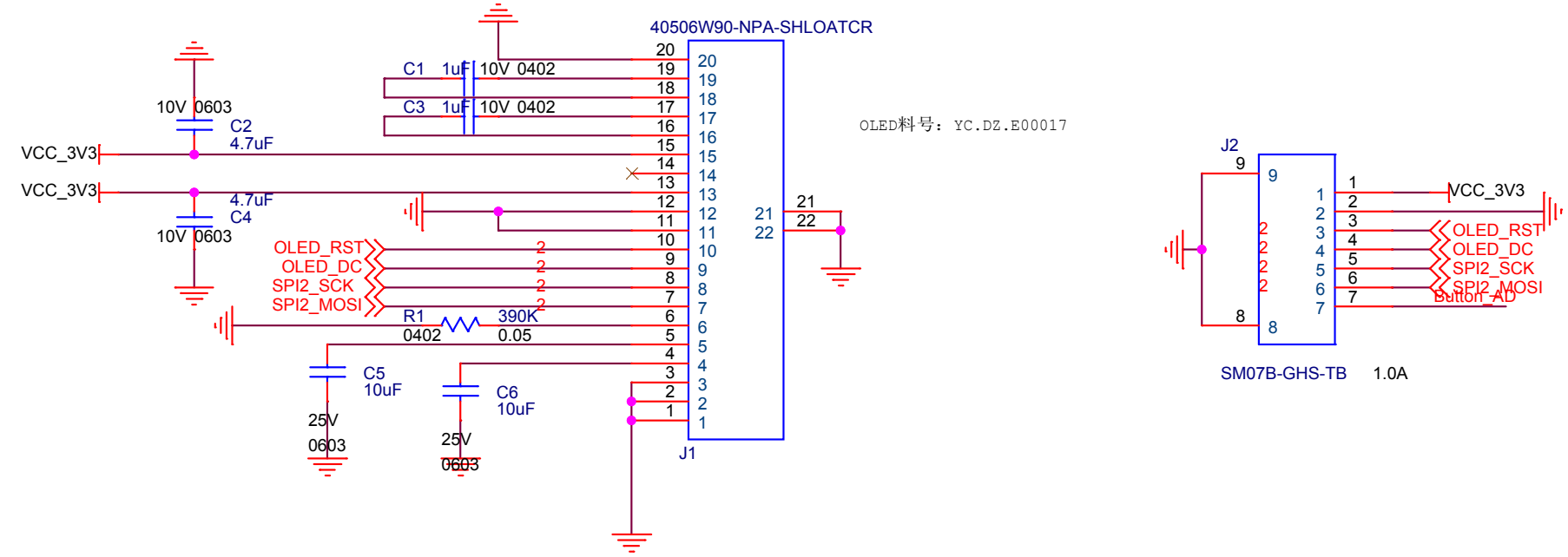

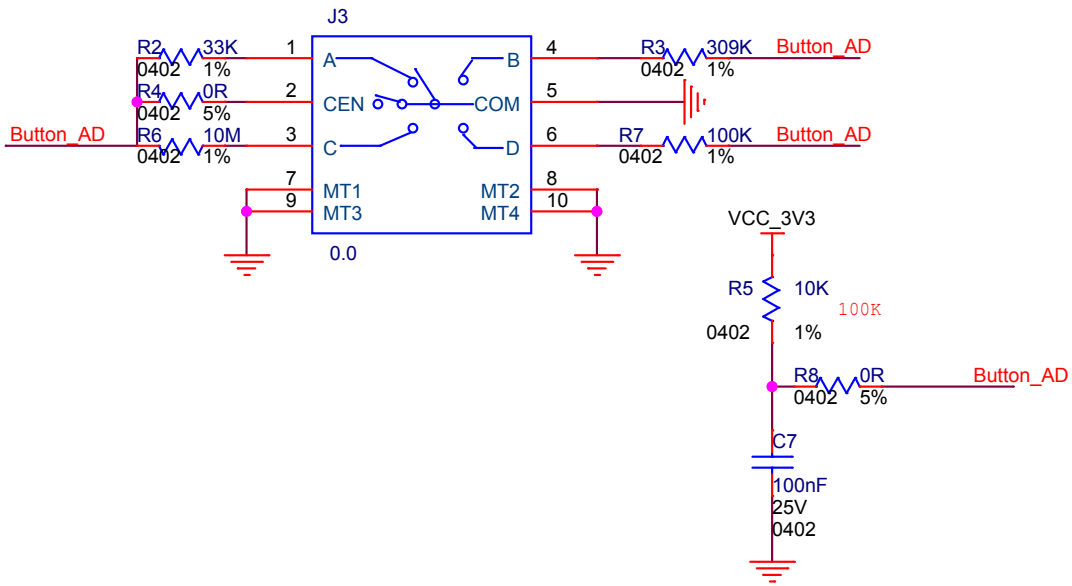

ideal voltage	actual voltage	button	resistance	AD (12b)
0V	0V	mid	0Ω	0
0.825V	0.8188V	left	33KΩ	1016
1.65V	1.65V	right	100KΩ	2048
2.475V	2.475V	up	300KΩ	3072
3.3V	3.267V	down	10MΩ	4055

Reference Voltage is 3.3V, resistance 100K

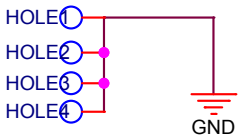

Title <Title>		
Size A	Document Number <Doc>	Rev <RevCode>
Date: Tuesday, September 19, 2017	Sheet 2 of 2	