LAB 05 REPORT

CS1050 COMPUTER ORGANIZATION AND DIGITAL DESIGN

[redacted]

Introduction

The assignment was to use D Flip Flops to build a 3-bit counter that, in response to an external input, can count both clockwise and counterclockwise. We also had to put it to the test on a development board and use simulation to make sure it worked. We were told to create a slow clock, which lowers the 100MHz clock to a 1 Hz counter, in order to slow down the clock pulse and see the changes on the board.

Excitation table

Q_t			Button	Q_{t+1}			D_2	D_1	D_0
Q_2	Q_1	Q_0		Q_2	Q_1	Q_0			
0	0	0	0	0	0	1	0	0	1
0	0	1	0	0	1	1	0	1	1
0	1	0	0	X	X	X	X	X	X
0	1	1	0	1	1	1	1	1	1
1	0	0	0	0	0	0	0	0	0
1	0	1	0	X	X	X	X	X	X
1	1	0	0	1	0	0	1	0	0
1	1	1	0	1	1	0	1	1	0
0	0	0	1	1	0	0	1	0	0
0	0	1	1	0	0	0	0	0	0
0	1	0	1	X	X	X	X	X	X
0	1	1	1	0	0	1	0	0	1
1	0	0	1	1	1	0	1	1	0
1	0	1	1	X	X	X	X	X	X
1	1	0	1	1	1	1	1	1	1
1	1	1	1	0	1	1	0	1	1

K-maps and simplified expressions for D_0, D_1, and D_2

D0

Q_2Q_1 \ Q_0B	00	01	11	10
00	1	0	0	1
01	X	X	1	1
11	0	1	1	0
10	0	0	X	X

D1

Q_2Q_1 \ Q_0B	00	01	11	10
00	0	0	0	1
01	X	X	0	1
11	0	1	1	1
10	0	1	X	X

D2

Q_2Q_1 \ Q_0B	00	01	11	10
00	0	1	0	0
01	X	X	0	1
11	1	1	0	1
10	0	1	X	X

$$D_0 = \overline{Q_2}\,\overline{B} + Q_1B$$

$$D_1 = Q_2B + Q_0\overline{B}$$

$$D_2 = Q_1\overline{B} + \overline{Q_0}B$$

D Flip-Flop

Design Source File

```
----------------------------------------------------------------------------------
-- Company: UOM CSE
-- Engineer: 220030M
-
-- Create Date: 03/06/2024 07:04:20 AM
-- Design Name:
-- Module Name: D_FF - Behavioral
-- Project Name: Lab 05
-- Target Devices:
-- Tool Versions:
-- Description:
-
-- Dependencies:
-
-- Revision:
-- Revision 0.01 - File Created
-- Additional Comments:
-
----------------------------------------------------------------------------------
use IEEE.STD_LOGIC_1164.ALL;

-- Uncomment the following library declaration if using
-- arithmetic functions with Signed or Unsigned values
--use IEEE.NUMERIC_STD.ALL;

-- Uncomment the following library declaration if instantiating
-- any Xilinx leaf cells in this code.
--library UNISIM;
--use UNISIM.VComponents.all;

entity D_FF is
    Port ( D : in STD_LOGIC;
           Res : in STD_LOGIC;
           Clk : in STD_LOGIC;
           Q : out STD_LOGIC;
           Qbar : out STD_LOGIC);
end D_FF;

architecture Behavioral of D_FF is

begin

    process (Clk) begin
        if (rising_edge(Clk)) then
            if Res = '1' then
                Q <= '0';
                Qbar <= '1';
            else
                Q<= D;
                Qbar <= not D;
            end if;
        end if;
    end process;


end Behavioral;
```

Elaborated Design Schematic

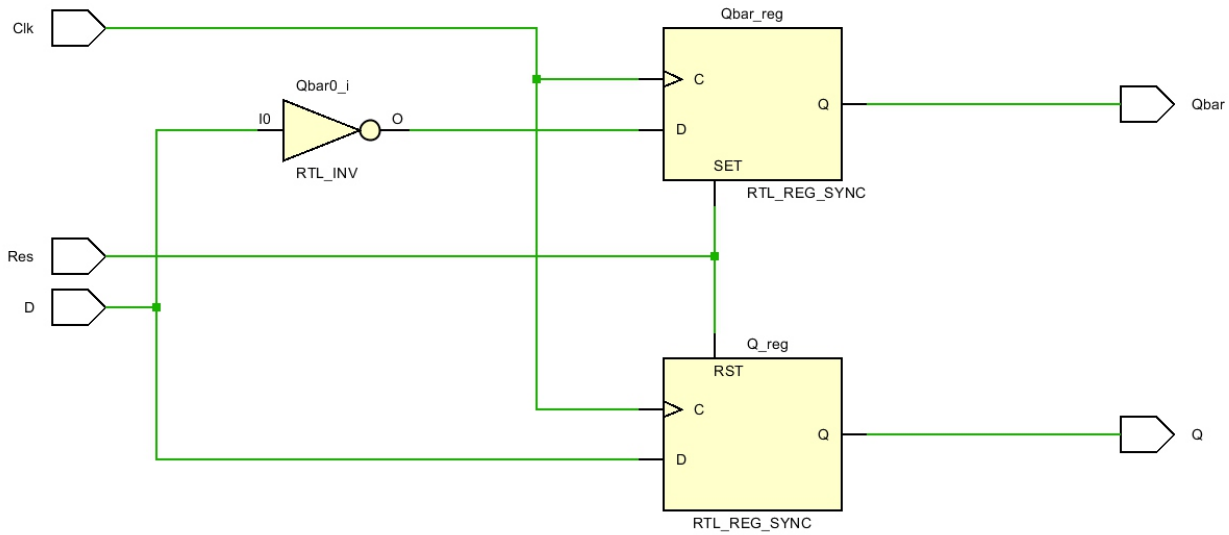

Simulation Source File

```
--------------------------------------------------------------------------------
-- Company: UOM CSE
-- Engineer: 220030M
-
-- Create Date: 03/06/2024 07:05:49 AM
-- Design Name:
-- Module Name: D_FF_Sim - Behavioral
-- Project Name: Lab 05
-- Target Devices:
-- Tool Versions:
-- Description:
-
-- Dependencies:
-
-- Revision:
-- Revision 0.01 - File Created
-- Additional Comments:
-
--------------------------------------------------------------------------------
library IEEE;
use IEEE.STD_LOGIC_1164.ALL;

-- Uncomment the following library declaration if using
-- arithmetic functions with Signed or Unsigned values
--use IEEE.NUMERIC_STD.ALL;

-- Uncomment the following library declaration if instantiating
-- any Xilinx leaf cells in this code.
--library UNISIM;
--use UNISIM.VComponents.all;

entity D_FF_Sim is

end D_FF_Sim;

architecture Behavioral of D_FF_Sim is
```

```
COMPONENT D_FF
    Port ( D : in STD_LOGIC;
           Res : in STD_LOGIC;
           Clk : in STD_LOGIC;
           Q : out STD_LOGIC;
           Qbar : out STD_LOGIC);
END COMPONENT;

    signal D, Res : STD_LOGIC ;
    signal Q, Qbar : STD_LOGIC;
    signal Clk :STD_LOGIC :='0';

begin
UUT:D_FF PORT MAP (
           D => D,
           Res => Res,
           Clk => Clk,
           Q => Q,
           Qbar => Qbar);

    process
    begin

        Clk<=NOT(Clk);
        wait for 20 ns; -- Half clock period

    end process;

    process
    begin
        D<='0';
        Res<='1';
        wait for 50 ns;
        Res<='0';
        D<='0';
        wait for 50 ns;
        D<='1';
        wait for 50 ns;
        D<='0';
        wait for 50 ns;
    end process;

end Behavioral;
```

Timing Diagram

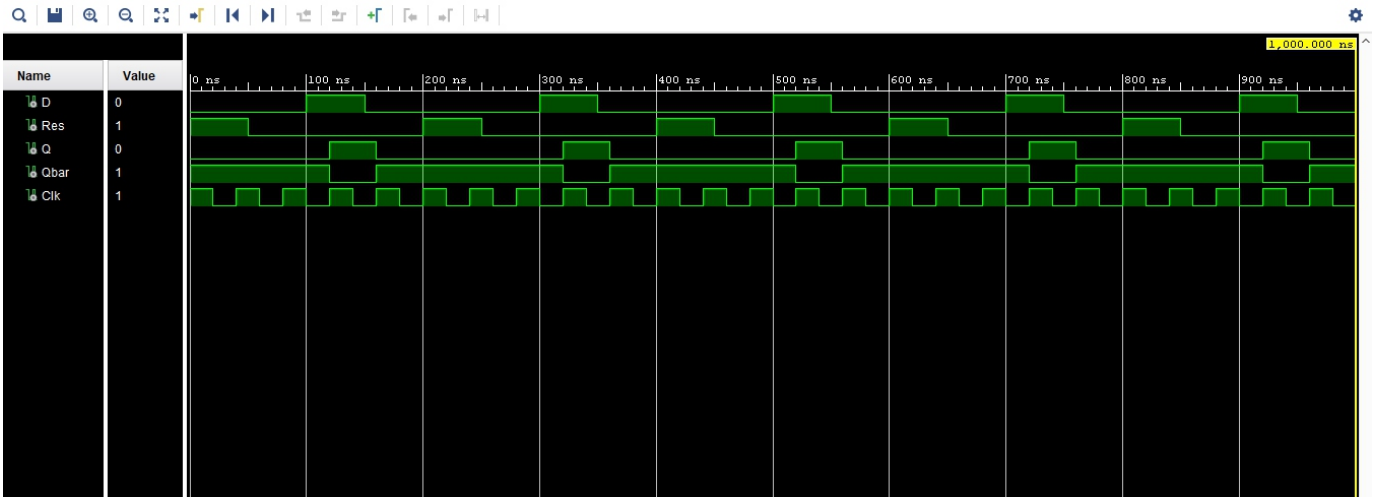

Slow Clock

Design Source File

```
----------------------------------------------------------------------------------
-- Company: UOM CSE
-- Engineer: 220030M
-
-- Create Date: 03/06/2024 07:08:09 AM
-- Design Name:
-- Module Name: Slow_Clk - Behavioral
-- Project Name: Lab 05
-- Target Devices:
-- Tool Versions:
-- Description:
-
-- Dependencies:
-
-- Revision:
-- Revision 0.01 - File Created
-- Additional Comments:
-
----------------------------------------------------------------------------------
library IEEE;
use IEEE.STD_LOGIC_1164.ALL;

-- Uncomment the following library declaration if using
-- arithmetic functions with Signed or Unsigned values
--use IEEE.NUMERIC_STD.ALL;

-- Uncomment the following library declaration if instantiating
-- any Xilinx leaf cells in this code.
--library UNISIM;
--use UNISIM.VComponents.all;

entity Slow_Clk is
    Port ( Clk_in : in STD_LOGIC;
        Clk_out : out STD_LOGIC);
end Slow_Clk;

architecture Behavioral of Slow_Clk is

SIGNAL count : integer :=1;
SIGNAL Clk_status : STD_LOGIC :='0';

begin
 process (Clk_in) begin
 if (rising_edge(Clk_in)) then
    count <= count +1 ;
    if (count = 5) then
         Clk_status <= NOT (Clk_status);
         Clk_out <= Clk_status ;
         count <= 1;
    end if;
 end if;

 end process;
end Behavioral;
```

Elaborated design schematic

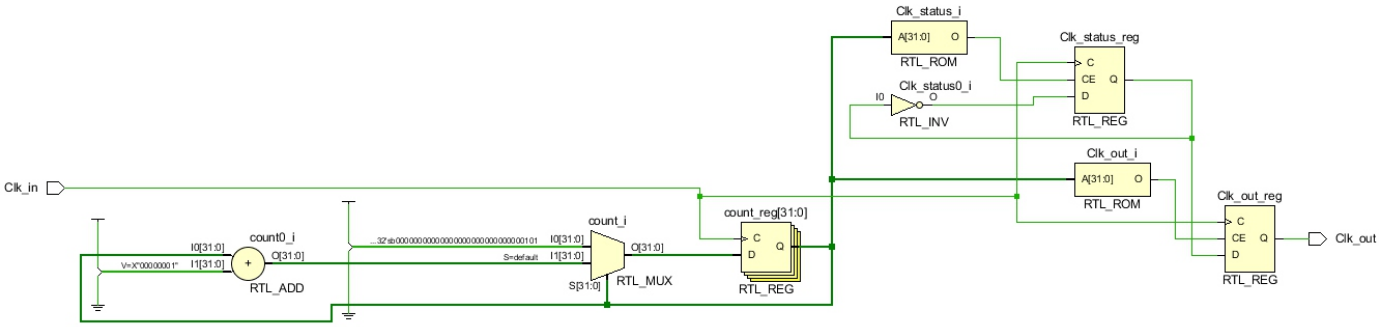

Simulation Source File

```
----------------------------------------------------------------------------------
-- Company: UOM CSE
-- Engineer: 220030M
--
-- Create Date: 03/06/2024 07:14:51 AM
-- Design Name:
-- Module Name: Slow_Clk_Sim - Behavioral
-- Project Name: Lab 05
-- Target Devices:
-- Tool Versions:
-- Description:
--
-- Dependencies:
--
-- Revision:
-- Revision 0.01 - File Created
-- Additional Comments:
--
----------------------------------------------------------------------------------
library IEEE;
use IEEE.STD_LOGIC_1164.ALL;

-- Uncomment the following library declaration if using
-- arithmetic functions with Signed or Unsigned values
--use IEEE.NUMERIC_STD.ALL;

-- Uncomment the following library declaration if instantiating
-- any Xilinx leaf cells in this code.
--library UNISIM;
--use UNISIM.VComponents.all;

entity Slow_Clk_Sim is
--  Port ( );
end Slow_Clk_Sim;

architecture Behavioral of Slow_Clk_Sim is
COMPONENT Slow_Clk
    Port ( Clk_in : in STD_LOGIC;
           Clk_out : out STD_LOGIC);
END COMPONENT;

SIGNAL clk_out : std_logic;
SIGNAL clk_in : std_logic := '0';
```

```
begin
    UUT : Slow_Clk PORT MAP(
        Clk_in => clk_in,
        Clk_out => clk_out
    );

    process begin
        for i in 0 to 100000000  loop
            clk_in <= not clk_in;
            wait for 10ns;
        end loop;
        wait;
    end process;

end Behavioral;
```

Timing diagram

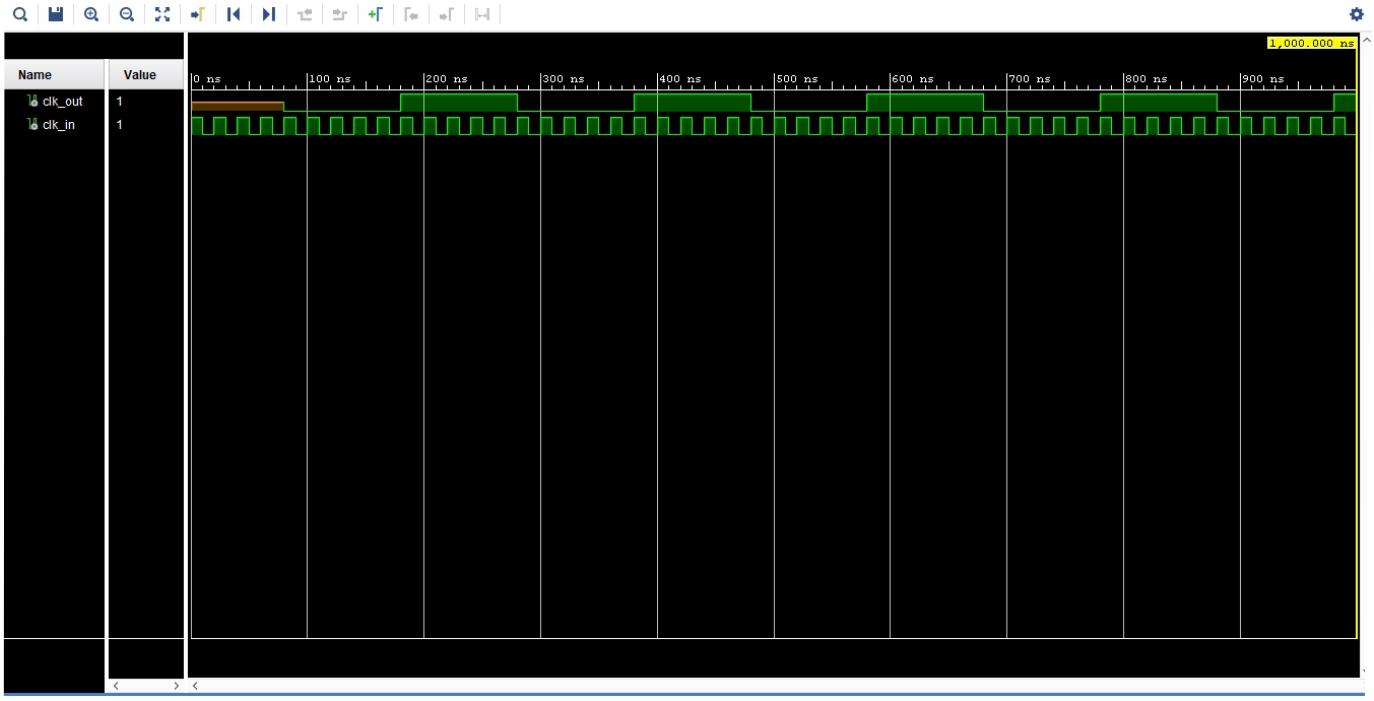

Counter

Design Source File

```
----------------------------------------------------------------------------------
-- Company: UOM CSE
-- Engineer: 220030M
--
-- Create Date: 03/06/2024 07:23:42 AM
-- Design Name:
-- Module Name: Counter - Behavioral
-- Project Name: Lab 06
-- Target Devices:
-- Tool Versions:
-- Description:
--
-- Dependencies:
--
-- Revision:
-- Revision 0.01 - File Created
-- Additional Comments:
-
```

```
--------------------------------------------------------------------------------
library IEEE;
use IEEE.STD_LOGIC_1164.ALL;
-- Uncomment the following library declaration if using
-- arithmetic functions with Signed or Unsigned values
--use IEEE.NUMERIC_STD.ALL;
-- Uncomment the following library declaration if instantiating
-- any Xilinx leaf cells in this code.
--library UNISIM;
--use UNISIM.VComponents.all;
entity Counter is
    Port ( Dir : in STD_LOGIC;
           Res : in STD_LOGIC;
           Clk : in STD_LOGIC;
           Q : out STD_LOGIC_VECTOR (2 downto 0));
end Counter;
architecture Behavioral of Counter is
COMPONENT D_FF
    PORT ( D : in STD_LOGIC;
           Res : in STD_LOGIC;
           Clk : in STD_LOGIC;
           Q : out STD_LOGIC;
           Qbar : out STD_LOGIC);
END COMPONENT;

COMPONENT Slow_Clk
    Port ( Clk_in : in STD_LOGIC;
           Clk_out : out STD_LOGIC);
END COMPONENT;
signal D0, D1, D2 : std_logic;
signal Q0, Q1, Q2 : std_logic;
signal Clk_slow : std_logic;

begin
    Slow_Clk0 : Slow_Clk
    port map ( Clk_in => Clk,
               Clk_out => Clk_slow);

    D0 <= ((not Q2) and (not Dir)) or (Q1 and Dir);
    D1 <= ( Q2 and Dir ) or ( Q0 and (not Dir) );
    D2 <= ( Q1 and (not Dir) ) or ( (not Q0) and Dir );

    D_FF0 : D_FF
    port map ( D => D0,
               Res => Res,
               Clk => Clk_slow,
               Q => Q0);
    D_FF1 : D_FF
    port map ( D => D1,
               Res => Res,
               Clk => Clk_slow,
               Q => Q1);
    D_FF2 : D_FF
    port map ( D => D2,
               Res => Res,
               Clk => Clk_slow,
               Q => Q2);
    Q(0) <= Q0;
    Q(1) <= Q1;
    Q(2) <= Q2;

end Behavioral;
```

Elaborated Design Schematic

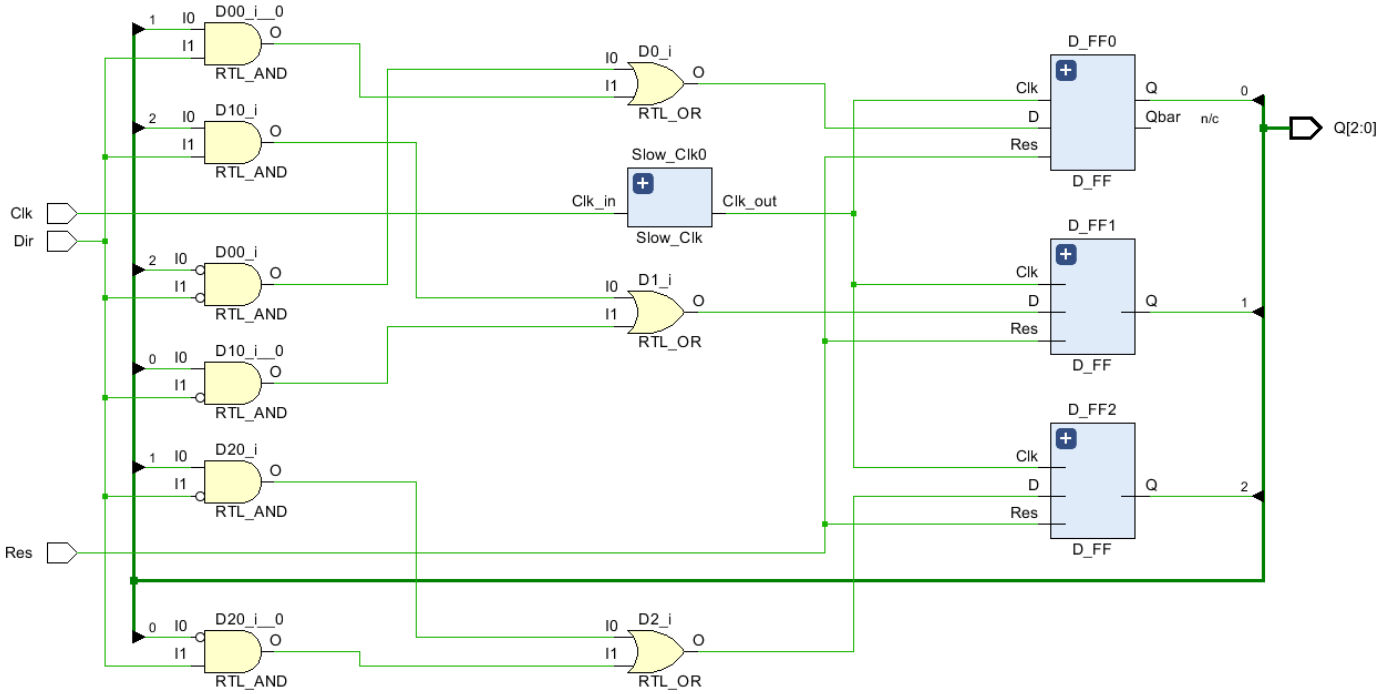

Simulation Source File

```
----------------------------------------------------------------------------------
-- Company: UOM CSE
-- Engineer: 220030M
--
-- Create Date: 03/06/2024 07:26:56 AM
-- Design Name:
-- Module Name: Counter_sim - Behavioral
-- Project Name: Lab 05
-- Target Devices:
-- Tool Versions:
-- Description:
--
-- Dependencies:
--
-- Revision:
-- Revision 0.01 - File Created
-- Additional Comments:
--
----------------------------------------------------------------------------------
library IEEE;
use IEEE.STD_LOGIC_1164.ALL;

-- Uncomment the following library declaration if using
-- arithmetic functions with Signed or Unsigned values
--use IEEE.NUMERIC_STD.ALL;

-- Uncomment the following library declaration if instantiating
-- any Xilinx leaf cells in this code.
--library UNISIM;
--use UNISIM.VComponents.all;

entity Counter_Sim is
--  Port ( );
end Counter_Sim;
```

```
architecture Behavioral of Counter_Sim is
COMPONENT Counter
   Port ( Dir : in STD_LOGIC;
          Res : in STD_LOGIC;
          Clk : in STD_LOGIC;
          Q : out STD_LOGIC_VECTOR (2 downto 0));
END COMPONENT;

SIGNAL dir,res : std_logic;
SIGNAL clk : std_logic := '0';
SIGNAL q : std_logic_vector(2 downto 0);

begin
UUT : Counter PORT MAP(
        Dir => dir,
        Res => res,
        Clk => clk,
        Q => q
    );

    process begin
        res <= '1';
        wait for 100ns;
        res <= '0';
        dir <= '0';
        wait;
    end process;

    process begin
        clk <= (not clk);
        wait for 5ns;
    end process;

end Behavioral;
```

Timing diagram

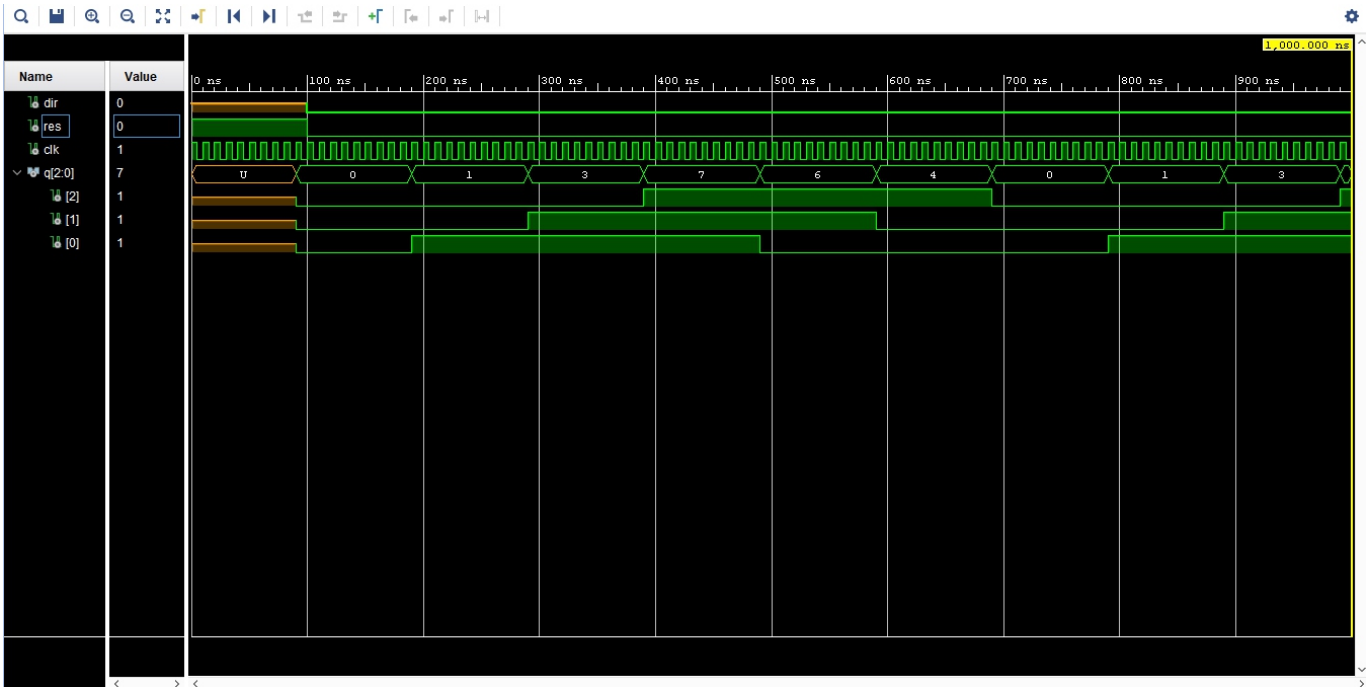

Implemented Design Schematic

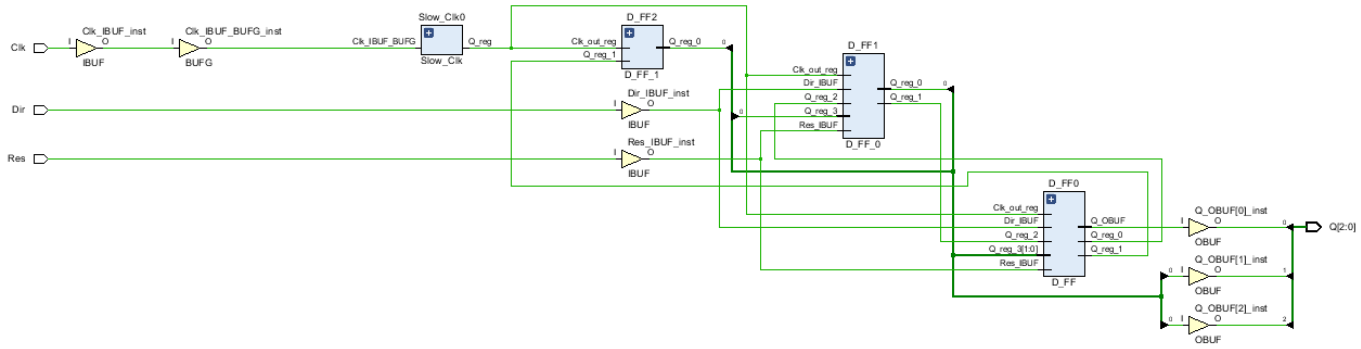

Timing Diagram

```
 names in the project

## Clock signal
set_property PACKAGE_PIN W5 [get_ports Clk]
   set_property IOSTANDARD LVCMOS33 [get_ports Clk]
   create_clock -add -name sys_clk_pin -period 10.00 -waveform {0 5} [get_ports Clk]

## Switches
set_property PACKAGE_PIN V17 [get_ports {Dir}]
   set_property IOSTANDARD LVCMOS33 [get_ports {Dir}]

## LEDs
set_property PACKAGE_PIN U16 [get_ports {Q0}]
   set_property IOSTANDARD LVCMOS33 [get_ports {Q0}]
set_property PACKAGE_PIN E19 [get_ports {Q1}]
   set_property IOSTANDARD LVCMOS33 [get_ports {Q1}]
set_property PACKAGE_PIN U19 [get_ports {Q2}]
   set_property IOSTANDARD LVCMOS33 [get_ports {Q2}]

##Buttons
set_property PACKAGE_PIN U18 [get_ports Res]
   set_property IOSTANDARD LVCMOS33 [get_ports Res]
```

Conclusion

By enabling the development and application of a 3-bit counter with external input, the lab demonstrated the importance of flip-flops and digital logic gates in obtaining the required functionality. The addition of an external input button to regulate the counting direction makes the counter more adaptable and useful in various contexts.