3 Axis Milling Shield

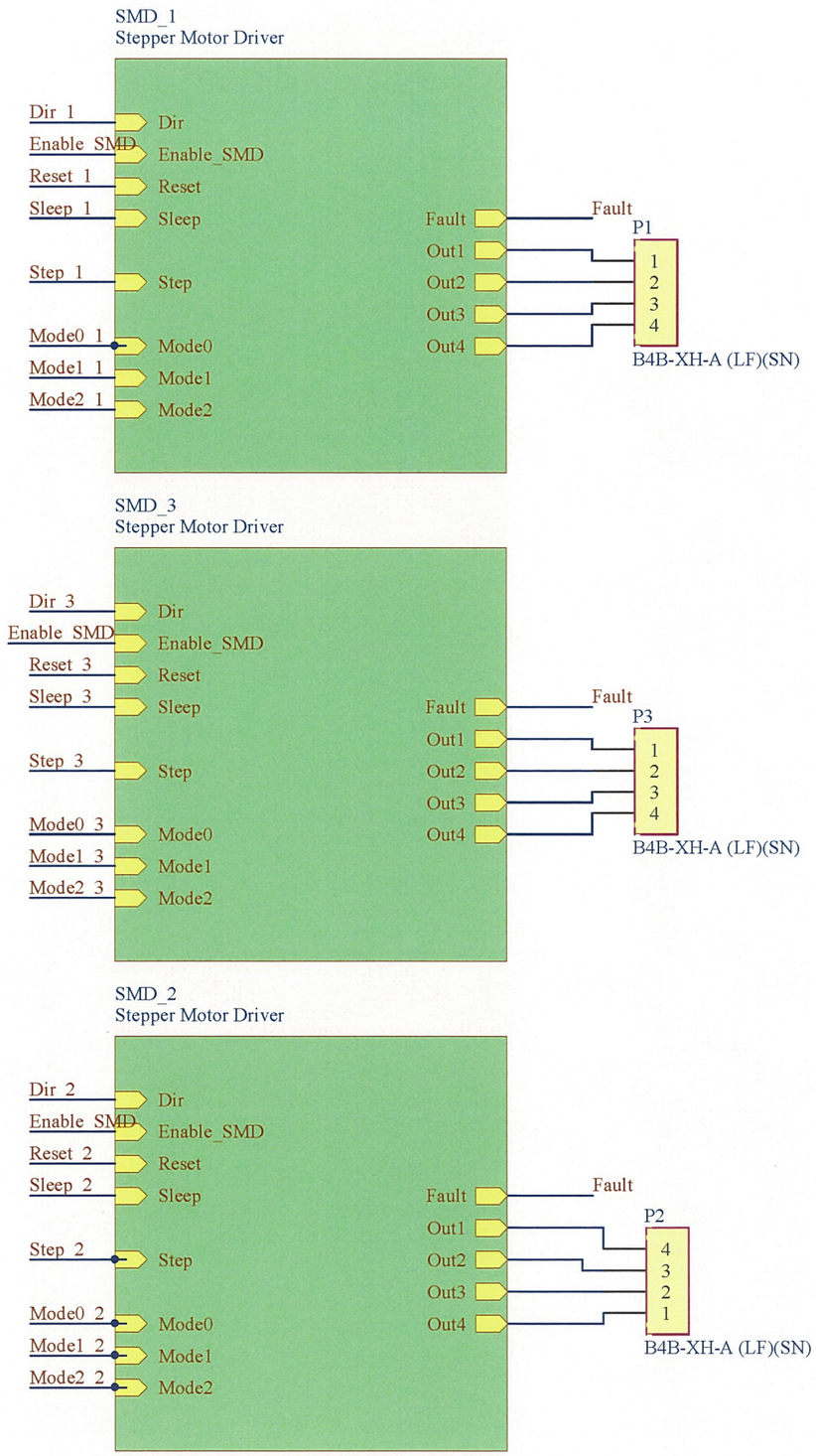

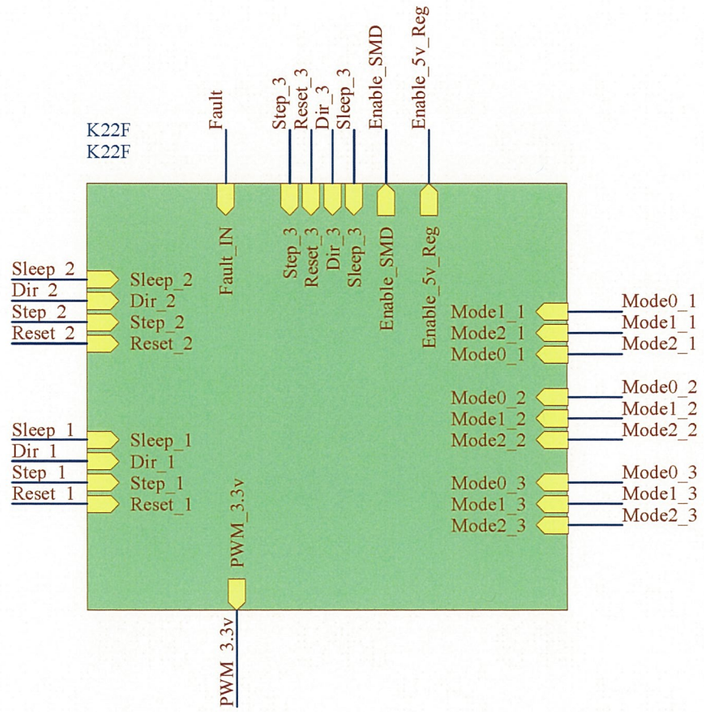

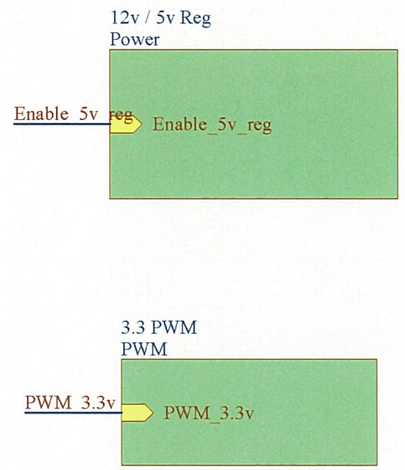

Messy

*	Drawn by: Levi Smith, Peng Cheng, Fuz[illegible] Liu, Kian Bender	JAMES COOK UNIVERSITY AUSTRALIA
Sheet * of *		
Date: 16/09/2019 Time: 5:05:40 PM	Revision: *	
File: 3 axis sheld.SchDoc		

K22F Header

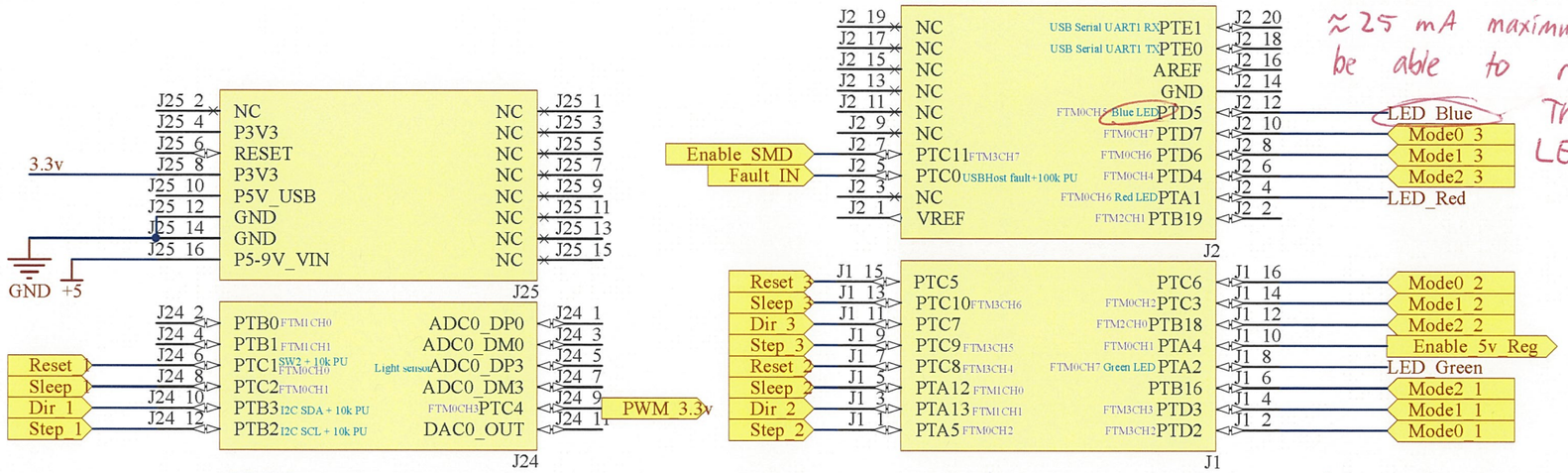

Your LEDs are in parallel with the LEDs on the FRDM board. Remember that the MCU can output ≈25 mA maximum, so you won't be able to run these as designed. The current from 2 LEDs will exceed 25 mA.

Can use the same mode on all channels if you need to save pins.

RGB LED

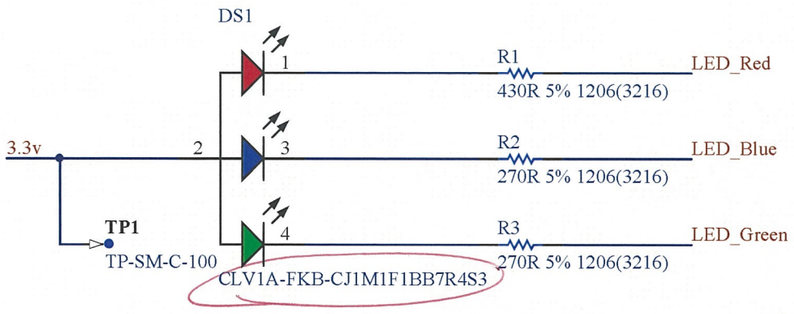

This part is no longer manufactured and the supplier in your BOM has none in stock. Choose something else.

Levi, Peng, Fuzhen, Kim

Title			
Size A4	Number		Revision
Date:	16/09/2019	Sheet	of
File:	C:\Users\..\K22F.SchDoc	Drawn By:	

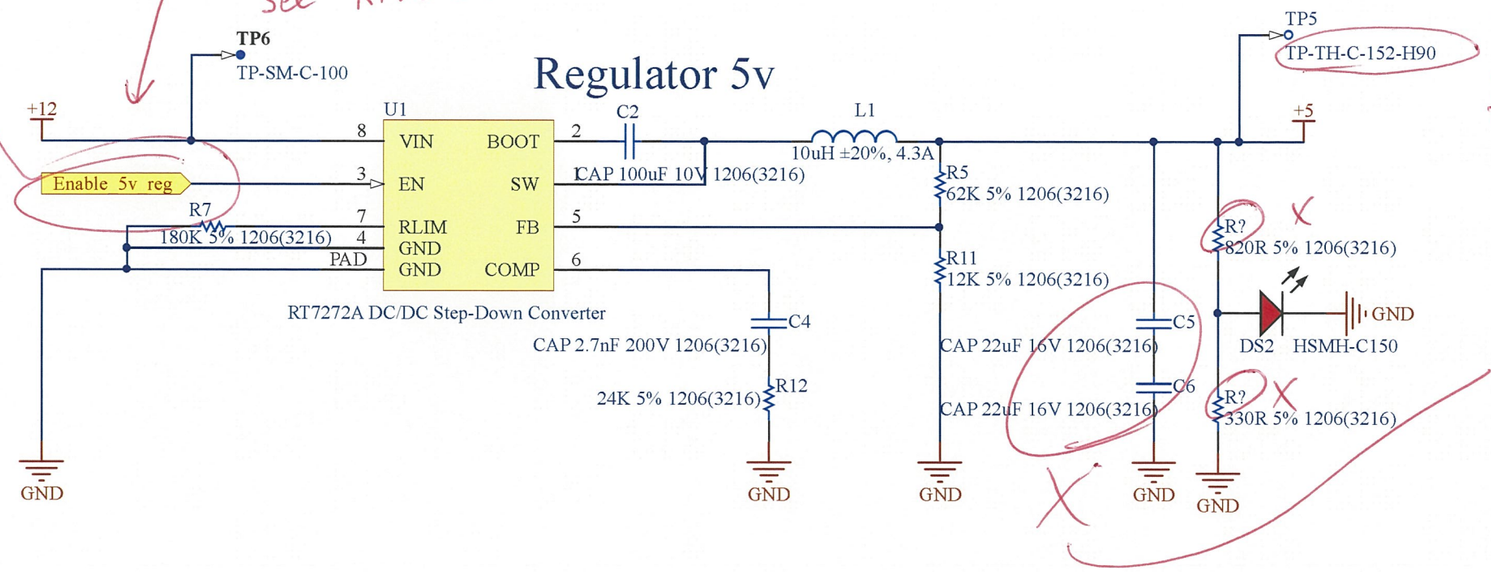

This signal comes from the MCU. How can the MCU produce an enable signal if it doesn't have power yet?

Just tie EN to +12.

Missing Vin caps. See RT7272A datasheet pg 6.

This is a different test point design to the others. Is this intentional?

Should be in parallel, not series.

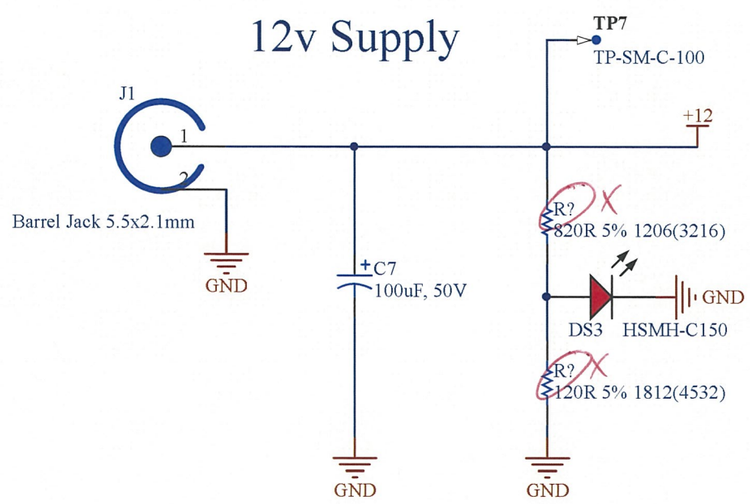

Don't use a voltage divider for indicator LEDs. Current is wasted through the low side resistor. Just use a single resistor: Calculate the resistor size using V=IR based upon the required voltage drop and LED forward current.

Title		
Size A4	Number	Revision
Date: 16/09/2019		Sheet of
File: C:\Users\..\Power.SchDoc		Drawn By:

Your names

DC Motor PWM

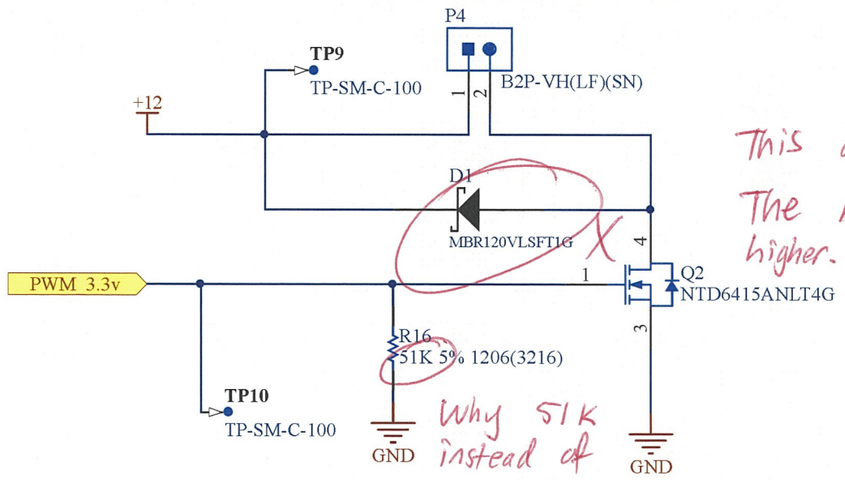

This diode is rated for 1 A, 20 V.
The motor stall current (see task sheet) is higher. Also the motor supply is 12–24 V.

Why 51K instead of 50K?
We won't have 51K in stock.

Title		
Size A4	Number	Revision
Date: 16/09/2019		Sheet of
File: C:\Users\..\PWM.SchDoc		Drawn By:

Stepper

DRV8825 Steper Motor Driver

Missing cap. See DRV8825 datasheet page 18.

Missing decoupling caps on the motor supply rail.

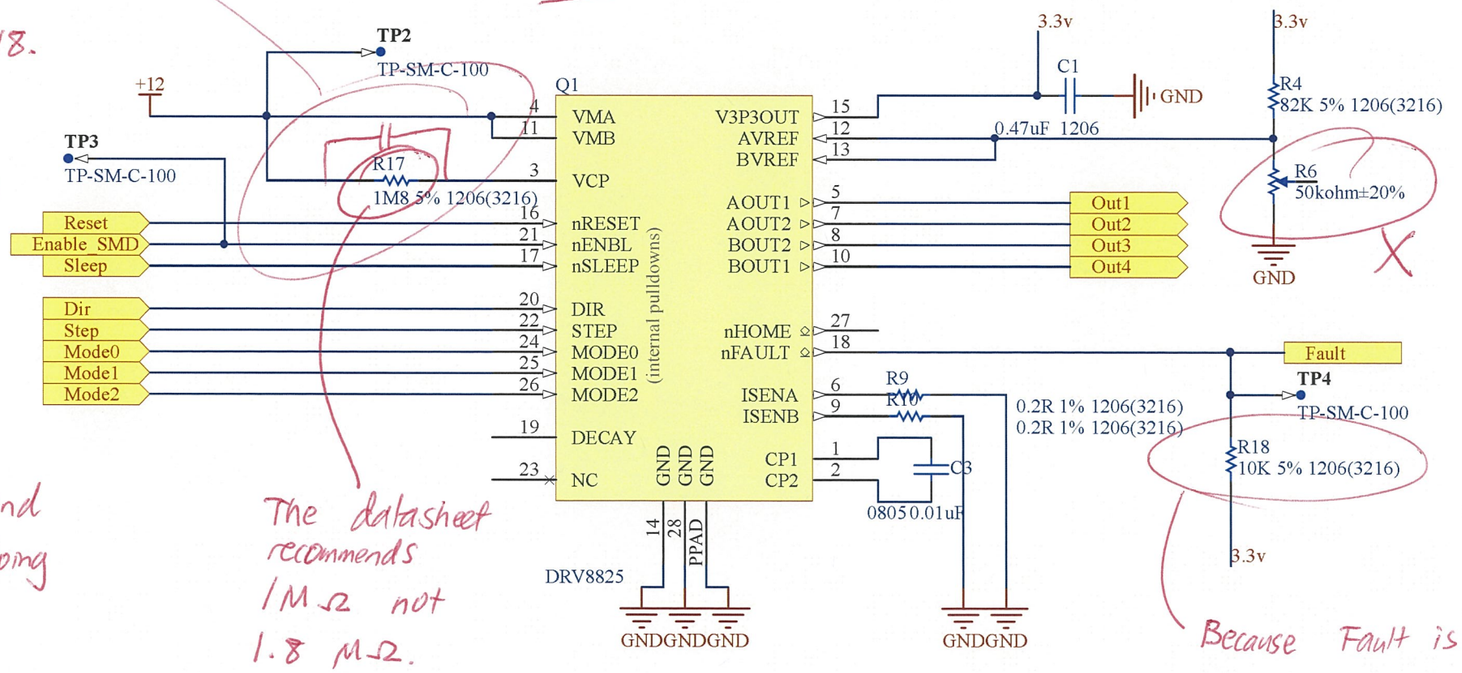

Trimpots have 3 pins.

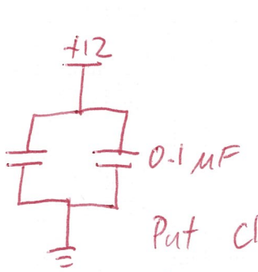

Put close to VMA and VMB pins when doing the PCB layout.

The datasheet recommends 1MΩ not 1.8 MΩ.

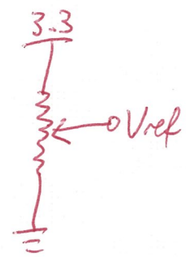

Because Fault is connected to the other stepper drivers' Fault signals, you have 3 x 10k in parallel. This pullup is stronger than you think.

Title	Your names here.	
Size A4	Number	Revision
Date: 16/09/2019		Sheet of
File: C:\Users\...\Stepper Motor Driver.SchDoc		Drawn By:

Levi, Peng, Fuzhen, Kim

Comment	Description	Designator	Footprint	LibRef	Source	element14 order code	DigiKey order code	Mouser order code	Quantity	Unit cost	Total cost
NXP FRDM-K22F		*1	FRDM-K22F	NXP FRDM-K22F	JCU Store				1		0.00
1206C474K5RA(	Chip Capacitor, 470 nF, +/- 10%, 50 V, -55 to 125 degC, 1206 (3216 Metric), RoHS, Tape and Reel	C1_SMD_1, C1_SMD_2, C1_SMD_3	CAPC3216X100X50LL20T25	CMP-2000-06016-1	JCU Store				3		0.00
CAP 100uF 10V	CAP 100uF 10V ±20% 1206 (3216 Metric) Thickness 1.9mm SMD	C2	CAPC1206(3216)190_L	CMP-1037-05006-1	JCU Store				1		0.00
C0805C103K5RA	Chip Capacitor, 0.01 uF, +/- 10%, 50 V, -55 to 125 degC, 0805 (2012 Metric), RoHS, Tape and Reel	C3_SMD_1, C3_SMD_2, C3_SMD_3	CAPC2013X88X50LL20T25	CMP-2000-05989-1	JCU Store				3		0.00
CAP 2.7nF 200V	CAP 2.7nF 200V ±5% 1206 (3216 Metric) Thickness 1mm SMD	C4	CAPC1206(3216)100_L	CMP-1037-02898-1	JCU Store				1		0.00
CAP 22uF 16V 1	CAP 22uF 16V ±10% 1206 (3216 Metric) Thickness 1.9mm SMD	C5, C6	CAPC1206(3216)190_N	CMP-1037-04992-1	JCU Store				2		0.00
100uF, 50V	Electrolytic Capacitor, 100 µF, 50 V, ± 20%, Radial Leaded, 8 mm	C7	Capacitor radial 8mm	Cap 100uF, 50V, THT radial	JCU Store				1		0.00
MBR120VLSFT1	MBR120VLSFT1G Schottky Rectifier, 20V, 1A	D1	SODFL360X100-2N	Diode MBR120VLSFT1G	JCU Store				1		0.00
CLV1A-FKB-CJ1N	Cree(R) PLCC Full-Color LED, 3 V, 20 mA, -40 to 100 degC, 4-Pin SMD, RoHS, Tape and Reel	DS1	CREE-CLV1A-FKB_V	CMP-2000-06111-1	DigiKey		CLV1A-FKB-CJ1M1F1BB7R4S3CT-ND		1	1.01	1.01
HSMH-C150	LED Uni-Color Red, 65 mW, 25 mA, -40 to 85 degC, 2-Pin SMD, RoHS, Tape and Reel	DS2, DS3	AVAG-HSMX-C150_V	CMP-2000-06426-1	DigiKey		516-1439-1-ND		2	0.66	1.32
Barrel Jack 5.5x2	GCT DCJ200-10-A-K1-K	J1	Barrel Jack 2.1x5.5mm THT	Barrel Jack 5.5x2.1mm	Mouser			992-CON-SOCJ-2155	1	1.53	1.53
10uH ±20%, 4.3	Inductor SMD - 10uH, 4.3A, ±20%	L1	Inductor SMD VLF10045 seri	Inductor SMD VLF10045T-100M4R3 10uH	JCU Store				1		0.00
B4B-XH-A (LF)(S	Wire-to-board connector, vertical, 2.5mm, 4 contacts	P1, P2, P3	B4B-XH-A (LF)(SN)	B4B-XH-A (LF)(SN) Wire-to-board connector	Element14	1516278			3		0.00
B2P-VH(LF)(SN)	Male Header, Pitch 3.96 mm, 1 x 2 Position, Height 10.9 mm, Tail Length 3.7 mm, -25 to 85 degC, RoHS, Bulk	P4	JST-B2P-VH(LF)(SN)_V	CMP-1755-00002-1	JCU Store				1		0.00
DRV8825	TI DRV8825 Stepper Motor Controller IC	Q1_SMD_1, Q1_SMD_2, Q1_SMD_3	DRV8825 HTSSOP	Stepper motor driver DRV8825	Element14	2769196			3	6.14	18.42
NTD6415ANLT4	N-Channel Power MOSFET, 100 V, 23 A, 56 mOhm, 3-Pin DPAK, Pb-Free, Tape and Reel	Q2	ONSC-DPAK-3-369AA-01_V	CMP-1058-00352-1	JCU Store				1		0.00
430R 5% 1206(3	430R 0.25W 5% 1206 (3216 Metric) SMD	R1	RESC1206(3216)_L	CMP-1014-00065-1	JCU Store				1		0.00
270R 5% 1206(3	270R 0.25W 5% 1206 (3216 Metric) SMD	R2, R3	RESC1206(3216)_N	CMP-1014-00060-1	JCU Store				2		0.00
82K 5% 1206(32	82K 0.25W 5% 1206 (3216 Metric) SMD	R4_SMD_1, R4_SMD_2, R4_SMD_3	RESC1206(3216)_N	CMP-1014-00120-1	JCU Store				3		0.00
62K 5% 1206(32	62K 0.25W 5% 1206 (3216 Metric) SMD	R5	RESC1206(3216)_M	CMP-1014-00117-1	JCU Store				1		0.00
3313J-1-503E	3 mm Trimpot(R) Trimming Potentiometer, 50 KOhm, +/- 20%, 0.125 W, -55 to 125 degC, 3-Pin SMD, RoHS, Tape and Reel	R6_SMD_1, R6_SMD_2, R6_SMD_3	BOUR-3313J-1_V	CMP-2000-05588-1	JCU Store	X No. You must source this.			3		0.00
180K 5% 1206(3	180K 0.25W 5% 1206 (3216 Metric) SMD	R7	RESC1206(3216)_N	CMP-1014-00128-1	JCU Store				1		0.00
330R 5% 1206(3	330R 0.25W 5% 1206 (3216 Metric) SMD	R8, R14	RESC1206(3216)_M	CMP-1014-00062-1	JCU Store				6		0.00
0.2R 1% 1206(3	0.2R 0.5W 1% 1206 (3216 Metric) SMD	R9_SMD_1, R9_SMD_2, R9_SMD_3, R10_SMD_1, R10_SMD_2, R10_SMD_3	RESC1206(3216)_N	RES 0.47R 1% 1206(3216)	JCU Store				1		0.00
12K 5% 1206(32	12K 0.25W 5% 1206 (3216 Metric) SMD	R11	RESC1206(3216)_N	CMP-1014-00100-1	JCU Store				1		0.00
24K 5% 1206(32	24K 0.25W 5% 1206 (3216 Metric) SMD	R12	RESC1206(3216)_M	CMP-1014-00107-1	JCU Store				1		0.00
820R 5% 1206(3	820R 0.25W 5% 1206 (3216 Metric) SMD	R13, R15	RESC1206(3216)_M	CMP-1014-00072-1	JCU Store				3		0.00
51K 5% 1206(32	51K 0.25W 5% 1206 (3216 Metric) SMD	R16	RESC1206(3216)_M	CMP-1014-00115-1	JCU Store				3		0.00
1M8 5% 1206(3	1M8 0.25W 5% 1206 (3216 Metric) SMD	R17_SMD_1, R17_SMD_2, R17_SMD_3	RESC1206(3216)_M	CMP-1014-00152-1	JCU Store				1		0.00
10K 5% 1206(32	10K 0.25W 5% 1206 (3216 Metric) SMD	R18_SMD_1, R18_SMD_2, R18_SMD_3	RESC1206(3216)_M	CMP-1014-00098-1	JCU Store				1		0.00
RT7272A DC/DC	Richtek RT7272A 3A, 36V, 500kHz Synchronous Step-Down Converter	U1	RT7272A	RT7272A DC/DC Step-Down Converter	Element14	2392657			2	4.56	9.12
									1		0.00
Total											$31.40

These are long designators that won't fit on your silkscreen.

Please find LEDs that are in stock at element14.

7/10

Electronics design requires a lot of attention to detail. Fix up these issues and you're ready to make your PCB.