Voltage, Current, and Measuring Instruments

01:41 h

Discussion outline

Learning outcomes

After completing this section, you will be able to:

- Define voltage and current.
- Use a multimeter for dc voltage and current measurements.
- Operate a component of the AC/DC Training System: the dc motor.

The discussion of the present exercise covers the following points:

- The notion of voltage
- The notion of current
- Voltage and current: an analogy for better comprehension
- Voltage measurement using a voltmeter
- Current measurement using an ammeter
- Introduction to the multimeter
- Training system component: the dc motor

The notion of voltage

In Exercise 1, you saw that electricity is defined as the flow of electrons through a conducting material. In order for that flow of electrons to occur, it is necessary to apply a force on the electrons. That force is called the electromotive force (EMF) or, as it is most commonly called, **voltage**. Therefore, the voltage applied across a conductor indicates the intensity of the force exerted on the electrons in the conductor (i.e., the force which causes electrons to flow). The higher the voltage, the higher the force exerted on the electrons. Voltage is measured in volts (V) after Italian physicist Alessandro Volta who invented what is considered the first chemical battery. In this course, voltage is denoted using the letter E. Note that voltage is also often denoted using the letter V or U.

Figure 60: Italian physicist Alessandro Volta.

Voltage is always measured as a difference in charge (a potential difference) between two points in a circuit. When two points are connected by a conducting material, electrical current flows from the point with the highest voltage to the point with the lowest voltage. This property is the basic principle of power sources. For example, in a dc power source such as the 1.2 V battery shown in Figure 61, the positive terminal of the battery has a voltage of 1.2 V, while the negative terminal of the battery has a voltage of 0 V. Therefore, the voltage or potential difference between both terminals is equal to 1.2 V. This means that a voltage of 1.2 V will be applied to any load (e.g., flashlight, music player, photo camera, telephone) connected to the battery terminals and that electrical current will flow from the positive terminal of the battery, through the load, and then to the negative terminal.

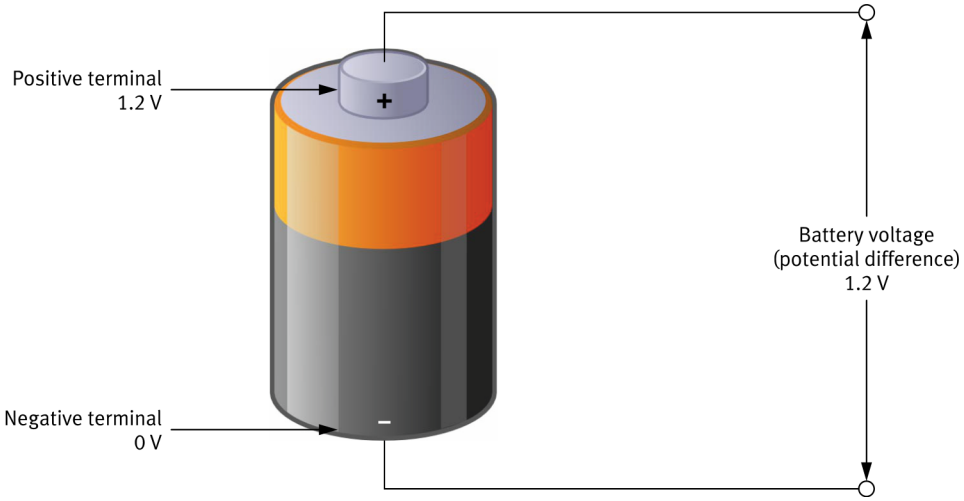

Figure 61: Voltage across a 1.2 V battery.

The notion of current

Another important notion in electricity is the current. Whereas voltage indicates the amount of force exerted on the electrons in a conductor causing them to move, current represents the number of electrons passing through a conductor as a function of time. The higher the current in a conductor, the higher the number of electrons

© Festo Didactic

passing through it per second and the greater the amount of electricity flowing in the conductor. Current is measured in amperes (A) after French mathematician and physicist André-Marie Ampère, who is considered the father of electrodynamics. Current is usually denoted using the letter I.

Figure 62: French mathematician and physicist André-Marie Ampère.

There are two ways to represent the direction of current in a circuit:

1. The first is to consider the direction of electrical current to be the same as the direction of the electrons flowing in the circuit. In this representation, current flows from the negative terminal of the dc power source to the positive terminal because electrons flow from the negative terminal to the positive terminal. This is shown by the red arrow in (a) of Figure 63. This representation of the direction of current flow is very rarely used and will not be used in this course.

2. The second way is to consider the direction of electrical current to be the same as the direction of the positive charges flowing in the circuit. In this representation, current flows from the positive terminal of the dc power source to the negative terminal. This is shown by the blue arrow in (b) of Figure 63. This representation of the direction of current flow is called the conventional direction of current and is the one that will be used in this course.

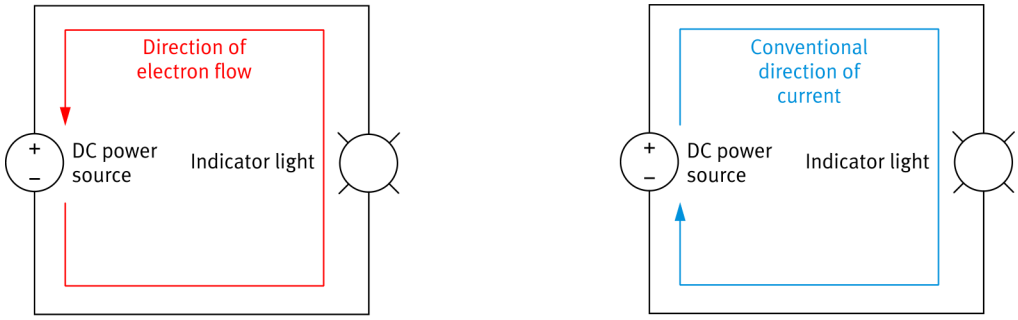

(a) Direction of electron flow

(b) Conventional direction of current

Figure 63: Current direction in a dc circuit.

Voltage and current: an analogy for better comprehension

When defining the notions of voltage and current, it is very common to use the concrete analogy of a water tank to help comprehend how voltage and current affect electrical circuits. Consider for example the filled and depleted water tanks with a discharge tube shown in the following figure.

Due to gravity, a certain pressure will be exerted so that water exits the water tank through the discharge tube. The more water in the tank, the more pressure is measured in the discharge tube. Furthermore, the more pressure is measured in the discharge tube, the more water will flow through it. Therefore, a high water capacity results in a high water pressure and a high water flow.

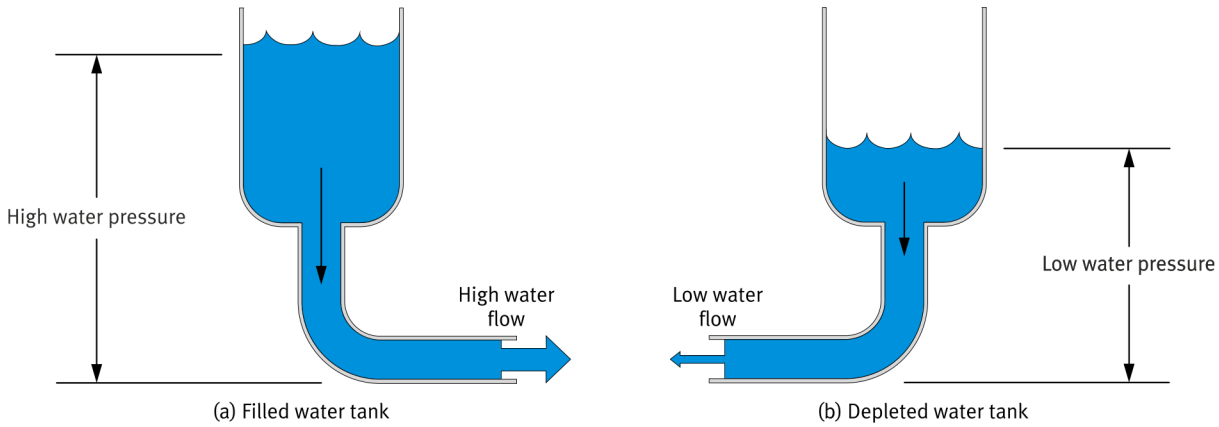

Figure 64: Relationships between water quantity, pressure, and flow in filled and depleted water tanks.

The same relationships are true between electrical charge, voltage, and current if we consider that electrical charge is equal to water capacity, voltage is equal to water pressure, and current is equal to water flow. Consider for example the charged and discharged batteries connected to identical indicator lights shown in the following figure.

As the figure shows, the more electric charges in the battery, the higher the voltage measured across its terminals and the higher the amount of current flowing in the indicator light. Therefore, for a given load connected to a battery, a high electrical charge results in a high voltage and a high current.

© Festo Didactic

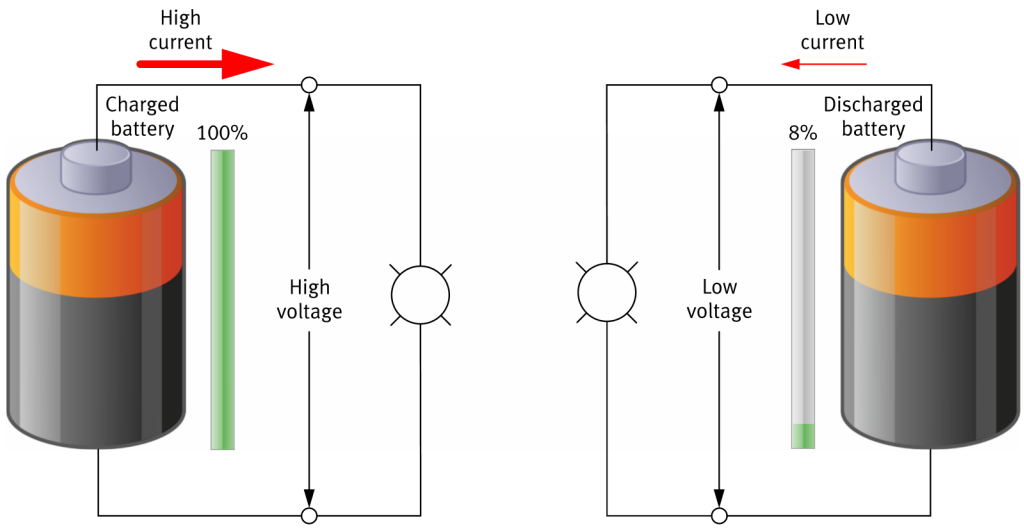

(a) Charged battery connected to an indicator light

(b) Discharged battery connected to an indicator light

Figure 65: Relationships between electrical charge, voltage, and current in charged and discharged batteries connected to identical indicator lights.

Voltage measurement using a voltmeter

Voltage is measured using a voltmeter. Since voltage represents the potential difference between two points in a circuit, it is necessary to connect the voltmeter across (i.e., in parallel with) the two points where the voltage is to be measured, such as across the positive and negative terminals of a power source, for example. This is shown in the following figure. In the figure, the nominal voltage of the dc power source is 24 V. Therefore, when a voltmeter is connected to its terminals, it indicates a voltage of 24 V. Note that a voltmeter is specially designed so that virtually no current flows through it, thus preventing the introduction of any imprecision in the electrical measurements.

The figure also shows that, when connecting a voltmeter, it is necessary to connect the positive terminal of the voltmeter (usually in red and designated using a +, E, or V sign) to the positive terminal of the component under test, and the negative terminal of the voltmeter (usually in black and designated using a COM or - sign) to the negative terminal of the component under test.

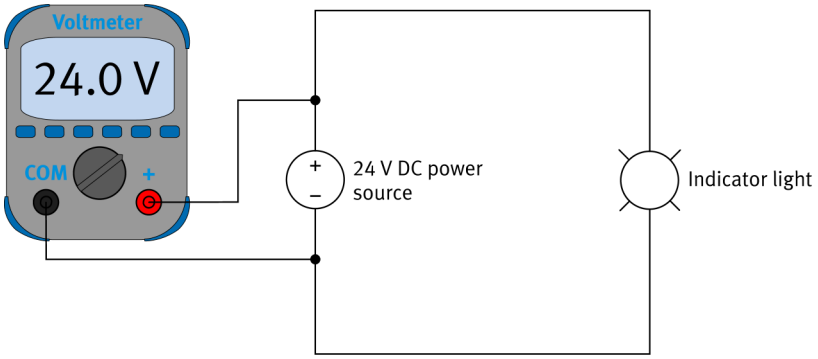

Figure 66: Using a voltmeter to measure the voltage across a dc power source.

Just like all other components in an electrical circuit, voltmeters have a circuit diagram symbol. The symbol shown in the following table is used in this course to represent a voltmeter.

Table 9: Voltmeter symbol.

Component	Symbol
Voltmeter	V

Representing the voltmeter in Figure 66 using its circuit diagram symbol results in the following circuit. As you can see, a + symbol indicates the polarity of the voltmeter probes.

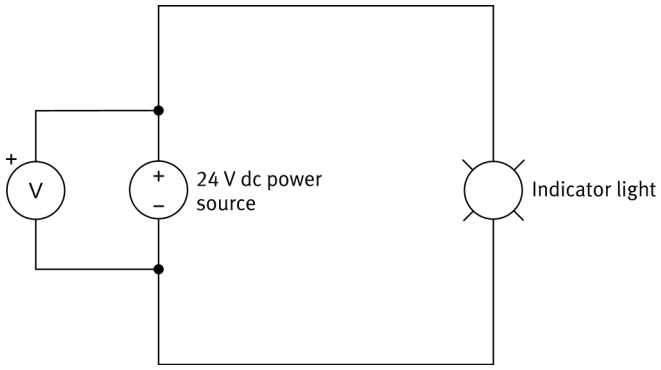

Figure 67: Using a voltmeter to measure the voltage across a dc power source.

© Festo Didactic

Current measurement using an ammeter

Current is measured using an ammeter. Since current represents the electrical current flowing through a conductor, it is necessary to connect the ammeter in series with the point where the current is to be measured. This is shown in the following figure. In the figure, 1 A is flowing between the dc power source and the indicator light. Therefore, when an ammeter is connected in series with the dc power source, it indicates a current of 1 A. Note that an ammeter is specially designed so that current flows virtually freely through it, thus preventing the introduction of any imprecision in the electrical measurements. This property, however, also means that a very high and possibly damaging current can flow in the ammeter if it is improperly connected. Therefore, when connecting an ammeter, it is important to make especially sure to observe the required connections.

The figure also shows that, when connecting an ammeter, it is necessary to connect the positive terminal of the ammeter (usually in red and designated using a +, I, or A sign) so that current enters through it, and the negative terminal of the ammeter (usually in black and designated using a COM or - sign) so that current exits through it.

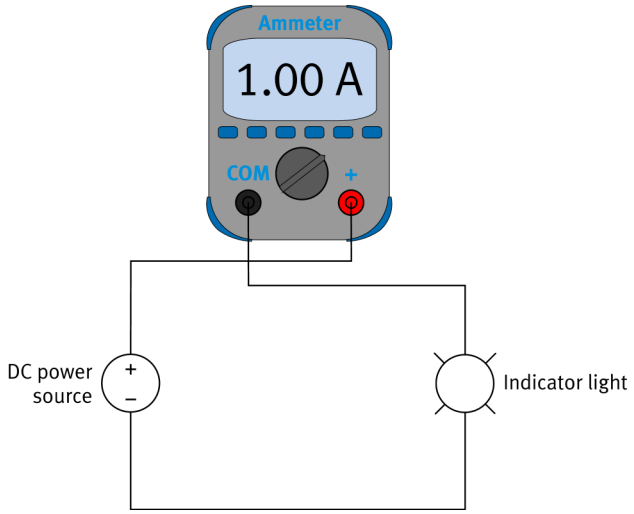

Figure 68: Using an ammeter to measure the current flowing between a dc power source and an indicator light.

Just as all other components in an electrical circuit, ammeters have a circuit diagram symbol. The symbol shown in the following table is used in this course to represent an ammeter.

Table 10: Ammeter symbol.

Component	Symbol
Ammeter	A

Representing the ammeter in Figure 66 using its circuit diagram symbol results in the following circuit. As you can see, a + symbol indicates the polarity of the ammeter probes.

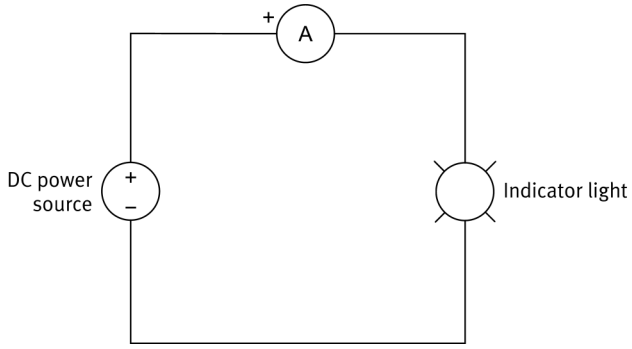

Figure 69: Using an ammeter to measure the current flowing between a dc power source and an indicator light.

Introduction to the multimeter

A multimeter is a device that combines multiple measuring instruments. The different functions of a multimeter vary from one model to another. However, at the minimum, most multimeters measure dc and ac voltages, dc and ac currents, and resistance (resistance is covered in the next exercise). The function of the multimeter is usually selected using a rotating knob, such as the one shown in the typical multimeter of the following figure. Multimeter functions are identified by a symbol on the multimeter. The meanings of these symbols are given in the figure. Multimeter functions indicated in red have not yet been covered and need not be studied for the moment.

Note that, on a multimeter, dc and ac measurements can be differentiated one from the other by the symbol indicated beside the letter A or V. The following table shows the symbols for dc measurements and ac measurements. Alternately, the type of current measured by a particular function is often indicated just after the unit of the measured parameter. For example, a function measuring voltage in dc circuits can be identified as Vdc, while a function measuring voltage in ac circuits can be identified as Vac.

© Festo Didactic

Table 11: DC and ac measurement symbols.

Component	Symbol
DC measurement	———
AC measurement	∿

Figure 70: Typical multimeter.

To ensure proper use of a multimeter and avoid damaging it, always verify the following before turning the power source on:

- The multimeter is properly connected according to the parameter that requires measurement. For example, if measuring voltage across a component, connect the multimeter as you would with a voltmeter, i.e., in parallel with the component.
- The positive (red) probe is connected to the proper terminal of the multimeter for the parameter that requires measurement. For example, when measuring current, connect the red probe to the red current measurement terminal.
- The probes of the multimeter are connected with respect to polarity. Otherwise, inverting the polarity of the probes will also invert the polarity of the measurement.
- The proper function is selected for the parameter that requires measurement.
- The magnitude of the parameter to measure is within the range of the currently selected function. For example, if the multimeter is used to measure the voltage of a 24 V battery, make sure to select the voltage measurement function in volts (V), and not the one in millivolts (mV).

Training system component: the dc motor

In its most basic definition, the dc motor included in the training system transforms electrical energy into the kinetic energy used to make the rotor (rotating part of the motor) rotate. Note that dc motors are covered in more detail in Exercise 9. The electrical diagram symbol for a dc motor is shown in the following table.

Table 12: DC motor symbol.

Component	Symbol
DC motor	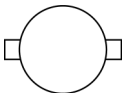

The dc motor included in the training system has a nominal voltage of 24 V. Applying a different voltage across the dc motor does not prevent its operation, but rather modifies its rotation speed. The principles behind this characteristic of dc motors are explained in Exercise 9. When a voltage of 24 V is applied to the dc motor, it rotates at a speed of 50 r/min (rotations or full turn per minute).

Procedure outline

The Procedure is divided into the following sections:

© Festo Didactic