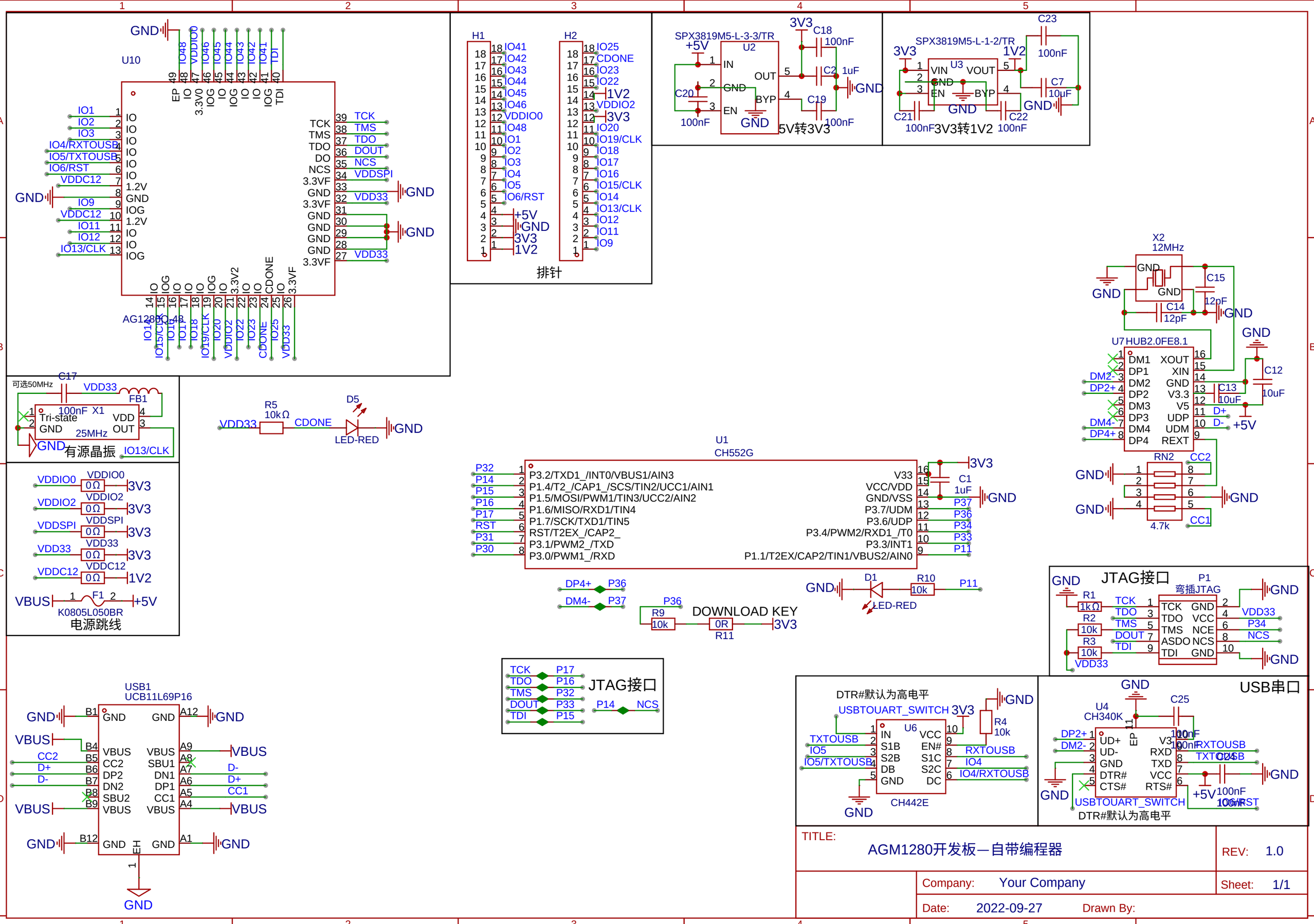
U10
AG1280Q
H1
H2
排针
SPX3819M5-L-3-3/TR
5V转3V3
SPX3819M5-L-1-2/TR
3V3转1V2
X2
12MHz
U7 HUB2.0FE8.1
可选50MHz
有源晶振
R5
10kΩ
D5
LED-RED
U1
CH552G
RN2
4.7k
JTAG接口
P1
弯插JTAG
DOWNLOAD KEY
USB1
UCB11L69P16
电源跳线
K0805L050BR
U6
CH442E
DTR#默认为高电平
USBTOUART_SWITCH
U4
CH340K
USB串口
TITLE:
AGM1280开发板—自带编程器
REV: 1.0
Company: Your Company
Sheet: 1/1
Date: 2022-09-27
Drawn By: