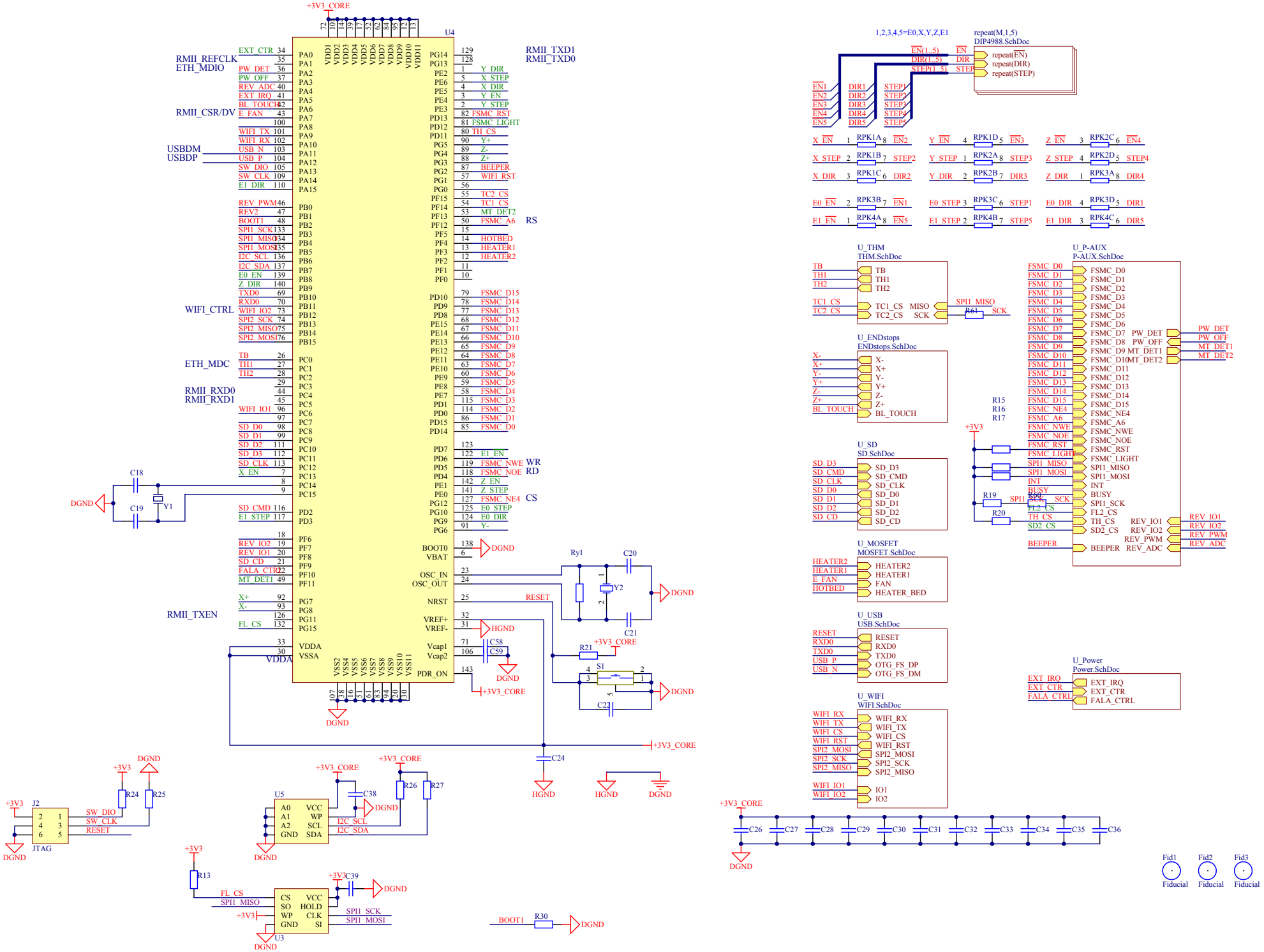

U4
+3V3_CORE
RMII_REFCLK
ETH_MDIO
RMII_CSR/DV
USBDM
USBDP
WIFI_CTRL
ETH_MDC
RMII_RXD0
RMII_RXD1
RMII_TXEN
RMII_TXD1
RMII_TXD0
RS
WR
RD
CS
DGND
HGND
RESET
Ry1
Y2
S1
J2
JTAG
U5
U3
1,2,3,4,5=E0,X,Y,Z,E1
repeat(M,1,5)
DIP4988.SchDoc
U_THM
THM.SchDoc
U_ENDstops
ENDstops.SchDoc
U_SD
SD.SchDoc
U_MOSFET
MOSFET.SchDoc
U_USB
USB.SchDoc
U_WIFI
WIFI.SchDoc
U_P-AUX
P-AUX.SchDoc
U_Power
Power.SchDoc
Fid1
Fid2
Fid3
Fiducial

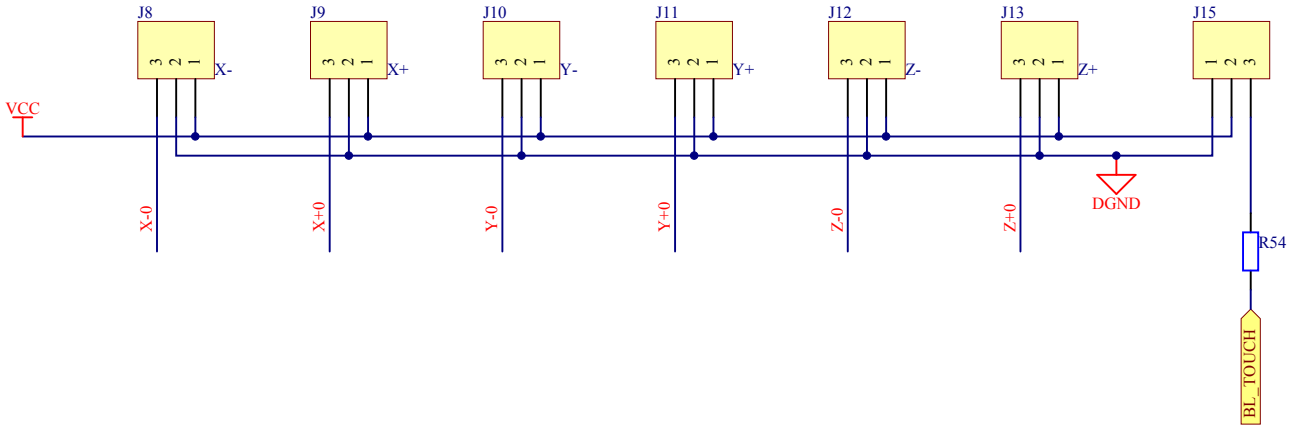
J8
J9
J10
J11
J12
J13
J15
X-
X+
Y-
Y+
Z-
Z+
VCC
X-0
X+0
Y-0
Y+0
Z-0
Z+0
DGND
R54
BL_TOUCH

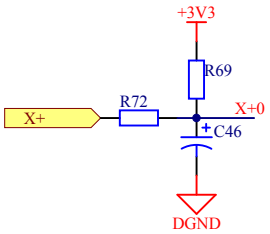
+3V3
R69
R72
X+
X+0
C46
DGND

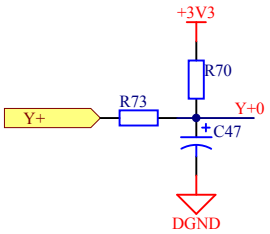
+3V3
R70
R73
Y+
Y+0
C47
DGND

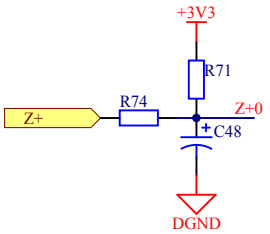
+3V3
R71
R74
Z+
Z+0
C48
DGND

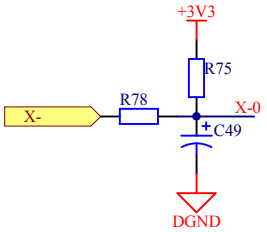
+3V3
R75
R78
X-
X-0
C49
DGND

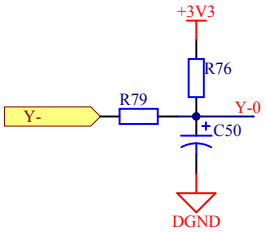
+3V3
R76
R79
Y-
Y-0
C50
DGND

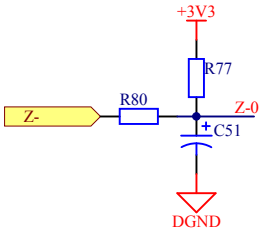
+3V3
R77
R80
Z-
Z-0
C51
DGND

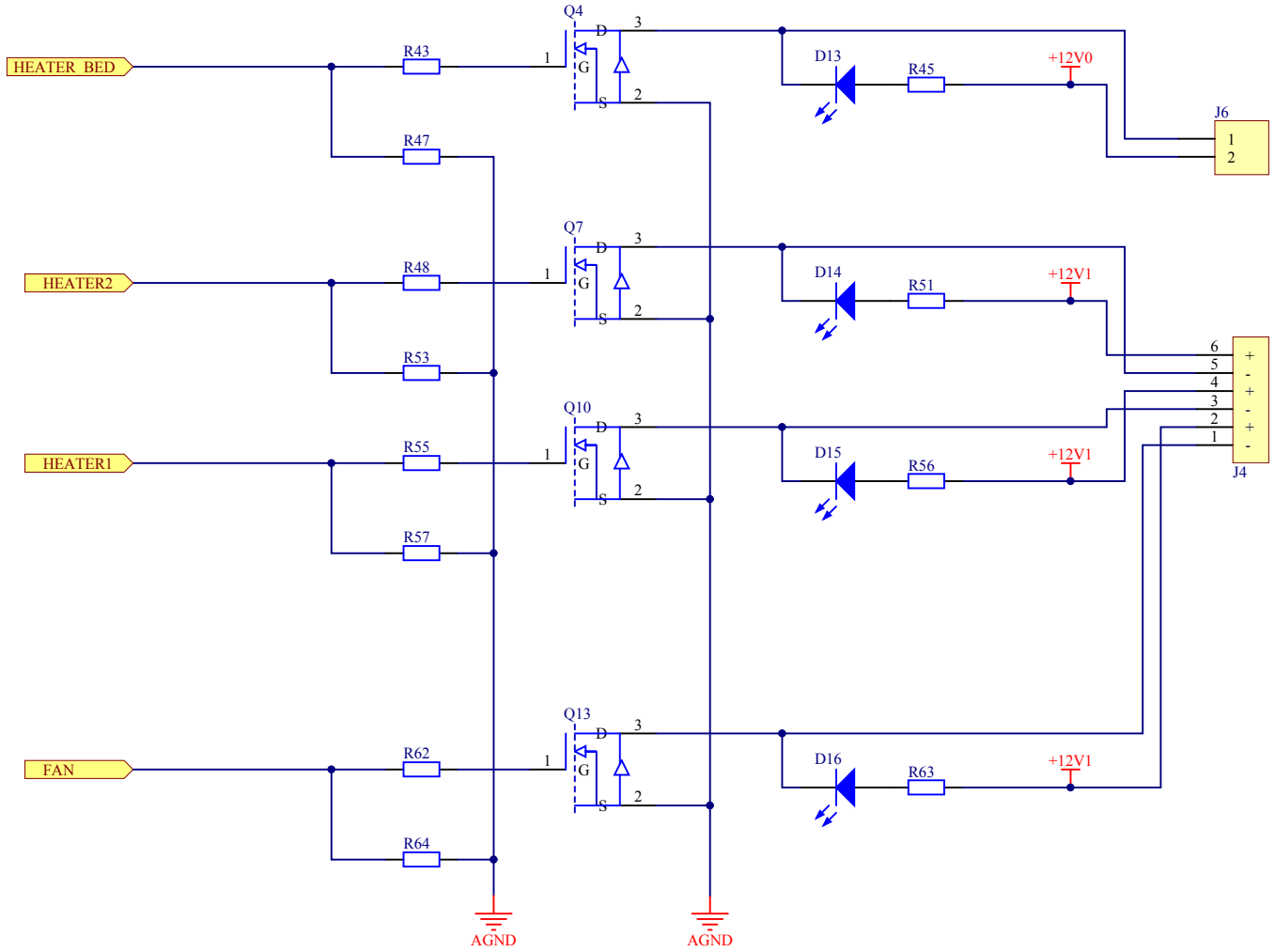
HEATER_BED
HEATER2
HEATER1
FAN
R43
R47
R48
R53
R55
R57
R62
R64
Q4
Q7
Q10
Q13
D
G
S
1
2
3
D13
D14
D15
D16
R45
R51
R56
R63
+12V0
+12V1
J6
J4
AGND
AGND

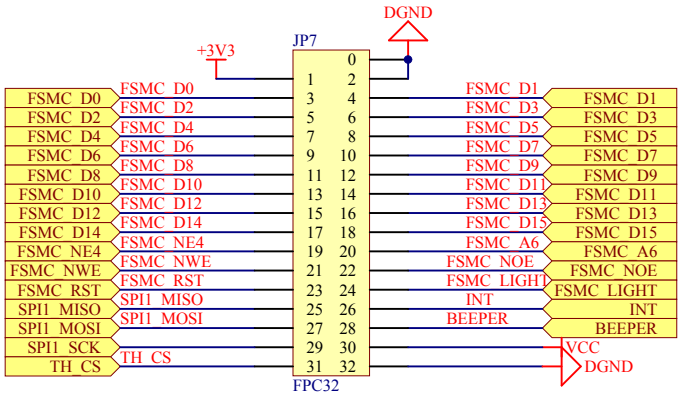
DGND
+3V3
JP7
FSMC_D0
FSMC_D2
FSMC_D4
FSMC_D6
FSMC_D8
FSMC_D10
FSMC_D12
FSMC_D14
FSMC_NE4
FSMC_NWE
FSMC_RST
SPI1_MISO
SPI1_MOSI
SPI1_SCK
TH_CS
FSMC_D1
FSMC_D3
FSMC_D5
FSMC_D7
FSMC_D9
FSMC_D11
FSMC_D13
FSMC_D15
FSMC_A6
FSMC_NOE
FSMC_LIGHT
INT
BEEPER
VCC
DGND
FPC32

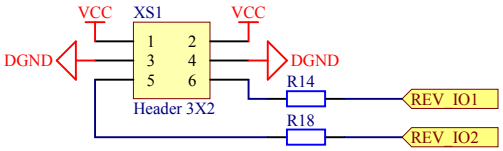
VCC
XS1
DGND
R14
REV_IO1
R18
REV_IO2
Header 3X2

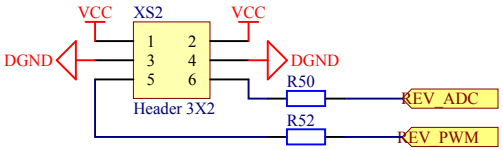
VCC
XS2
DGND
R50
REV_ADC
R52
REV_PWM
Header 3X2

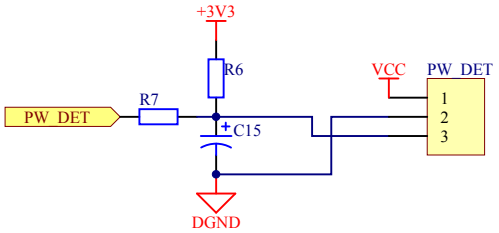
+3V3
R6
VCC
PW_DET
R7
PW_DET
C15
DGND

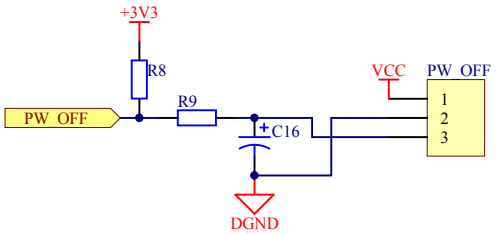
+3V3
R8
VCC
PW_OFF
R9
PW_OFF
C16
DGND

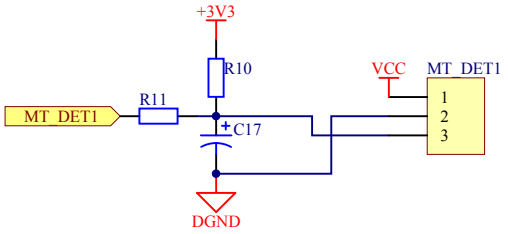
+3V3
R10
VCC
MT_DET1
R11
MT_DET1
C17
DGND

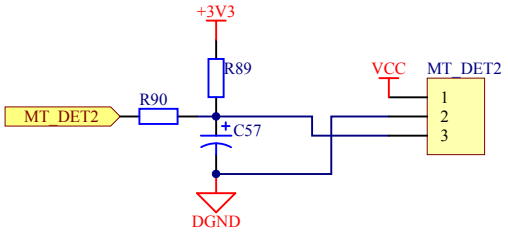
+3V3
R89
VCC
MT_DET2
R90
MT_DET2
C57
DGND

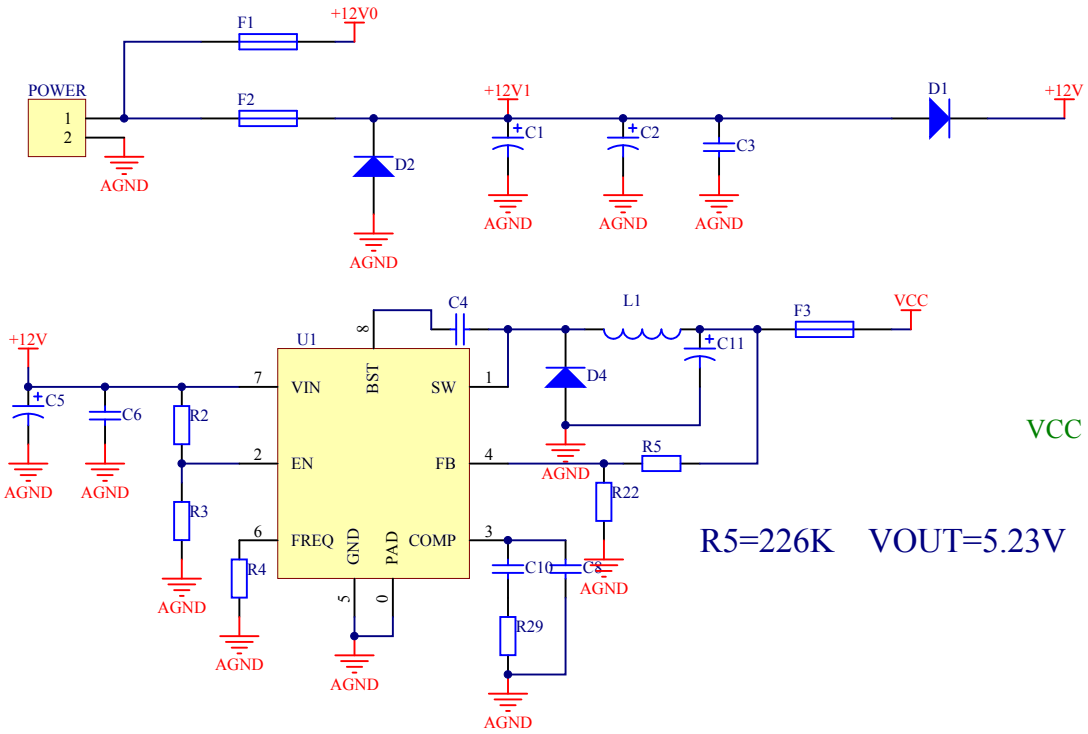
POWER
F1
+12V0
F2
+12V1
D1
+12V
D2
C1
C2
C3
AGND
C4
L1
F3
VCC
U1
VIN
BST
SW
EN
FB
FREQ
GND
PAD
COMP
C5
C6
R2
R3
R4
D4
C11
R5
R22
C10
C8
R29
VCC
5.20V
R5=226K VOUT=5.23V
VOUT= 0.8V x (R5 + R22)/R22
R2=220K,R22=40.2K, V=5.2V
R2=210K,R22=40.2K, V=5V

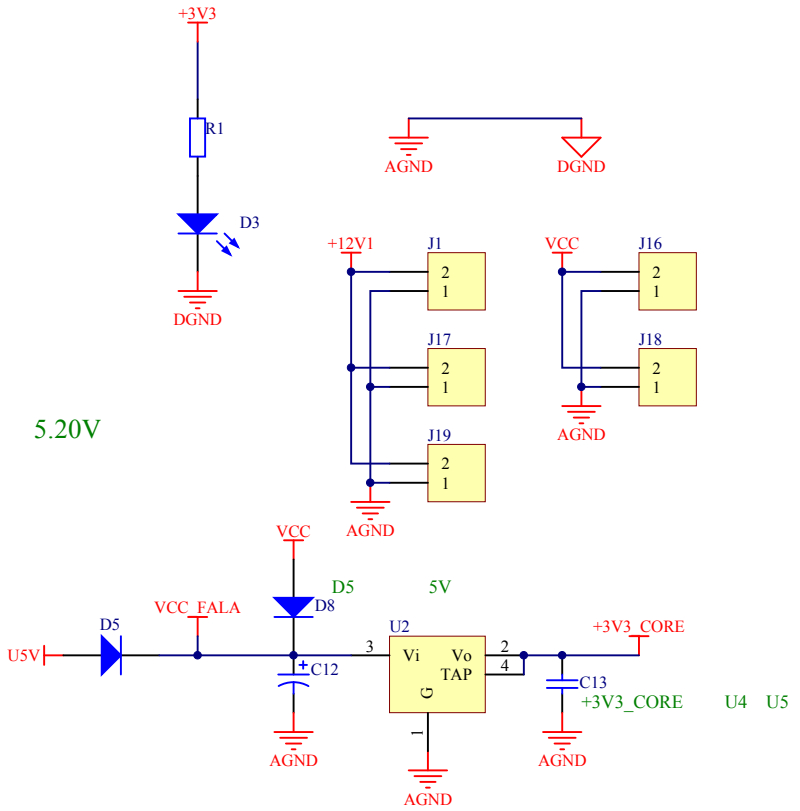
+3V3
R1
D3
DGND
AGND
+12V1
J1
J17
J19
VCC
J16
J18
D5
5V
VCC_FALA
D8
U5V
U2
Vi
Vo
TAP
G
C12
C13
+3V3_CORE
U4 U5

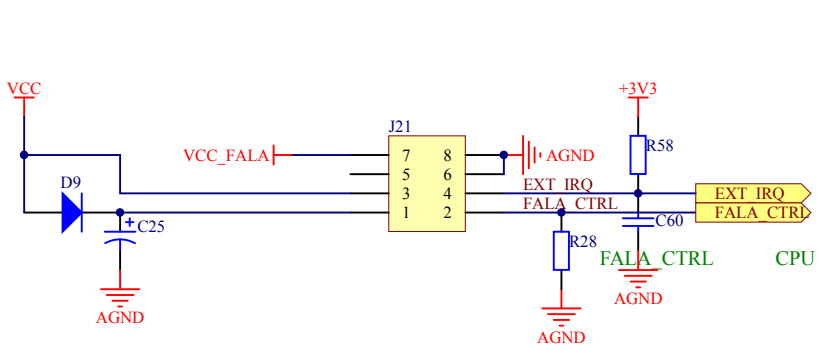
VCC
VCC_FALA
J21
D9
C25
AGND
+3V3
R58
EXT_IRQ
FALA_CTRL
C60
R28
FALA_CTRL CPU IO

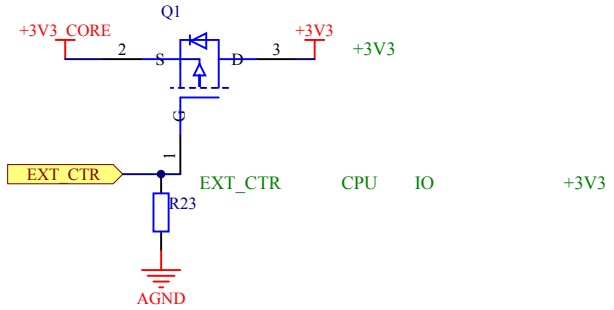
Q1
+3V3_CORE
+3V3
S
D
G
EXT_CTR
R23
EXT_CTR CPU IO +3V3

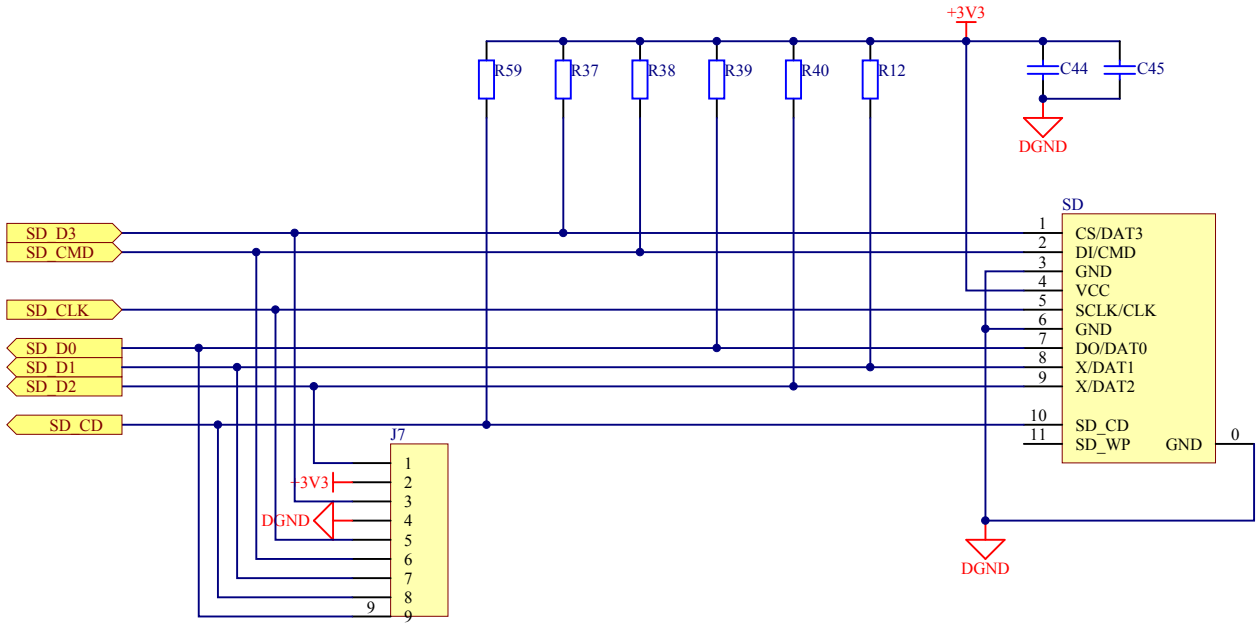
+3V3
R59
R37
R38
R39
R40
R12
C44
C45
DGND
SD
SD_D3
SD_CMD
SD_CLK
SD_D0
SD_D1
SD_D2
SD_CD
1
2
3
4
5
6
7
8
9
10
11
CS/DAT3
DI/CMD
GND
VCC
SCLK/CLK
GND
DO/DAT0
X/DAT1
X/DAT2
SD_CD
SD_WP
GND
0
DGND
J7
+3V3
DGND
1
2
3
4
5
6
7
8
9
9

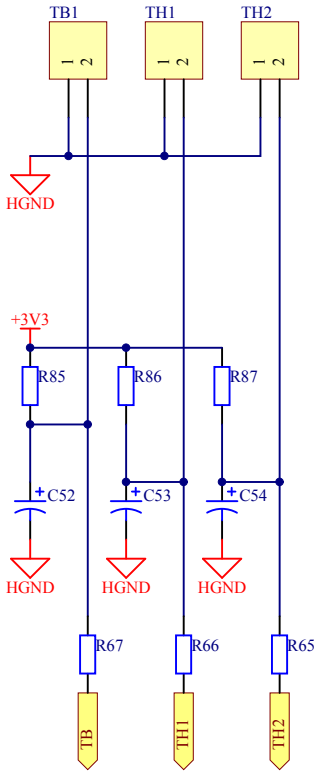
TB1
TH1
TH2
1
2
HGND
+3V3
R85
R86
R87
C52
C53
C54
HGND
HGND
HGND
R67
R66
R65
TB
TH1
TH2

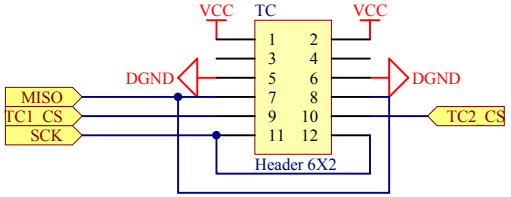
VCC
TC
VCC
1
2
3
4
5
6
7
8
9
10
11
12
DGND
DGND
MISO
TC1_CS
SCK
TC2_CS
Header 6X2

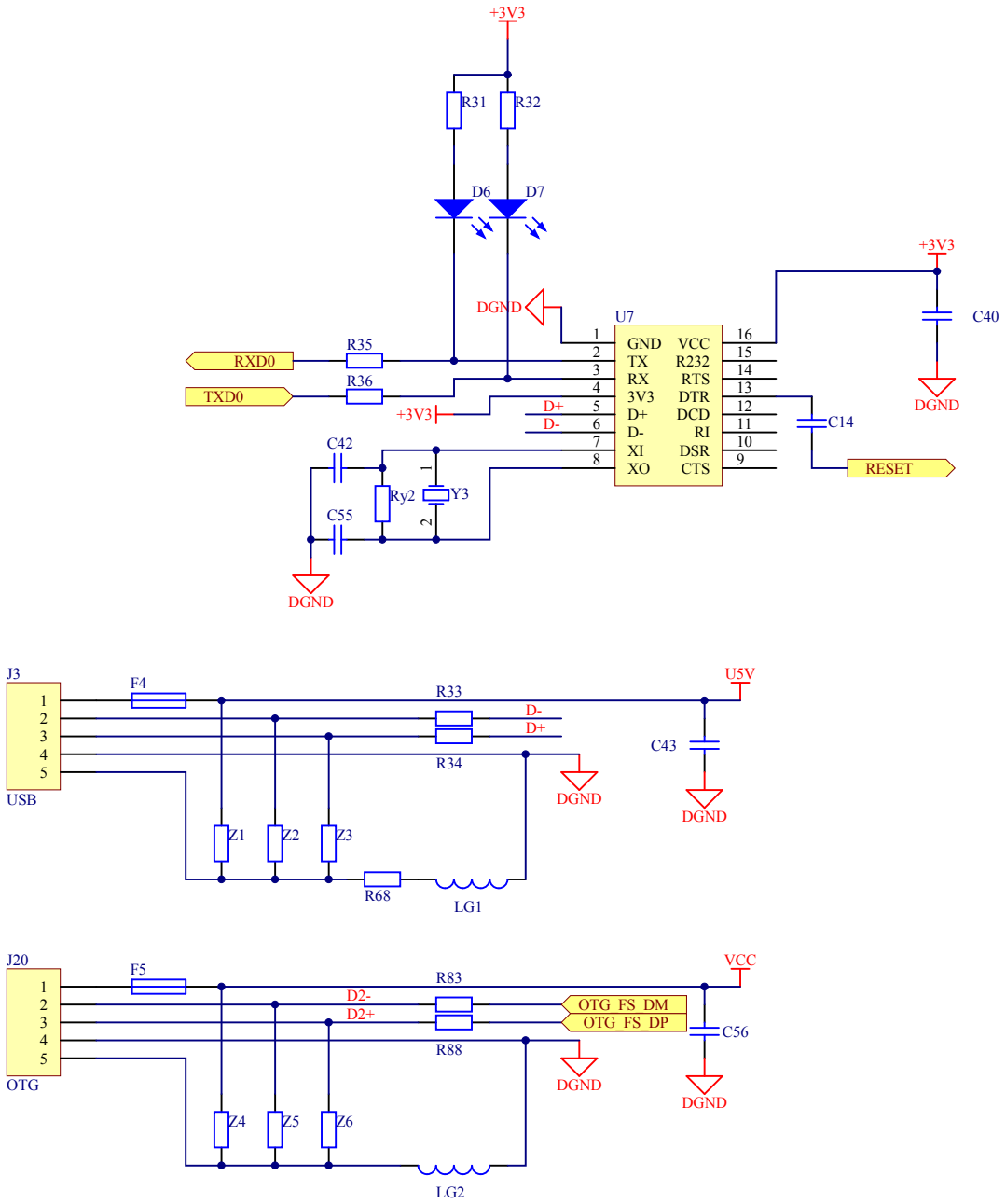
+3V3
R31
R32
D6
D7
DGND
U7
GND
TX
RX
3V3
D+
D-
VCC
R232
RTS
DTR
DCD
RI
DSR
CTS
XI
XO
RXD0
TXD0
R35
R36
+3V3
D+
D-
C42
C55
Ry2
Y3
DGND
C40
C14
RESET
J3
USB
F4
R33
R34
D-
D+
DGND
U5V
C43
DGND
Z1
Z2
Z3
R68
LG1
J20
OTG
F5
R83
R88
D2-
D2+
OTG_FS_DM
OTG_FS_DP
DGND
VCC
C56
DGND
Z4
Z5
Z6
LG2

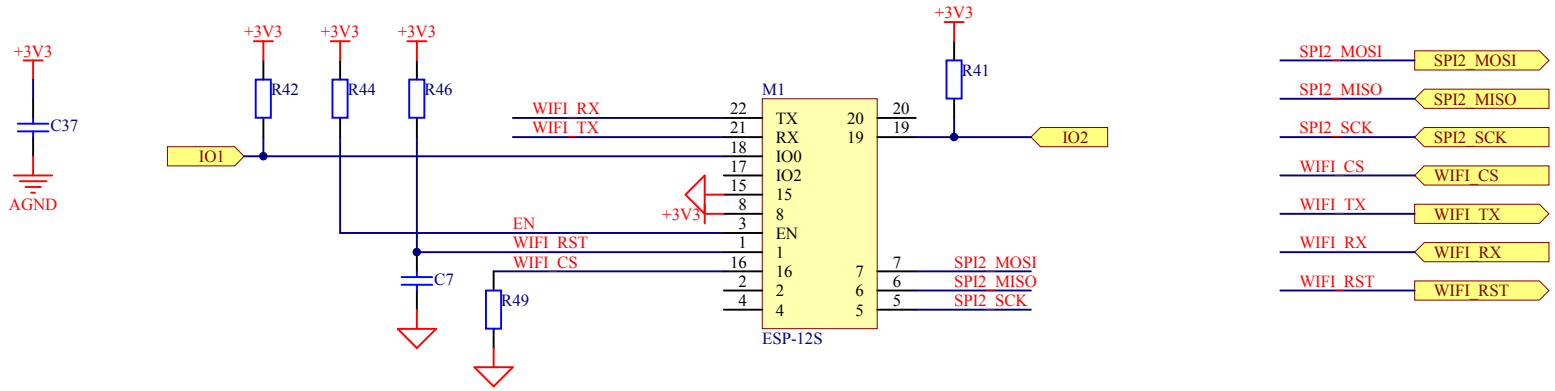
+3V3
C37
AGND
+3V3
+3V3
+3V3
R42
R44
R46
IO1
WIFI_RX
WIFI_TX
EN
WIFI_RST
WIFI_CS
+3V3
C7
R49
M1
TX
RX
IO0
IO2
15
8
EN
1
16
2
4
20
19
7
6
5
ESP-12S
+3V3
R41
IO2
SPI2_MOSI
SPI2_MISO
SPI2_SCK
SPI2_MOSI
SPI2_MISO
SPI2_SCK
WIFI_CS
WIFI_TX
WIFI_RX
WIFI_RST
WIFI_CS
WIFI_TX
WIFI_RX
WIFI_RST

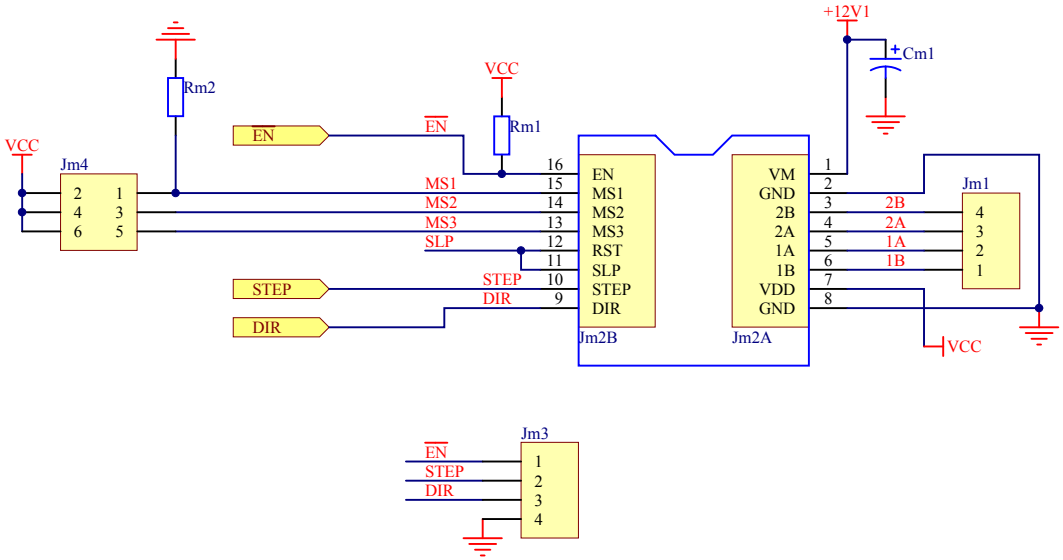
VCC
Jm4
2
4
6
1
3
5
Rm2
EN
EN
VCC
Rm1
MS1
MS2
MS3
SLP
STEP
DIR
16
15
14
13
12
11
10
9
EN
MS1
MS2
MS3
RST
SLP
STEP
DIR
Jm2B
+12V1
Cm1
VM
GND
2B
2A
1A
1B
VDD
GND
1
2
3
4
5
6
7
8
Jm2A
Jm1
4
3
2
1
VCC
Jm3
EN
STEP
DIR
1
2
3
4