LL(1) CFG $\langle T, NT, P, S\rangle$

exp. tokens: $(x+y)\$$

P3: $S \to E\$$, $E \to TE'$, $E' \to +TE' \mid \varepsilon$, $T \to FT'$, $T' \to *FT' \mid \varepsilon$, $F \to (E) \mid id$.

Notation: $a \in T$, $A \in NT$, $\alpha, \beta \in (T \cup NT)^*$, $w \in T^*$

input (remaining)	stack (lhs)	action ⟨ predict / match	reason
$(x+y)\$$	S	$M[S,(] = \{E\$\}$	$S \to E\$$
	$E\$$	$M[E,(] = \{TE'\}$	$E \to TE'$
	$TE'\$$	$M[T,(] = \{FT'\}$	$T \to FT'$
	$FT'E'\$$	$M[F,(] = \{(E)\}$	$F \to (E) \mid id$
$(x+y)\$$	$(E)T'E'\$$	match ✓	
$x+y)\$$	$E)T'E'\$$	$M[E,id] = \{TE'\}$	$E \to TE'$
	$TE')T'E'\$$	$M[T,id] = \{FT'\}$	$T \to FT'$
	$FT'E')T'E'\$$	$M[F,id] = \{id\}$	$F \to id$
$x+y)\$$	$id\,T'E')T'E'\$$	match ✓	
$+y)\$$	$T'E')T'E'\$$	$M[T',+] = \{\varepsilon\}$	$T' \to *FT' \mid \varepsilon$
	$E')T'E'\$$	$M[E',+] = \{+TE'\}$	$E' \to +TE'$

AST for $(x+y)\$$

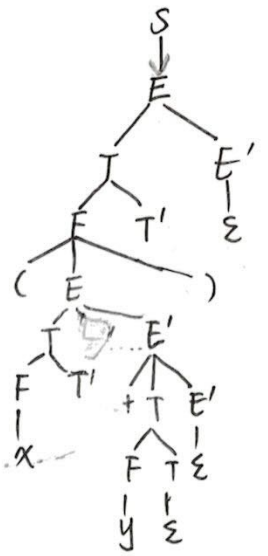

Action table

Top of stack (NT) \ Next token	id	+	*	(	)	$	reason
E	TE'			TE'			$E \to TE'$
E'		$+TE'$			ε	ε	$E' \to +TE' \mid \varepsilon$
T	FT'			FT'			$T \to FT'$
T'		ε	$*FT'$		ε	ε	$T' \to *FT' \mid \varepsilon$
F	id			(E)			$F \to (E) \mid id$
S	$E\$$			$E\$$			$S \to E\$$

S	E	E'	T	T'	F
(, id	(, id	+	(, id	*	(, id

- Left-recursion
- $S \to EOF \mid$
- Left | ε choice in grammar

if E then C₁ else C₂ / ε ← D

- Non-determinism exists when there are multiple actions!
- Need to LL(k) with larger k. or fix the grammar.

FIRST(α)

	$E\$$	TE'	FT'	$+TE'$	$*FT'$	(E)	id	ε
FIRST	(, id	(, id	(, id	+	*	(	id	ε

$FIRST(\alpha) \triangleq \{a \in T \mid \alpha \Rightarrow^* a\beta\} \cup \{\varepsilon \mid \alpha \Rightarrow^* \varepsilon\}$

init $FIRST(a) := \{a\}$ $FIRST(NT) := \{\}$

$A \to \alpha\beta$

while changes:

$A \to B\beta$

for all $\{\} \to \{\varepsilon\}$

$\{A \to B_1, A \to B_2\}$

Reason: $S \to E \to TE' \to FT'E' \to (\text{ or } id$

FOLLOW(NT)

S	E	E' ✓	T	T' ✓	F
$\$$	$)\$$	$)\$$	$+)\$$	$+)\$$	$+*)\$$

$FOLLOW(NT) \triangleq \{a \in T \mid S \Rightarrow^+ [\alpha] NT\, a [\beta]\}$

e.g. $S \Rightarrow E'$)

init $FOLLOW(S) := \{\$\}$ other $NT := \{\}$

while changes:

$A \to \alpha B[\beta]$

$FIRST(\beta) - \{\varepsilon\}$

Reason: $T \to FT'$ ↑ larger!

LR(0) <NFA + no Lookahead a>

~~78~~ 20 + Accept

CFG <T, NT, P2, S>

P2: S → E $

E → E+T | T

T → T*F | F

F → (E) | id

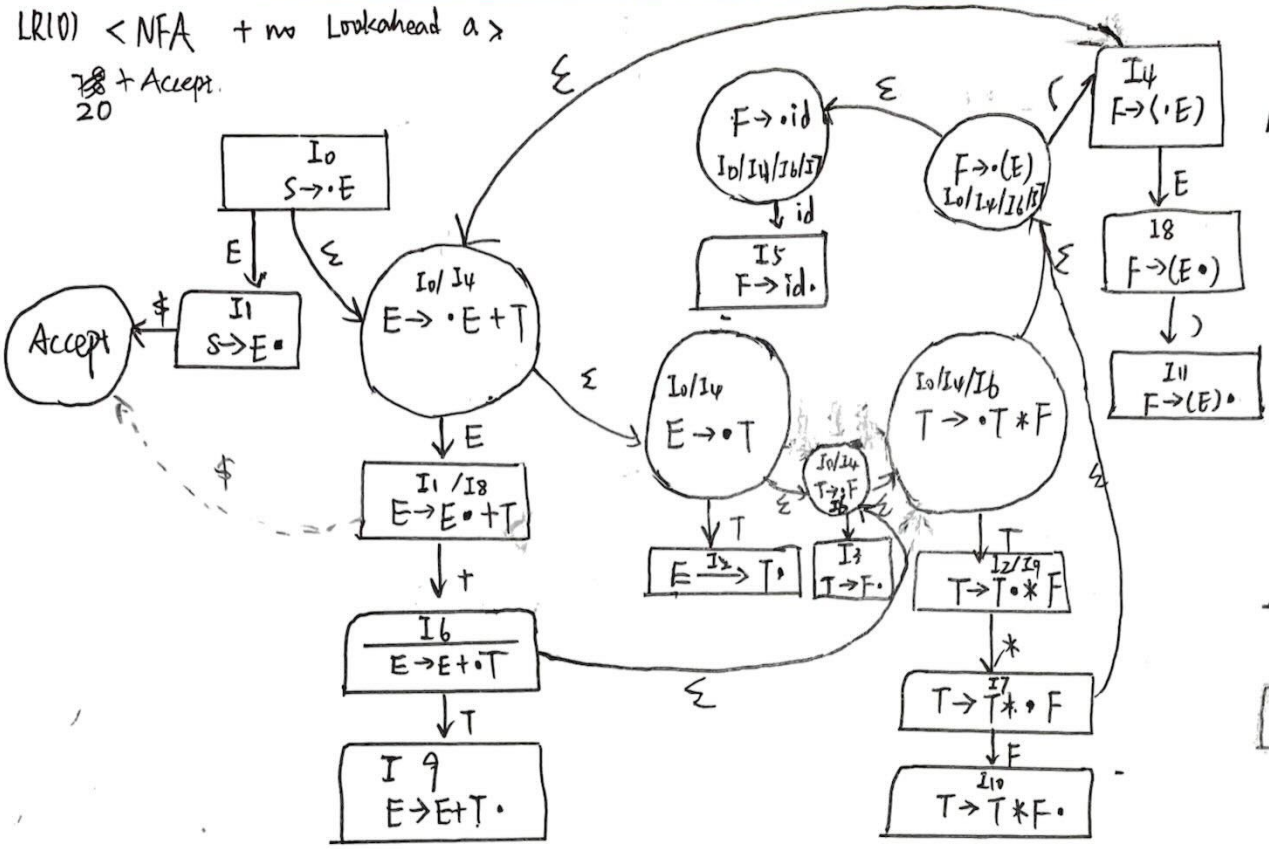

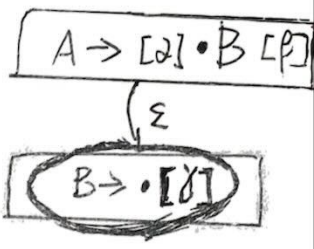

SLR(1), ~~LR(0)~~

<DFA + a> lookahead 11 + Accept

shift: A → α•aβ

δ(Ii, a) = Ij : Sj

δ(Ii, A) = Ij : GOTO j

Reduce B → β•

[A → α•]

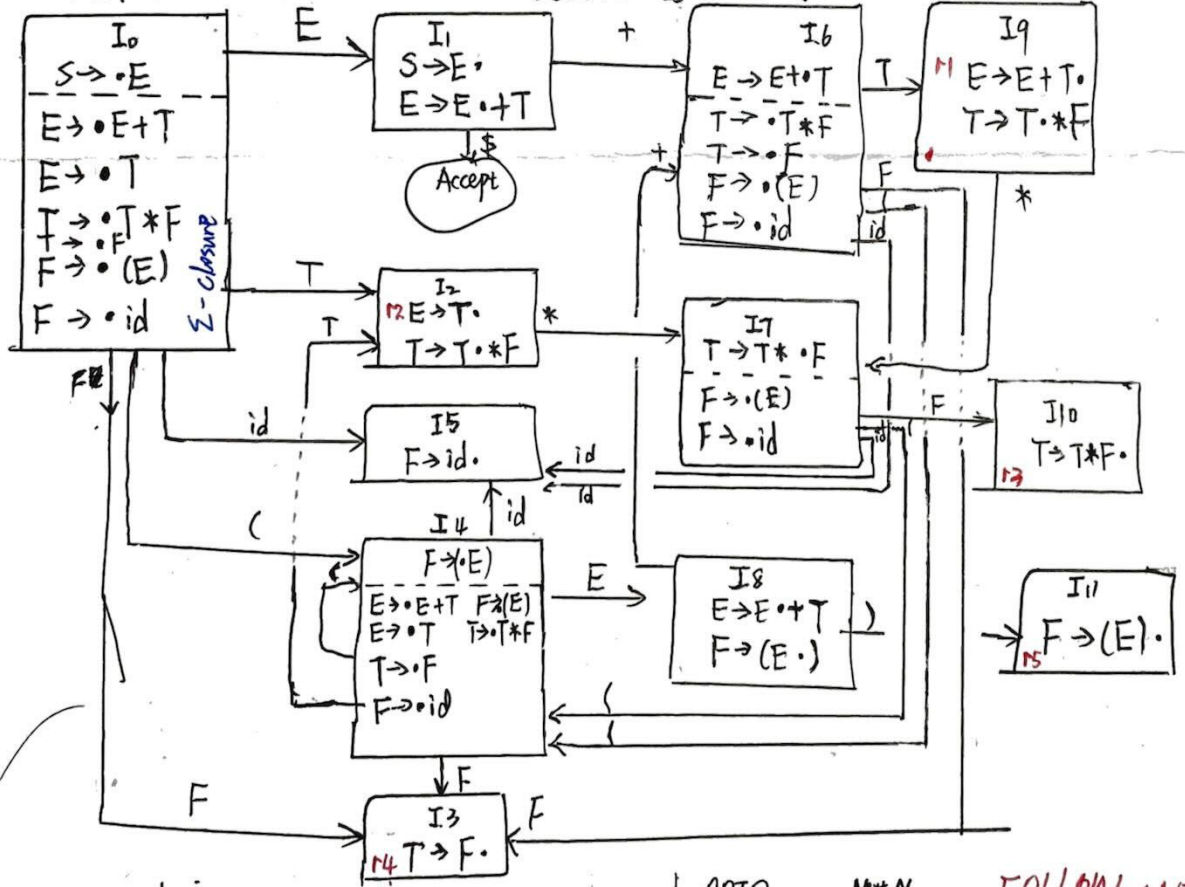

STATE	Next token id	ACTION +	*	(	)	$	GOTO E	T	F	Next N
0	S5			S4			S1	S2	S3	
1		S6				acc				
2		r2	S7/r2		r2	r2				
3		r4	r4		r4	r4				
4	S5			S4			8	2	3	
5		r6	r6		r6	r6				
6	S5			S4				9	3	
7	S5			S4					10	
8		S6			S11					
9		r1	S7/r1		r1	r1				
10		r3	r3		r3	r3				
11		r5	r5		r5	r5				

Top of Stack

FOLLOW (NT)

	S	E	T	F
	$	+)$	*+)$	

a ∈ FOLLOW(B). Non-determinism

shift / reduce conflict : LR(0)

> Solved by SLR(1) / fix Grammar

reduce / reduce conflict

∃a. a ∈ FOLLOW(A), a ∈ FOLLOW(B)

r1/r2

[S] LR(1) ~ LR(0) + lookahead + DFA

CFG ⟨T, NT, P2, S⟩
ex. tokens (x+y)$

P2: S → E$ T → T*F | F
E → E+T | T   F → (E) | id

input	stack →	= State + Symbol	action[x, a] ← reduce / shift	reason (premise)	: ACTION / GOTO ← same as action.
(x+y)$	$	0	a[0,(] = shift 4	F → •(E) ∈ δ(I0, ε) = I0 / S0	S4 = ACTION[0,(]
x+y)$	$(	04	a[4,id] = shift 5	F → •id ∈ δ(I0,() = I4 / S4	S4 = ACTION[4,id]
+y)$	$(id	045	a[5,+] = reduce F → id	"+" ∈ FOLLOW(F)	~ GOTO[4,F] = 3
	$(F	043	a[3,+] = reduce T → F	"+" ∈ FOLLOW(T)	: GOTO[4,T] = 2
	$(T	042	a[2,+] = reduce E → T	"+" ∈ FOLLOW(E)	GOTO[4,E] = 8
+y)$	$(E	048	a[8,+] = shift 6	E → E•+T ∈ δ(I0,(E) = I8 / S8	Action ←
y)$	$(E+	0486	a[6,id] = shift 8	F → •id ∈ δ(I0,(E+) = I6 / S6	
)$	$(E+id	04865	a[5,)] = reduce F → id	")" ∈ FOLLOW(F)	GOTO[6,F] = 3
	$(E+F	04863	a[3,)] = reduce T → F	")" ∈ FOLLOW(T)	GOTO[6,T] = 9
	$(E+T	04869	a[9,)] = reduce E → E+T	")" ∈ FOLLOW(E)	GOTO[4,E] = 8
)$	$(E	0488	a[8,)] = shift 11	E → (E•) ∈ δ(I0,(E) = I8 / S8	
$	$(E)	0411	a[11,$] = reduce F → (E)	"$" ∈ FOLLOW(F)	GOTO[0,F] = 3
	$F	0431	a[3,$] = reduce T → F	"$" ∈ FOLLOW(T)	GOTO[0,T] = 2
	$T	02	a[2,$] = reduce E → T	"$" ∈ FOLLOW(E)	GOTO[0,E] = 1
	$E	01	a[1,$] = reduce S → E	"$" ∈ FOLLOW(S)	GOTO / ACTION[1,$] = accept
	$S	0	accept	accept.	

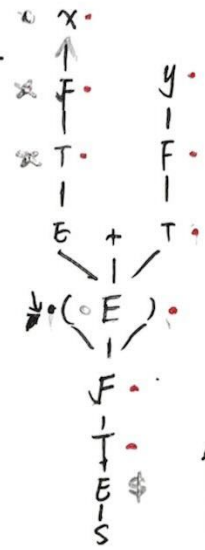

AST [x+y]$

↑ Production Rule.

LR(1)   A → α•[aβ], b   ACTION[i, b] = reduce A → α   with lookahead!

Define NFA

tag

$\boxed{A \to \alpha \cdot a\beta,\ b} \xrightarrow{a} \boxed{A \to \alpha a \cdot \beta,\ b}$

$\boxed{A \to \alpha \cdot B\beta,\ b} \xrightarrow{B} \boxed{A \to \alpha B \cdot \beta,\ b}$

add new look-ahead For each b' ∈ FIRST(βb)

$\boxed{A \to \alpha \cdot B\beta,\ b} \xrightarrow{\varepsilon} \boxed{B \to \cdot\gamma,\ b'}$

shift when b = a.

A → α•, b ∈ first(b)   Reduce A → α.
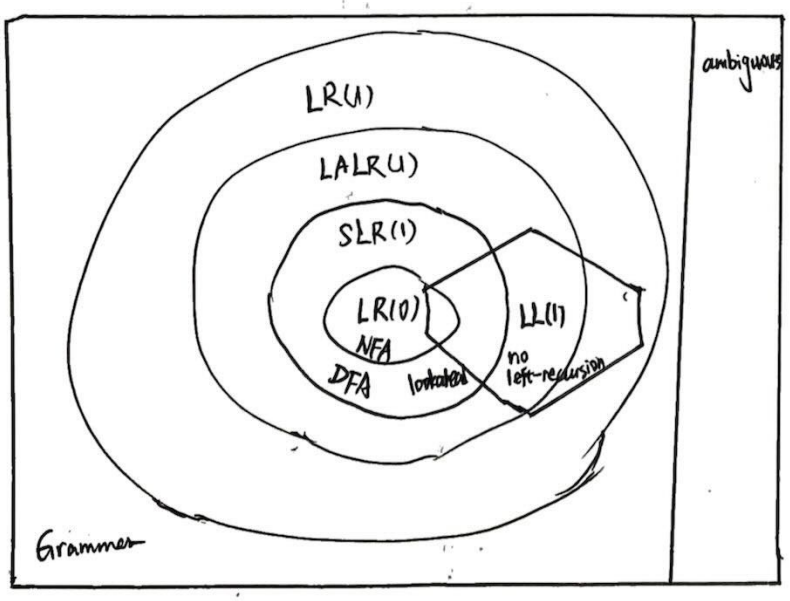
S → α•, $ Accept.