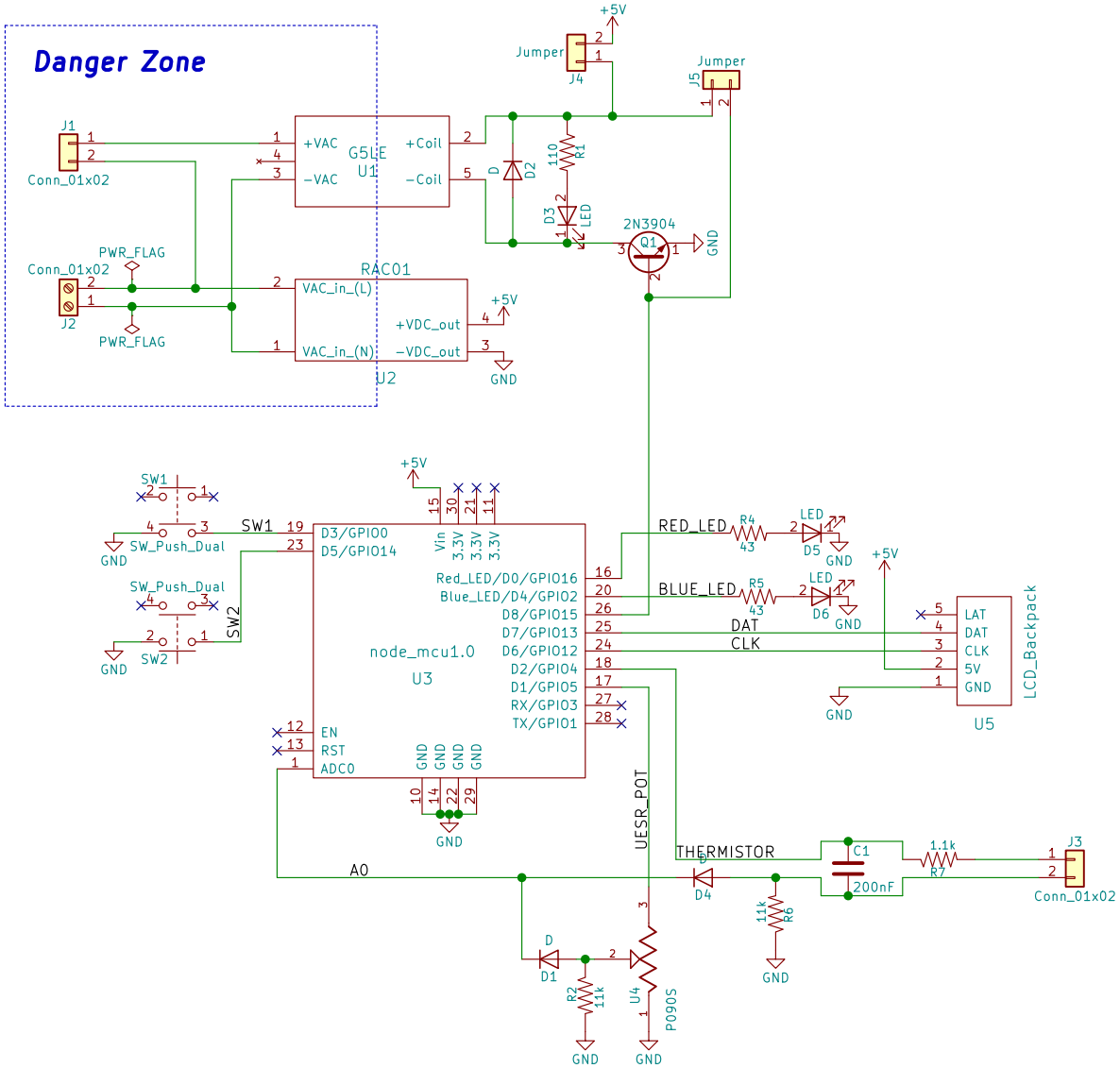

peter mitrano

Sheet: /

File: sous-vide.sch

Title: sous-vide

Size: USLetter	Date: 2017-12-28	Rev: 0.2
KiCad E.D.A. kicad 4.0.7-e2-637658ubuntu16.04.1		Id: 1/1