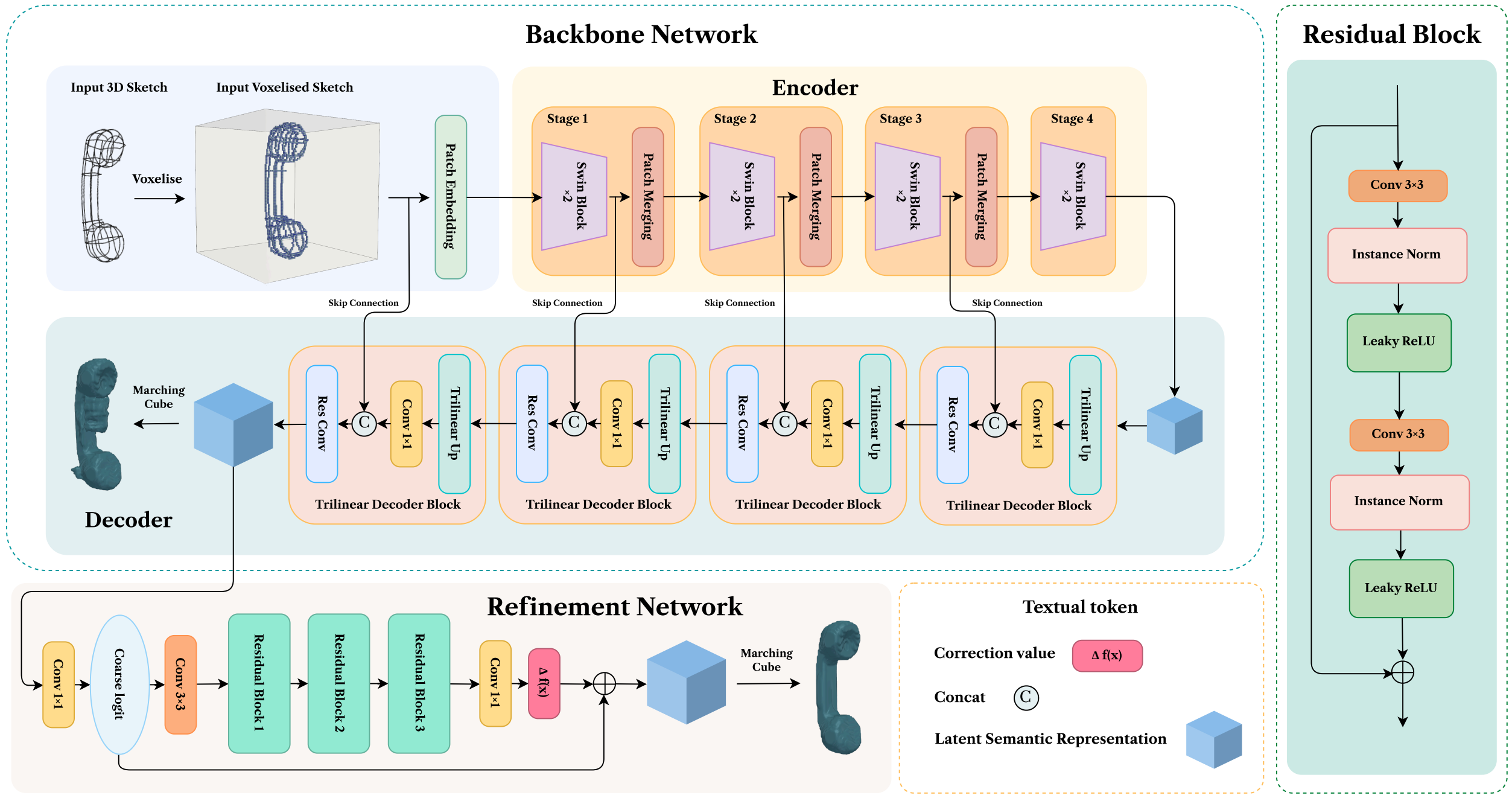
Backbone Network
Input 3D Sketch
Input Voxelised Sketch
Voxelise
Patch Embedding
Encoder
Stage 1
Stage 2
Stage 3
Stage 4
Swin Block ×2
Patch Merging
Skip Connection
Marching Cube
Decoder
Res Conv
Conv 1×1
Trilinear Up
Trilinear Decoder Block
Refinement Network
Conv 1×1
Coarse logit
Conv 3×3
Residual Block 1
Residual Block 2
Residual Block 3
Δ f(x)
Marching Cube
Textual token
Correction value
Concat
Latent Semantic Representation
Residual Block
Conv 3×3
Instance Norm
Leaky ReLU