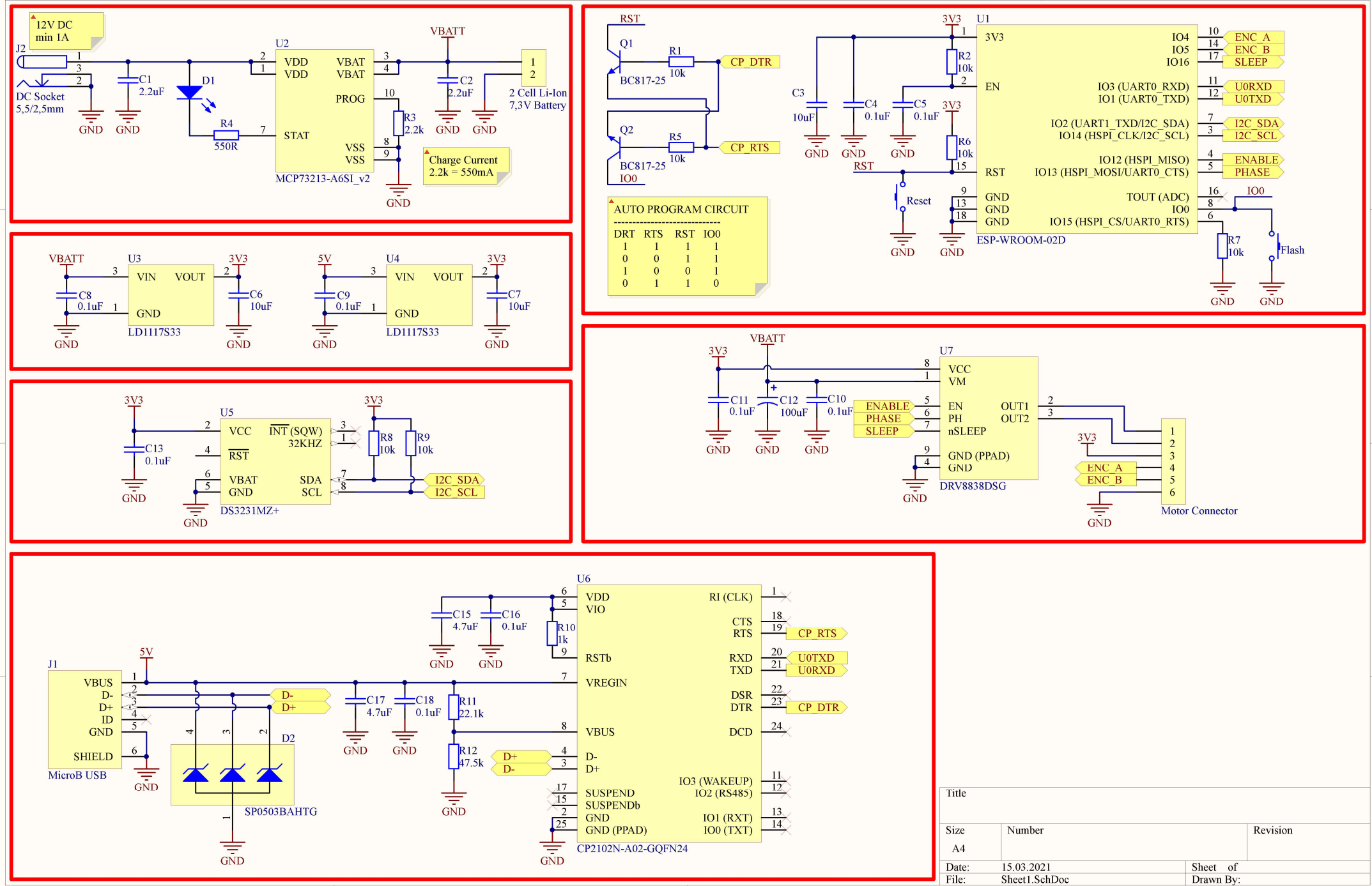
12V DC
min 1A
J2
DC Socket
5,5/2,5mm
C1
2.2uF
D1
R4
550R
U2
VDD
VDD
VBAT
VBAT
PROG
STAT
VSS
VSS
MCP73213-A6SI_v2
VBATT
C2
2.2uF
R3
2.2k
2 Cell Li-Ion
7,3V Battery
Charge Current
2.2k = 550mA
GND
RST
Q1
BC817-25
R1
10k
CP_DTR
Q2
BC817-25
IO0
R5
10k
CP_RTS
AUTO PROGRAM CIRCUIT
DRT RTS RST IO0
1 1 1 1
0 0 1 1
1 0 0 1
0 1 1 0
3V3
U1
C3
10uF
C4
0.1uF
C5
0.1uF
R2
10k
R6
10k
EN
RST
Reset
GND
GND
GND
GND
GND
GND
ESP-WROOM-02D
3V3
IO4
IO5
IO16
IO3 (UART0_RXD)
IO1 (UART0_TXD)
IO2 (UART1_TXD/I2C_SDA)
IO14 (HSPI_CLK/I2C_SCL)
IO12 (HSPI_MISO)
IO13 (HSPI_MOSI/UART0_CTS)
TOUT (ADC)
IO0
IO15 (HSPI_CS/UART0_RTS)
ENC_A
ENC_B
SLEEP
U0RXD
U0TXD
I2C_SDA
I2C_SCL
ENABLE
PHASE
IO0
R7
10k
Flash
U3
VIN
VOUT
GND
LD1117S33
C8
0.1uF
C6
10uF
5V
U4
C9
0.1uF
C7
10uF
U5
VCC
RST
VBAT
GND
INT (SQW)
32KHZ
SDA
SCL
DS3231MZ+
C13
0.1uF
R8
10k
R9
10k
U7
VCC
VM
EN
PH
nSLEEP
GND (PPAD)
GND
OUT1
OUT2
DRV8838DSG
C11
0.1uF
C12
100uF
C10
0.1uF
Motor Connector
J1
VBUS
D-
D+
ID
GND
SHIELD
MicroB USB
5V
D2
SP0503BAHTG
C17
4.7uF
C18
0.1uF
R11
22.1k
R12
47.5k
C15
4.7uF
C16
0.1uF
R10
1k
U6
VDD
VIO
RSTb
VREGIN
VBUS
D-
D+
SUSPEND
SUSPENDb
GND
GND (PPAD)
RI (CLK)
CTS
RTS
RXD
TXD
DSR
DTR
DCD
IO3 (WAKEUP)
IO2 (RS485)
IO1 (RXT)
IO0 (TXT)
CP2102N-A02-GQFN24
Title
Size
A4
Number
Revision
Date: 15.03.2021
Sheet of
File: Sheet1.SchDoc
Drawn By: