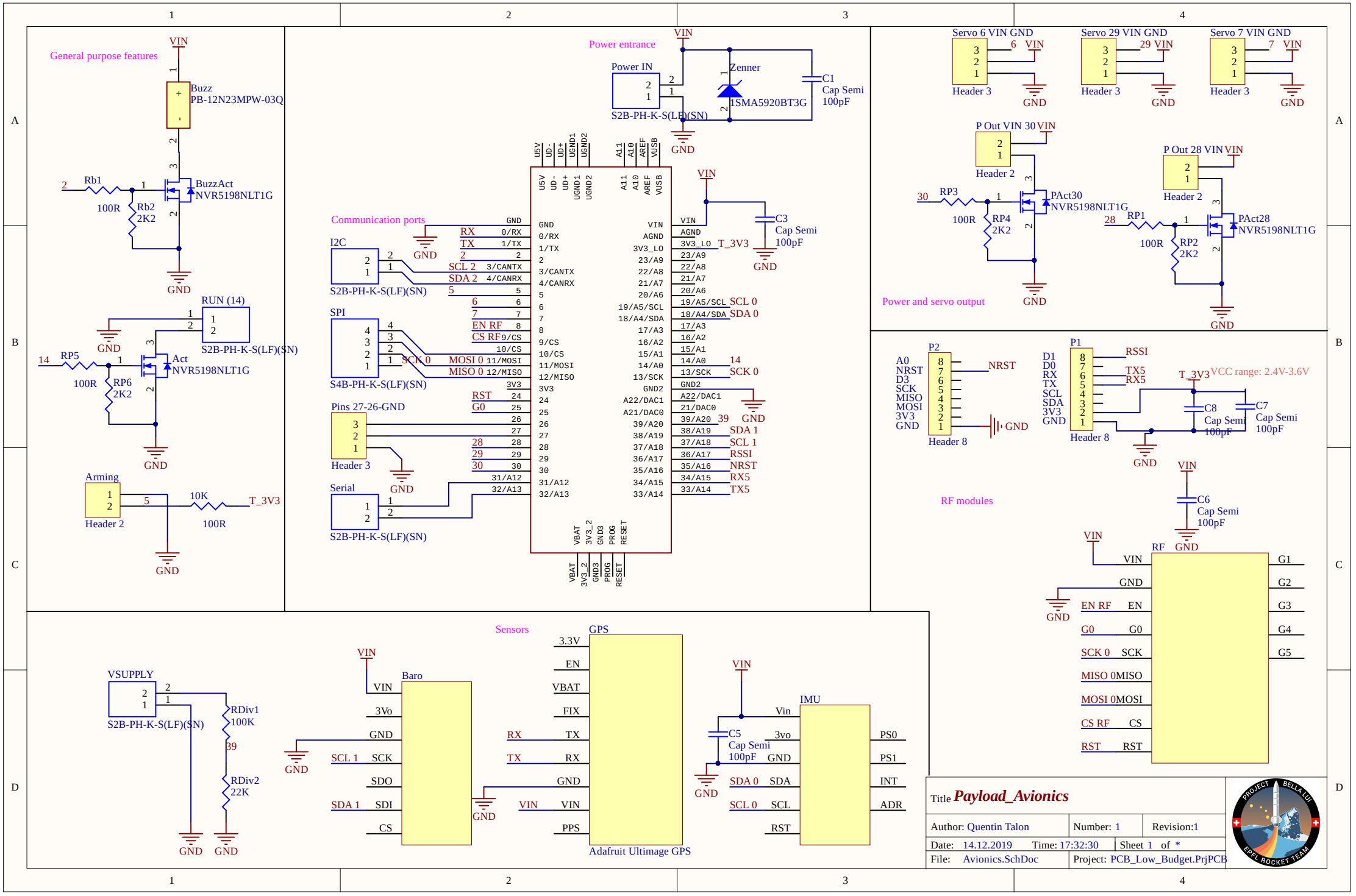
General purpose features
VIN
Buzz
PB-12N23MPW-03Q
Rb1
100R
Rb2
2K2
BuzzAct
NVR5198NLT1G
GND
RUN (14)
S2B-PH-K-S(LF)(SN)
RP5
100R
RP6
2K2
Act
NVR5198NLT1G
Arming
Header 2
10K
100R
T_3V3
Power entrance
Power IN
S2B-PH-K-S(LF)(SN)
Zenner
1SMA5920BT3G
C1
Cap Semi
100pF
Communication ports
I2C
S2B-PH-K-S(LF)(SN)
SPI
S4B-PH-K-S(LF)(SN)
Pins 27-26-GND
Header 3
Serial
S2B-PH-K-S(LF)(SN)
C3
Cap Semi
100pF
T_3V3
Servo 6 VIN GND
Servo 29 VIN GND
Servo 7 VIN GND
Header 3
P Out VIN 30 VIN
P Out 28 VIN VIN
Header 2
RP3
RP4
2K2
PAct30
NVR5198NLT1G
RP1
RP2
2K2
PAct28
NVR5198NLT1G
Power and servo output
P2
Header 8
P1
Header 8
VCC range: 2.4V-3.6V
C8
Cap Semi
100pF
C7
Cap Semi
100pF
RF modules
C6
Cap Semi
100pF
RF
Sensors
VSUPPLY
S2B-PH-K-S(LF)(SN)
RDiv1
100K
RDiv2
22K
Baro
GPS
Adafruit Ultimage GPS
IMU
C5
Cap Semi
100pF
Title Payload_Avionics
Author: Quentin Talon
Number: 1
Revision:1
Date: 14.12.2019
Time: 17:32:30
Sheet 1 of *
File: Avionics.SchDoc
Project: PCB_Low_Budget.PrjPCB
PROJECT BELLA LUI
EPFL ROCKET TEAM

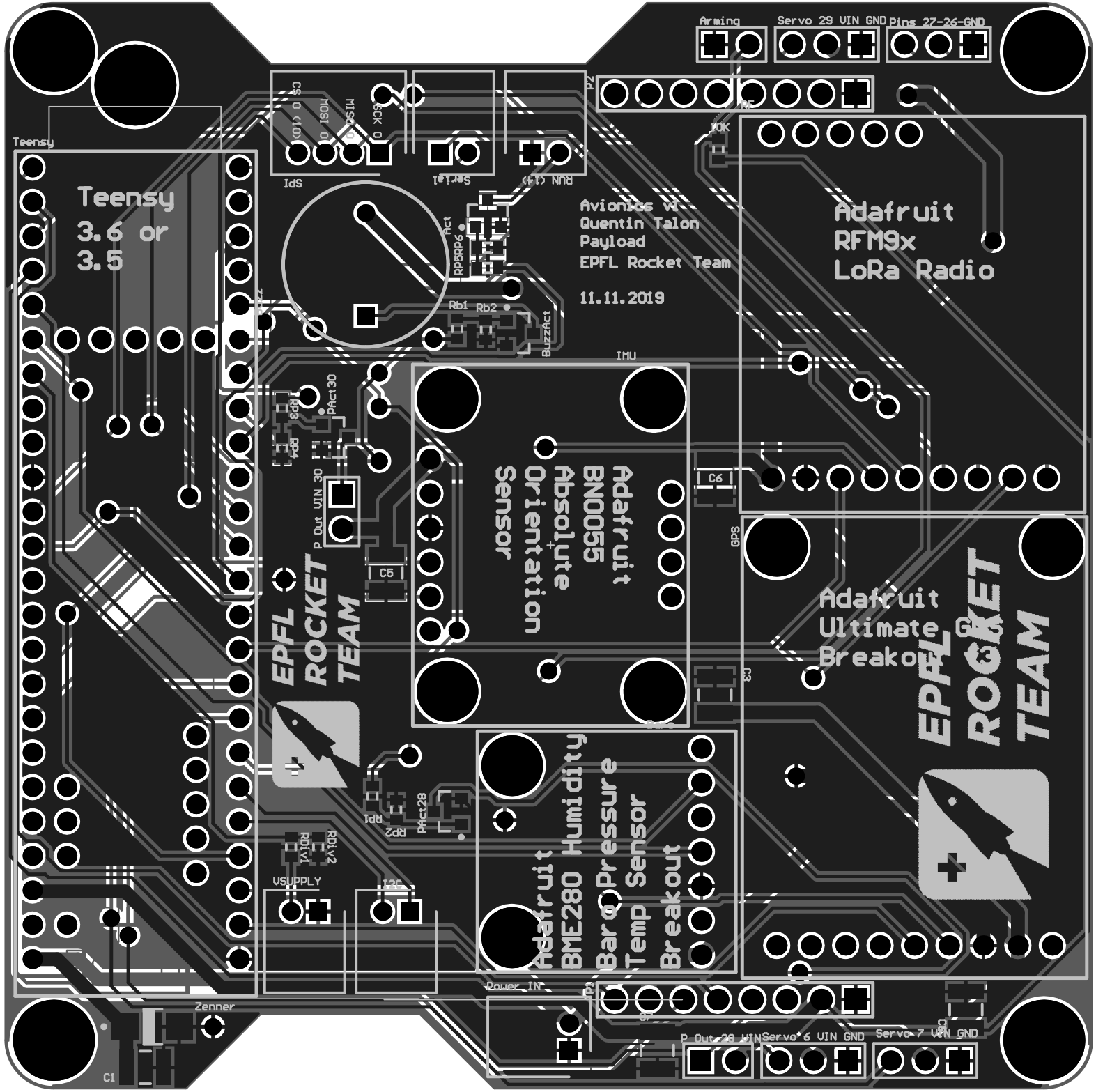
Arming
Servo 29 VIN GND
Pins 27-26-GND
Teensy
Teensy
3.6 or
3.5
CS
MOSI
MISO
SCK
SPI
Serial
RUN (14)
Avionics V1
Quentin Talon
Payload
EPFL Rocket Team
11.11.2019
Adafruit
RFM9x
LoRa Radio
IMU
Adafruit
BNO055
Absolute
Orientation
Sensor
GPS
Adafruit
Ultimate
Breakout
EPFL
ROCKET
TEAM
Adafruit
BME280 Humidity
Baro Pressure
Temp Sensor
Breakout
P Out VIN 30
VSUPPLY
I2C
Power IN
Zenner
P Out 28 VIN
Servo 6 VIN GND
Servo 7 VIN GND