Washington State Department of
Labor & Industries

WAC 296-46B Electrical Safety Standards, Administration, and Installation

State of Washington L&I Electrical Program

Exam Friendly Version

***Last update**: September 12, 2025*

Scan the QR code for the official version or visit:

https://apps.leg.wa.gov/wac/default.aspx?cite=296-46B

Electrical Program

On the Web: www.lni.wa.gov/Electrical

F500-142-000 (9-2025)

Table of Contents

PART A - NEC INSTALLATION AMENDMENTS, STANDARDS, INSPECTIONS, AND DEFINITIONS 10

WAC 296-46B-010 General. 10

Adopted standards. 10

Inspections - General. 11

Inspection move on buildings and structures. 12

Wiring methods for designated building occupancies. 13

Traffic management systems. 13

WAC 296-46B-100 General definitions. 15

WAC 296-46B-110 General requirements for electrical installations. 21

003 Examination, identification, installation, use, and listing (product certification) of equipment. 21

011 Deteriorating agents. 22

022 Identification of disconnecting means. 22

030 Over 1,000 volts - General. 22

WAC 296-46B-210 Branch circuits not over 1,000 volts ac, 1,500 volts dc nominal. 22

008(A) Dwelling units GFCI requirements. 22

008(B) Other than dwelling units - GFCI requirements. 22

011 Branch circuits. 23

013 Ground fault protection of equipment. 23

025 Common area branch circuits. 23

052 (A)(2) Dwelling unit receptacle outlets. 23

052 (C)(2) Island and peninsular countertop and work surfaces. 23

063 Equipment requiring servicing. 23

WAC 296-46B-215 Feeders. 23

002 Minimum rating and size. 23

005 Diagrams of feeders. 24

010 Ground fault protection testing. 24

WAC 296-46B-220 Branch circuit, feeder, and service calculations. 25

042 Lighting load calculations. 25

WAC 296-46B-225 Outside branch circuits and feeders. 25

019 Clearances from buildings for conductors of not over 1,000 volts, nominal. 25

031(B) Location of outside feeder disconnecting means. 25

036 Suitable for use as service equipment. 25

WAC 296-46B-230 Services. 25
001 General service requirements. 25
028 Service or other masts. 26
040 Service conductors - Two-family and multiple-occupancy buildings. 28
042 Service conductor - Size and rating. 28
043 Wiring methods for 1,000 volts, nominal or less. 28
070 Service equipment - Disconnecting means. 29
085(C) Replacements. 29
095 Ground-fault protection of equipment. 29
WAC 296-46B-235 Branch circuits, feeders, and services over 1,000 volts ac, 1,500 volts dc nominal. 29
402(B) Wiring methods. 30
WAC 296-46B-240 Overcurrent protection. 30
024(C) Not exposed to physical damage. 30
024(F) Not located over steps. 30
067(C) Performance testing. 30
087(C) Performance testing. 31
WAC 296-46B-250 Grounding and bonding. 31
028 (D)(3) Separately derived system with more than one enclosure. 31
052 Grounding electrodes. 31
053 (A)(2) Resistance of rod, pipe, and plate electrodes. 32
064 Grounding electrode conductor installation – Physical protection. 32
068 Accessibility. 32
090 Bonding. 33
104(B) Bonding - Other metal piping. 33
184 Solidly grounded neutral systems over 1,000 volts. 33
WAC 296-46B-300 General requirements for wiring methods and materials. 34
005 Underground installations. 34
011 Support of raceways, cables, or boxes in suspended ceilings. 35
017 Conductors in raceway. 35
WAC 296-46B-314 Outlet, device, pull, and junction boxes; conduit bodies; fittings; and handhole enclosures. 36
029(A) Accessibility of conduit bodies and boxes. 36
023(H) Flexible cord connection of pendant boxes. 36
027(C) Boxes at ceiling-suspended (paddle) fan outlets. 36

WAC 296-46B-334 Nonmetallic-sheathed cable. 36
010 Nonmetallic-sheathed cable. 36
015 Exposed work. 37
WAC 296-46B-336 Power and control tray cable—Type TC. 37
010 Uses permitted. 37
WAC 296-46B-358 Electrical metallic tubing. 37
012 Electrical metallic tubing. 37
WAC 296-46B-394 Concealed knob-and-tube wiring. 38
001 Knob-and-tube wiring. 38
WAC 296-46B-408 Switchboards, switchgear, and panelboards. 38
WAC 296-46B-410 Luminaires, lampholders, and lamps. 38
010 Luminaires in specific locations. 38
042 Luminaires with exposed conductive surfaces. 38
056 Protection of conductors and insulation. 38
062 Flexible cord connection of electric discharge luminaires. 38
WAC 296-46B-422 Appliances. 39
010 Water heater circuit. 39
WAC 296-46B-430 Motors, motor circuits, and controllers. 39
007 Marking on motors and multimotor equipment. 39
WAC 296-46B-450 Transformers and transformer vaults (including secondary ties). 39
027 Flammable-liquid or oil-filled transformers installed outdoors. 39
WAC 296-46B-500 Hazardous (classified) locations, Classes I, II, and III, Divisions 1 and 2. 41
005 Classification of locations. 41
WAC 296-46B-501 Class I locations. 41
001 Sewage disposal systems. 41
WAC 296-46B-505 Zone 0, 1, and 2 locations. 42
007 Implementation of zone classification. 42
WAC 296-46B-513 Aircraft hangars. 42
001 Scope. 42
WAC 296-46B-514 Motor fuel dispensing facilities. 43
001 General. 43
003 Classifications of locations. 43
011 Emergency disconnecting means - Dispensing and service stations. 43
013 Maintenance and service of dispensing equipment. 43

WAC 296-46B-517 Health care facilities. 43
001 Health care facilities. 43
013 Wiring methods. 44
017 Ground-fault protection of equipment. 44
WAC 296-46B-547 Agricultural buildings. 44
001 Scope. 44
WAC 296-46B-550 Mobile homes, manufactured homes and mobile home parks. 45
001 Mobile/manufactured homes - Inspection. 45
032 Mobile/manufactured homes - Service. 45
033 Mobile/manufactured homes - Feeder. 45
WAC 296-46B-555 Marinas, boatyards, floating buildings, and commercial and noncommercial docking facilities. 45
Floating buildings. 46
WAC 296-46B-590 Temporary installations. 46
001 Temporary installations. 46
003 Temporary installations - Time constraints. 46
004 Temporary installations - Splices. 46
WAC 296-46B-600 Electric signs and outline lighting. 47
001 Electrical signs - General. 47
004 Markings. 47
007 Grounding and bonding. 47
010 Portable or mobile outdoor electrical signs. 47
030 Neon tubing. 47
WAC 296-46B-620 Elevators, dumbwaiters, escalators, moving walks, platform lifts, and stairway chairlifts. 48
051 Disconnecting means. 48
WAC 296-46B-680 Swimming pools, fountains, and similar installations. 48
001 General. 48
070 Hydromassage bathtubs. 49
WAC 296-46B-690 Solar photovoltaic systems. 49
002 Definitions. 49
004 Installation. 49
007 Maximum voltage. 50
WAC 296-46B-692 Fuel cell systems. 50
WAC 296-46B-694 Wind electric systems. 50

WAC 296-46B-700 Emergency systems. 50
001 Emergency systems - General. 50
007 Signs. 50
010 Emergency systems - Equipment identification. 50
032 Selective coordination. 51
WAC 296-46B-701 Legally required standby systems. 51
007 Signs. 51
032 Selective coordination. 51
WAC 296-46B-702 Optional standby systems. 51
007 Signs. 51
WAC 296-46B-705 Interconnected electric power production sources. 51
011 Supply side source connections. 51
WAC 296-46B-710 Standalone systems. 52
WAC 296-46B-760 Fire alarm systems. 52
WAC 296-46B-800 General requirements for communications systems. 52
001 Installation. 52
002 Definitions. 54
PART B - ELECTRICAL PLAN REVIEW 54
WAC 296-46B-900 Electrical plan review. 54
Definition of occupancies 54
Plan review for educational, institutional, or health care facilities/buildings. 56
PART C - PERMITS AND FEES 59
WAC 296-46B-901 General—Electrical work permits and fees. 59
General. 59
Permit - Responsibility for 59
Permit - Requirements for. 60
Inspection and approval. 62
Permit - Duration/refunds. 62
Permit - Annual telecommunications. 63
Permit - Annual electrical 63
Permit - Temporary construction project installations 63
Posting of corrections. 64
WAC 296-46B-902 Equipment standards approval, city ordinances. 64
Evaluation engineers, testing laboratories, and equipment standards 64
WAC 296-46B-903 Equipment standards. 64

General. 64
Industrial control panel and industrial utilization equipment inspection. 65
WAC 296-46B-906 Inspection fees 67
PART D - PROVISIONAL PERMITS. 72
WAC 296-46B-907 Provisional permits. 72
Provisional electrical work permit - Use/duration/refunds. 72
PART E - CLASS B PERMITS 72
WAC 296-46B-908 Class B permits. 72
Class B electrical work permit - Use. 72
PART F – ADMINISTRATIVE 75
WAC 296-46B-909 Electrical/telecommunications contractor's license, administrator certificate and examination, master electrician certificate and examination, electrician certificate and examination, copy, and miscellaneous fees 75
WAC 296-46B-911 Electrical testing laboratory and engineer accreditation fees. 78
WAC 296-46B-915 Civil penalty schedule. 78
WAC 296-46B-920 Electrical/telecommunications license/certificate types and scope of work. 82
WAC 296-46B-925 Electrical/telecommunications contractor's license. 91
General. 91
Electrical/telecommunications contractor bond, cash or securities deposit. 92
Telecommunications contractor insurance. 92
Electrical/telecommunications contractor exemptions. 92
Exemptions - Electrical utility and electrical utility's contractor. 94
Exemptions - Electrical utility telecommunications transition equipment installations, maintenance and repair. 95
Exemptions - Independent electrical power production equipment exemption. 96
Exemptions - Telegraph and telephone utility and telegraph and telephone utility's contractor. 97
Exemptions - Manufacturers of electrical/telecommunications products. 97
Premanufactured electric power generation equipment assemblies and control gear. 98
Photovoltaic equipment. 99
Submersible well pump installers. 99
WAC 296-46B-930 Assignment—Administrator or master electrician. 99
WAC 296-46B-935 Administrator certificate. 99
General. 99
Qualifying for examination. 99

Original - Administrator certificates. 100
Combination - Specialty administrator certificate. 100
Renewal - Administrator certificate. 100
WAC 296-46B-940 Electrician/certificate of competency required. 101
General. 101
Electrician - Certificate of competency required. 101
Original certificates of competency. 102
Renewal - Master electrician, journey level, and specialty electrician certificates of competency. 103
Exemptions - Lineworker. 103
Exemptions - Plumbers. 104
Exemptions – Submersible well pump installers. 104
Reciprocal agreements between Washington and other states. 104
WAC 296-46B-942 Training certificate required. 105
General. 105
Original training certificates. 105
Specialty specific - Zero percent and 75 percent supervision modified training certificates. 105
Renewal of training certificates. 106
Trainees without supervision present on the job site. 107
Trainees seeking a journey level electrician certificate - Working with no supervision. 108
Trainees seeking certain specialty electrician certificates - Working with reduced or no supervision. 108
WAC 296-46B-945 Qualifying for master, journey level, specialty electrician examinations. 108
Qualifying for the master electrician examination. 108
Qualifying for the master electrician examination from out-of-state. 108
Qualifying for the journey level electrician competency examination. 109
Qualifying for a specialty electrician certificate of competency or examination. 110
General - Qualifying hours gained by applicants seeking work experience credit without a Washington electrician training certificate. 112
Training school credit. 112
Qualifying for the journey level/specialty electrician competency examination when work was performed in a state requiring electrician certification for the work performed. 112
Qualifying for the journey level/specialty electrician competency examination when work was performed in a state that does not require electrician certification for the work performed. 113

Military experience. 113
Experience in another country. 113
WAC 296-46B-960 Administrator and electrician certificate of competency examinations. 114
General. 114
Special accommodations for examination. 115
Failed examination appeal procedures. 115
Failing an administrator certificate exam or electrician certificate of competency examination. 116
Cheating on an examination. 116
Examination confidentiality. 116
WAC 296-46B-970 Continuing education and classroom education requirements. 116
WAC 296-46B-971 Training schools. 123
WAC 296-46B-975 Electrical audit. 125
General. 125
Trainee hours. 125
Administrator/master electrician - status. 126
WAC 296-46B-980 Enforcement—Installations, licensing, and certification requirements. 126
WAC 296-46B-985 Penalties for false statements or material misrepresentations. 127
WAC 296-46B-990 Failure to comply with the electrical contractor licensing, administrator certification, or electrician certification laws. 127
General. 127
Suspension or revocation - Of an electrical contractor's license, administrator's certificate, master electrician's certificate of competency, electrician's certificate of competency, or training certificate. 127
Confiscation - Of an electrical contractor's license, administrator certificate, electrician certificate of competency, or training certificate. 129
WAC 296-46B-995 Electrical board—Appeal rights and hearings. 129
General. 129
Appeals. 129
Appearance and practice before board. 132
WAC 296-46B-997 Engineer approval. 132
Accreditation - General. 133
Suspension or revocation. 134
Business structure, practices, and personnel. 134
Recordkeeping and reporting - General. 135

WAC 296-46B-999 Electrical testing laboratory requirements. 136
General. 136
Accreditation - General. 136
Suspension or revocation. 138
Business structure, practices, and personnel. 138
Recordkeeping and reporting - General. 140
Recordkeeping and reporting - Certification. 140
Recordkeeping and reporting - Field evaluation. 141
Facilities and equipment. 141
Standards. 142
Product certification. 142
Certification laboratory/manufacturer - Agreement. 142
Certification mark. 143
Certification laboratory product - Assurance/follow up. 143
Field evaluation - Requirements. 144
Field evaluation mark. 145

PART A - NEC INSTALLATION AMENDMENTS, STANDARDS, INSPECTIONS, AND DEFINITIONS

WAC 296-46B-010 General.

Adopted standards.

(1) The 2023 edition of the National Electrical Code (NFPA 70 - 2023) published September, 2023 including Annex A, B, C, and subsequent Errata and Tentative Interim Amendments issued by the National Fire Protection Association; the latest published versions of Commercial Building Telecommunications Cabling Standard (ANSI/TIA-568); Commercial Building Standard for Telecommunications Pathway and Spaces (ANSI/TIA-569); Commercial Building Grounding and Bonding Requirements for Telecommunications (ANSI/TIA-607); Residential Telecommunications Cable Standard (ANSI/TIA-570); and the latest published version of the National Electrical Safety Code (NESC excluding Appendixes A and B) are hereby adopted by reference as part of this chapter.

This chapter will be followed where there is any conflict between this chapter and the above adopted standards.

The National Electrical Code will be followed where there is any conflict between the National Electrical Code and, ANSI/TIA 568, ANSI/TIA 569, ANSI/TIA 607, ANSI/TIA/570, or the NESC.

Adopted standards apply to installations when issue dates of electrical permits are on and after adoption dates of standards except for:

(a) New one- and two-family dwellings, or multifamily dwellings where the issue date of building permits for the premises is before the adoption date of standards; or

(b) New installations where plan review is required by WAC 296-46B-900 when plans are received and accepted for review before the adoption date of standards.

Inspections - General.

(2) Electrical inspectors will give information as to the interpretation or application of the standards in this chapter, but will not lay out work or act as consultants for contractors, owners, or users.

(3) A variance from the electrical installation requirements of chapter 19.28 RCW or this chapter may be granted by the department or the city that has electrical inspection jurisdiction when it is assured that equivalent objectives can be achieved by establishing and maintaining effective safety.

(a) Any electrical permit holder may request a variance.

(b) The permit holder must make the request in writing, using a form provided by the department, to the chief electrical inspector or to the city that has electrical inspection jurisdiction. The request must include:

(i) A description of the installation as installed or proposed;

(ii) A detailed list of the applicable code violations;

(iii) A detailed list of safety violations;

(iv) A description of the proposal for meeting equivalent objectives for code and/or safety violations; and

(v) Appropriate variance application fee as listed in chapter 296-46B WAC, Part C.

(4) Electrical wiring or equipment subject to this chapter must be sufficiently accessible, at the time of inspection, to allow the inspector to visually inspect the installation to verify conformance with the NEC and any other electrical requirements of this chapter with the exception of not more than eight feet of electrical conduit in a foundation of a one- or two-family dwelling or residential outbuilding for use as service entrance raceway.

(5) All required equipment grounding conductors installed in concealed cable or flexible conduit systems must be completely installed and made up at the time of the rough-in cover inspection.

(6) The installation of all structural elements and mechanical systems (e.g., framing, plumbing, ducting, etc.) must be complete in the area(s) where electrical inspection is requested. Prior to completion of an exterior wall cover inspection, either:

(a) The exterior shear panel/sheathing nail inspection must be completed by the building code inspector and, where siding nails or fasteners which penetrate into the wall cavity are to be used, all siding must be installed; or

(b) All wiring and device boxes must be a minimum of 2 1/2 inches from the exterior surface of the framing member; or

(c) All wiring and device boxes must be protected by a steel plate a minimum of 1/16 inch thick and of appropriate width and height installed to cover the area of the wiring or box.

(7) In order to meet the minimum electrical safety standards for installations, all materials, devices, appliances, and equipment, not exempted in chapter 19.28 RCW, must conform to applicable electrical product standards recognized by the department, be listed, or

field evaluated. For any equipment that requires an amusement operating permit under chapter 67.42 RCW, the operating permit is prima facie evidence of an appropriate standard. Other than as authorized by the chief electrical inspector or a city authorized to do electrical inspection, equipment must not be energized until such standards are met.

(8) The state department of transportation is recognized as the inspection authority for telecommunications systems installations within the rights of way of state highways provided the department of transportation maintains and enforces an equal, higher or better standard of construction, and of materials, devices, appliances, and equipment than is required for telecommunications systems installations by chapter 19.28 RCW and this chapter.

Inspection move on buildings and structures.

(9) All buildings or structures relocated into or within the state:

(a) Other than residential, wired inside the United States (U.S.) must be inspected to ensure compliance with current requirements of chapter 19.28 RCW and the rules developed by the department.

(b) Wired outside the U.S. or Canada must be inspected to ensure compliance with all current requirements of chapter 19.28 RCW and the rules developed by the department.

(10) Residential buildings or structures wired in the U.S., to NEC requirements, and moved into or within a county, city, or town must be inspected to ensure compliance with the NEC requirements in effect at the time and place the original wiring was made. The building or structure must be inspected to ensure compliance with all current requirements of chapter 19.28 RCW and the rules developed by the department if:

(a) The original occupancy classification of the building or structure is changed as a result of the move; or

(b) The building or structure has been substantially remodeled or rehabilitated as a result of the move.

(11) Residential buildings or structures wired in Canada to Canadian Electrical Code (CEC) standards and moved into or within a county, city, or town, must be inspected to ensure compliance with the following minimum safety requirements:

(a) Service, service grounding, and service bonding must comply with the current chapter 19.28 RCW and rules adopted by the department.

(b) Canadian Standards Association (CSA) listed Type NMD cable is allowed with the following qualifications:

(i) CSA listed Type NMD cable, American Wire Gauge #10 and smaller installed after 1964 utilizing an equipment grounding conductor smaller than the phase conductors, must be:

(A) Replaced with a cable utilizing a full-size equipment grounding conductor; or

(B) Protected by a ground fault circuit interrupter protection device.

(ii) CSA listed Type NMD cable, #8 AWG and larger, must:

(A) Utilize an equipment grounding conductor sized according to the requirements of the NEC in effect at the time of the installation;

(B) Be protected by a ground fault circuit interrupter protection device; or

(C) Be replaced.

(c) Other types of wiring and cable must be:

(i) Replaced with wiring listed or field evaluated in accordance with U.S. standards by a laboratory approved by the department; or

(ii) Protected by a ground fault circuit interrupter protection device and arc fault circuit protection device.

(d) Equipment, other than wiring or panelboards, manufactured and installed prior to 1997 must be listed and identified by laboratory labels approved by the department or CSA labels.

(e) All panelboards must be listed and identified by testing laboratory labels approved by the department with the following qualifications:

(i) CSA listed panelboards labeled "suitable for use as service equipment" will be considered to be approved as "suitable for use only as service equipment."

(ii) CSA listed panelboards used as panelboards as described in the NEC, must meet all current requirements of the NEC and this chapter.

(f) Any wiring or panelboards replaced or changed as a result of the move must meet current requirements of chapter 19.28 RCW and this chapter.

(g) The location, type, and ground fault circuit interrupter protection of receptacles and equipment in a bathroom, kitchen, basement, garage, or outdoor area must meet the Washington requirements in effect at the time the wiring was installed.

(h) 4, 15-ampere, kitchen small appliance circuits will be accepted in lieu of two, 20-ampere, kitchen small appliance circuits. Receptacles will not be required to be added on kitchen peninsular or island counters.

(i) Spacing requirements for all other receptacles must meet the Washington requirements in effect at the time the wiring was installed.

(j) Receptacles installed above baseboard or fixed wall space heaters must be removed and the outlet box covered with a blank cover. The receptacle is required to be relocated as closely as possible to the existing location.

(k) Lighting outlet and switch locations must meet the Washington requirements in effect at the time the wiring was installed.

(l) Dedicated 20-ampere small appliance circuits are not required in dining rooms.

(m) Electric water heater branch circuits must be adequate for the load.

(n) The location, type, and circuit protection of feeders must meet the Washington requirements in effect at the time the wiring was installed.

Wiring methods for designated building occupancies.

(12) Wiring methods in educational or institutional facilities as defined in this chapter must be metallic or nonmetallic raceways, MI, MC, or AC cable. Places of assembly located within these facilities must comply with NEC 518.4(A) and (B).

(13) Assisted living facility generator systems may be wired and installed per NEC 517.

(14) Lawfully installed existing electrical installations that do not comply with the provisions of this chapter and remain in compliance with the code at the time of the installation, will be permitted to be continued without change (i.e., without circuitry or occupancy change). Additions, alterations, modifications, or repairs to the electrical system must conform to the current requirements of this chapter.

Traffic management systems.

(15) The department or city authorized to do electrical inspections will perform the electrical inspection and acceptance of traffic management systems within its jurisdiction. A traffic management system includes:

(a) Traffic illumination systems;

(b) Traffic signal systems;

(c) Traffic monitoring systems;

(d) The electrical service cabinet and all related components and equipment installed on the load side of the service cabinet supplying electrical power to the traffic management system; and

(e) Signalization system(s) necessary for the operation of a light rail system.

A traffic management system can provide signalization for controlling vehicular traffic, pedestrian traffic, or rolling stock.

(16) The department or city authorized to do electrical inspections recognizes that traffic signal conductors, pole and bracket cables, signal displays, traffic signal controllers/cabinets and associated components used in traffic management systems are acceptable for the purpose of meeting the requirements of chapter 19.28 RCW provided they conform with the following standards or are listed on the Washington state department of transportation (WSDOT) qualified products list.

(a) WSDOT/APWA standard specifications and plans;

(b) WSDOT *Design Manual*;

(c) International Municipal Signal Association (IMSA);

(d) National Electrical Manufacturer's Association (NEMA);

(e) Federal Standards 170/Controller Cabinets;

(f) Manual for *Uniform Road, Bridge, and Municipal Construction*;

(g) Institute of Transportation Engineers (ITE); or

(h) Manual of *Uniform Traffic Control Devices (MUTCD)*.

(17) Associated induction detection loop or similar circuits will be accepted by the department or city authorized to do electrical inspections without inspection.

(18) For the licensing requirements of chapter 19.28 RCW, jurisdictions will be considered owners of traffic management systems when doing electrical work for another jurisdiction(s) under a valid interlocal agreement, as permitted by chapter 39.34 RCW. Interlocal agreements for traffic management systems must be filed with the department or city authorized to do electrical inspections prior to work being performed for this provision to apply.

(19) Jurisdictions, with an established electrical inspection authority, and WSDOT may perform electrical inspection on their rights of way for each other by interlocal agreement. They may not perform electrical inspection on other rights of way except as allowed in chapter 19.28 or 39.34 RCW.

(20) Underground installations.

(a) In other than open trenching, raceways will be considered "fished" according to the NEC and do not require visual inspection.

(b) The department or city authorized to do electrical inspections will conduct inspections in open trenching within its jurisdiction. The electrical work permit purchaser must coordinate the electrical inspection. A written request (e.g., letter, email, fax, etc.) for inspection, made to the department or city authorized to do electrical inspections office having the responsibility to perform the inspection, must be made a minimum of two working days prior to the day inspection is needed (e.g., two working days 10:00 a.m. Tuesday request for a 10:00 a.m. Thursday inspection, excluding holidays and weekends).

If, after proper written request, the department or city authorized to do electrical inspections fails to make an electrical inspection at the time requested, underground conduit

may be covered after inspection by the local government jurisdiction's project inspector/designee. Written documentation of a local government jurisdiction inspection must be provided to the department or city authorized to do electrical inspections when requested. Written documentation will include:

(i) Date and time of inspection;

(ii) Location;

(iii) Installing firm;

(iv) Owner;

(v) Type of conduit;

(vi) Size of conduit;

(vii) Depth of conduit; and

(viii) Project inspector/designee name and contact information.

(21) Identification of traffic management system components. Local government jurisdictions or WSDOT may act as the certifying authority for the safety evaluation of all components.

(a) An electrical service cabinet must contain only listed components. The electrical service cabinet enclosure is not required to be listed but will conform to the standards in subsection (16) of this section.

(b) The local government jurisdiction must identify, as acceptable, the controller cabinet or system component(s) with an identification plate. The identification plate must be located inside the cabinet and may be attached with adhesive.

(22) Conductors of different circuits in same cable, enclosure, or raceway. All traffic management system circuits will be permitted to occupy the same cable, enclosure, or raceway without regard to voltage characteristics, provided all conductors are insulated for the maximum voltage of any conductor in the cable, enclosure, or raceway.

WAC 296-46B-100 General definitions.

All definitions listed in the National Electrical Code and chapter 19.28 RCW are recognized in this chapter unless other specific definitions are given in this chapter and chapter 19.28 RCW. The definitions in this section apply to all parts of this chapter. Some sections may have definitions specific to that section.

"Accreditation" is a determination by the department that a laboratory meets the requirements of this chapter and is therefore authorized to evaluate electrical products that are for sale in the state of Washington.

"Administrative law judge" means an administrative law judge (ALJ) appointed pursuant to chapter 34.12 RCW and serving in board proceedings pursuant to chapter 19.28 RCW and this chapter.

"ANSI" means American National Standards Institute. Copies of ANSI standards are available from the National Conference of States on Building Codes and Standards, Inc.

"Appeal" is a request for review of a department action by the board as authorized by chapter 19.28 RCW.

"Appellant" means any person, firm, partnership, corporation, or other entity that has filed an appeal or request for board review.

"Appliance" means household appliance.

"ASTM" means the American Society for Testing and Materials. Copies of ASTM documents are available from ASTM International.

"AWG" means American Wire Gauge.

"Basement" means that portion of a building that is partly or completely below grade plane. A basement will be considered as a story above grade plane and not a basement where the finished surface of the floor above the basement is:

(a) More than six feet above grade plane;

(b) More than six feet above the finished ground level for more than 50 percent of the total building perimeter; or

(c) More than 12 feet above the finished ground level at any point. Also see "mezzanine" and "story."

"Board" means the electrical board established and authorized under chapter 19.28 RCW.

"Category list" is a list of manufacturing safety standards or product types determined by the department.

A "certified electrical product" is an electrical product to which a laboratory, accredited by the state of Washington, has the laboratory's certification mark attached.

A "certification mark" is a specified laboratory label, symbol, or other identifying mark that indicates the manufacturer produced the product in compliance with appropriate standards or that the product has been tested for specific end uses.

"Certificate of competency" includes the certificates of competency for master journey level electrician, master specialty electrician, journey level, and specialty electrician.

A laboratory "certification program" is a specified set of testing, inspection, and quality assurance procedures, including appropriate implementing authority, regulating the evaluation of electrical products for certification marking by an electrical products certification laboratory.

A "complete application" includes the submission of all appropriate fees, documentation, and forms.

"Chapter" means chapter 296-46B WAC unless expressly used for separate reference.

"Construction," for the purposes of chapter 19.28 RCW, means electrical construction.

"Coordination (selective)" as defined in NEC 100 must be determined and documented by a professional engineer registered under chapter 18.43 RCW.

"Department" means the department of labor and industries of the state of Washington.

"Director" means the director of the department, or the director's designee.

"Egress - Unobstructed (as applied to NEC 110.26 (C)(2)(a))" means an egress path that allows a worker to travel to the exit from any other area in the room containing the equipment described in NEC 110.26 (C)(2) without having to pass through that equipment's required working space.

"Electrical equipment" includes electrical conductors, conduit, raceway, apparatus, materials, components, and other electrical equipment not exempted by RCW 19.28.006(9). Any conduit/raceway of a type listed for electrical use is considered to be electrical equipment even if no wiring is installed in the conduit/raceway at the time of the conduit/raceway installation.

An "electrical products certification laboratory" is a laboratory or firm accredited by the state of Washington to perform certification of electrical products.

An "electrical products evaluation laboratory" is a laboratory or firm accredited by the state of Washington to perform on-site field evaluation of electrical products for safety.

An "equivalent apprenticeship program" for the purposes of RCW 19.28.161 (2)(a)(i), means one that is party to a reciprocal agreement recognized by the Washington state apprenticeship and training council (WSATC) under WAC 296-05-011(3).

"Field evaluated" means an electrical product to which a field evaluation mark is attached. Field evaluation must include job site inspection unless waived by the department, and may include component sampling and/or laboratory testing.

"Field evaluation mark" is a specified laboratory label, symbol, or other identifying mark indicating the manufacturer produced the product in essential compliance with appropriate standards or that the product has been evaluated for specific end uses.

A "field evaluation program" is a specified set of testing, inspection, and quality assurance procedures, including appropriate implementing authority regulating the testing and evaluation of electrical products for field evaluation marking.

The "filing" is the date the document is actually received in the office of the chief electrical inspector.

"Final judgment" means any money that is owed to the department under this chapter, including fees and penalties, or any money that is owed to the department as a result of an individual's or contractor's unsuccessful appeal of a citation.

"Fished wiring" is when cable or conduit is installed within the finished surfaces of an existing building or building structure (e.g., wall, floor or ceiling cavity).

"Household appliance" means utilization equipment installed in a dwelling unit that is built in standardized sizes or types and is installed or connected as a unit to perform one or more household functions such as food preparation, cooking, and cleaning. Includes appliances typically installed in a dwelling unit kitchen, clothes washing, drying, and water heating appliances, portable room air conditioning units and portable heaters, etc. Fixed electric space-heating equipment covered in NEC 424 (furnaces, baseboard and wall heaters, electric heat cable, etc.) and fixed air-conditioning/heat pump equipment (NEC 440) are not household appliances. Household appliance does not mean any utilization equipment that:

(a) Supplies electrical power, other than Class 2, to other utilization equipment; or

(b) Receives electrical power, other than Class 2, through other utilization equipment.

HVAC/refrigeration specific definitions:

(a) "HVAC/refrigeration" means heating, ventilation, air conditioning, and refrigeration.

(b) "HVAC/refrigeration component" means electrical power and limited energy components within the "HVAC/refrigeration system," including, but not limited to: Pumps, compressors, motors, heating coils, controls, switches, thermostats, humidistats, low-voltage damper controls, outdoor sensing controls, outside air dampers, stand-alone duct smoke detectors, air monitoring devices, zone control valves and equipment for monitoring of HVAC/refrigeration control panels and low-voltage connections. This definition excludes equipment and components of non-"HVAC/refrigeration control systems."

(c) "HVAC/refrigeration control panel" means an enclosed, manufactured assembly of electrical components designed specifically for the control of a HVAC/refrigeration system. Line voltage equipment that has low voltage, NEC Class 2 control or monitoring components incidental to the designed purpose of the equipment is not an HVAC/refrigeration control panel (e.g., combination starters).

(d) "HVAC/refrigeration control system" means a network system regulating and/or monitoring a HVAC/refrigeration system. Equipment of a HVAC/refrigeration control system

includes, but is not limited to: Control panels, data centers, relays, contactors, sensors, and cables related to the monitoring and control of a HVAC/refrigeration system(s).

(e) "HVAC/refrigeration equipment" means the central unit primary to the function of the "HVAC/refrigeration system." HVAC/refrigeration includes, but is not limited to: Heat pumps, swamp coolers, furnaces, compressor packages, and boilers.

(f) "HVAC/refrigeration system" means a system of HVAC/refrigeration: Wiring, equipment, and components integrated to generate, deliver, or control heated, cooled, filtered, refrigerated, or conditioned air. This definition excludes non-HVAC/refrigeration control systems (e.g., fire alarm systems, intercom systems, building energy management systems, and similar non-HVAC/refrigeration systems).

"IBC" means the International Building Code. Copies of the IBC are available from the International Code Council.

An "individual" or "party" or "person" means an individual, firm, partnership, corporation, association, government subdivision or unit thereof, or other entity.

An "installation" includes the act of installing, connecting, repairing, modifying, or otherwise performing work on an electrical system, component, equipment, or wire except as exempted by WAC 296-46B-925. An installation is not the passive testing or operational programming of an electrical system, component, equipment, or wire. See "passive testing."

An "identification plate" is suitable for the environment and is a printed or etched adhesive label approved by the department or a phenolic or metallic plate or other similar material engraved in block letters at least 1/4 inch high unless specifically required to be larger by this chapter, suitable for the environment and application. The letters and the background must be in contrasting colors. Screws, rivets, permanent adhesive, or methods specifically described in this chapter must be used to affix an identification plate to the equipment or enclosure.

"Job site" means a specific worksite having a single address or specific physical location (e.g., a single-family residence, a building, a structure, a marina, an individual apartment building with a specific address, etc.).

"Journey level electrician" means a person who has been issued a journey level electrician certificate of competency by the department. The terms "journey level" and "journeyperson" in chapter 19.28 RCW are synonymous.

"Labeled" means an electrical product that bears a certification mark issued by a laboratory accredited by the state of Washington.

A "laboratory" may be either an electrical product(s) certification laboratory or an electrical product(s) evaluation laboratory.

A "laboratory operations control manual" is a document to establish laboratory operation procedures and may include a laboratory quality control manual.

"License" means a license required under chapter 19.28 RCW.

"Like-in-kind" means having the same overcurrent protection requirements and similar characteristics such as voltage requirement, current draw, short circuit characteristics, and function within the system and being in the same location. Like-in-kind also includes any equipment component authorized by the manufacturer as a suitable component replacement part.

For the purpose of WAC 296-46B-940, a "lineworker" is a person employed by a serving electrical utility or employed by a licensed general electrical contractor who carries, on their person, evidence that they:

(a) Have graduated from a department-approved lineworker's apprenticeship course; or

(b) Are currently registered in a department-approved lineworker's apprenticeship course and are working under the direct 100 percent supervision of a journey level electrician or a graduate of a lineworker's apprenticeship course approved by the department. The training received in the lineworker's apprenticeship program must include training in applicable articles of the currently adopted National Electrical Code.

"Listed" means equipment has been listed and identified by a laboratory approved by the state of Washington for the appropriate equipment standard per this chapter.

"Low voltage" means:

(a) NEC, Class 1 power limited circuits at 30 volts maximum.

(b) NEC, Class 2 circuits powered by a Class 2 power supply as defined in NEC 725.60(A).

(c) NEC, Class 3 circuits powered by a Class 3 power supply as defined in NEC 725.60(A).

(d) Circuits of telecommunications systems as defined in chapter 19.28 RCW.

"Member of the firm" means the member(s) on file with the department of licensing for sole proprietorships/partnerships or with the secretary of state for corporations.

"Mezzanine" is the intermediate level or levels between the floor and ceiling of any story with an aggregate floor area of not more than one-third of the area of the room or space in which the level or levels are located. Also see "basement" and "story."

"NEC" means National Electrical Code. Copies of the NEC are available from the National Fire Protection Association.

"NEMA" means National Electrical Manufacturer's Association. Copies of NEMA standards are available from the National Electrical Manufacturer's Association.

"NESC" means National Electrical Safety Code. Copies of the NESC are available from the Institute of Electrical and Electronics Engineers, Inc.

"NETA" means International Electrical Testing Association, Inc. Copies of the NETA standards and information are available from the International Electrical Testing Association, Inc.

"NFPA" means the National Fire Protection Association. Copies of NFPA documents are available from the National Fire Protection Association.

"NRTL" means Nationally Recognized Testing Laboratory accredited by the federal Occupational Safety and Health Administration (OSHA) after meeting the requirements of 29 C.F.R. 1910.7.

A "new building" for the purposes of RCW 19.28.261 includes the setting of a manufactured, mobile, or modular building.

"Passive testing" (e.g., pressing of test buttons, use of testing equipment like voltage testers, clamp-on meters, removal of a device head where the wiring is terminated on a separate base plate, etc.) means testing that does not require any:

(a) Physical modification to the electrical system wiring; or

(b) Wiring to be disconnected or terminated, except as necessary for an approved electrical testing laboratory or approved engineer performing an equipment evaluation.

"Point of contact" or "point of connection" means the service point.

"Proceeding" means any matter regarding an appeal before the board including hearings before an administrative law judge.

"Public area or square" is an area where the public has general, clear, and unrestricted access.

A "quality control manual" is a document to maintain the quality control of the laboratory's method of operation. It consists of specified procedures and information for each test method responding to the requirements of the product standard. Specific information must be provided for portions of individual test methods when needed to comply with the standard's criteria or otherwise support the laboratory's operation.

"RCW" means the Revised Code of Washington. Electronic copies of electrical RCW are available from the department and the office of the code reviser (https://leg.wa.gov/codereviser).

"Readily accessible" means the definition as defined in NEC 100. In addition, it means that, except for keys, no tools or other devices are necessary to gain access (e.g., covers secured with screws, etc.).

"Service" or "served" means that as defined in RCW 34.05.010(19) when used in relation to department actions or proceedings.

A "sign," when required by the NEC, for use as an identification method (e.g., legibly marked, legible warning notice, marked, field marked, permanent plaque/directory, etc.) means "identification plate."

A "stand-alone amplified sound or public address system" is a system that has distinct wiring and equipment for audio signal generation, recording, processing, amplification, and reproduction. This definition does not apply to telecommunications installations.

"Story" is that portion of a building included between the upper surface of a floor and the upper surface of the floor or roof next above. Next above means vertically and not necessarily directly above. Also see "basement" and "mezzanine."

"Structure," for the purposes of this chapter and in addition to the definition in the NEC, means something constructed either in the field or factory that is used or intended for supporting or sheltering any use or occupancy as defined by the IBC.

"Supervision" for the purpose of supervising electrical trainees, means that the appropriately certified supervising electrician is on the same job site as the trainee being supervised. The trainee is not considered to be on the same job site if the supervising electrician and the trainee are working:

(a) In separate buildings at a single address (e.g., a campus, multibuilding industrial complex, multibuilding apartment complex, etc.) except for a single-family residence; or

(b) On an outdoor project (e.g., irrigation system, farm, street lighting, traffic signalization, etc.) where the trainee is more than 1,000 feet from the supervising electrician or where the trainee is more than 200 feet from the supervising electrician and out of sight.

"System design review" means a set of design documents that include the manufacturer's installation information, a legible one-line diagram of the system design, and calculations used to determine voltage and current within the system. The one-line diagram must show the system equipment, devices, overcurrent protection, conductor sizing, grounding, ground fault protection if required, and any system interconnection points. The review must be available to the inspector during all inspections.

A "telecommunications local service provider" is a regulated or unregulated (e.g., by the Federal Communications Commission or the utilities and transportation commission as a

telephone or telecommunications provider) firm providing telecommunications service ahead of the telecommunications network demarcation point to an end-user's facilities.

"TIA/EIA" means the Telecommunications Industries Association/Electronic Industries Association which publishes the TIA/EIA Telecommunications Building Wiring Standards. Standards and publications are adopted by TIA/EIA in accordance with the American National Standards Institute (ANSI) patent policy.

A "training school" is a Washington public community or technical college or not-for-profit nationally accredited technical or trade school licensed by the work force training and education coordinating board under chapter 28C.10 RCW.

"Under the control of a utility" for the purposes of RCW 19.28.091 and 19.28.101 is when electrical equipment is not owned by a utility and:

(a) Is located in a vault, room, closet, or similar enclosure that is secured by a lock or seal so that access is restricted to the utility's personnel; or

(b) The utility is obligated by contract to maintain the equipment and the contract provides that access to the equipment is restricted to the utility's personnel or other qualified personnel.

"UL" means Underwriters Laboratory.

"Utility" means an electrical utility.

"Utility system" means electrical equipment owned by or under the control of a serving utility that is used for the transmission or distribution of electricity from the source of supply to the point of contact and is defined in section 90.2 (b)(5) of the National Electrical Code, 1981 edition (see RCW 19.28.010(1)).

"Utilization voltage" means the voltage level employed by the utility's customer for connection to lighting fixtures, motors, heaters, or other electrically operated equipment other than power transformers.

"Variance" is a modification of the electrical requirements as adopted in chapter 19.28 RCW or any other requirements of this chapter that may be approved by the chief electrical inspector if assured that equivalent objectives can be achieved by establishing and maintaining effective safety.

"WAC" means the Washington Administrative Code. Electronic copies of this chapter of the WAC are available from the department and the office of the code reviser (https://leg.wa.gov/codereviser).

WAC 296-46B-110 General requirements for electrical installations.

003 Examination, identification, installation, use, and listing (product certification) of equipment.

(1) Listed electrical conduit can only be installed and used in accordance with its listing (i.e., as an electrical raceway for electrical conductors). If used as a sleeve for electrical conductors or other listed electrical conduits, the installation of a listed electrical conduit will be assumed to be for use as an electrical raceway and must be installed as allowed by chapter 19.28 RCW and this chapter (e.g., owner exemption, electrical contractor, etc.).

EXCEPTION: Electrical nonmetallic elbow fittings may be connected to piping other than

electrical conduit for the purposes of enclosing mechanical piping systems provided the elbows are distinctively marked to indicate their use as nonelectrical fittings prior to installation. For underground installations outside of buildings, elbows used for purposes other than electrical must be substantially painted to match the color of piping to which they are connected.

011 Deteriorating agents.

(2) Electrical equipment and wiring that has been submerged or exposed to water must comply with the following:

(a) All breakers, fuses, controllers, receptacles, lighting switches/dimmers, electric heaters, and any sealed device/equipment (e.g., relays, contactors, etc.) must be replaced.

(b) All other electrical equipment (e.g., wiring, breaker panelboards, disconnect switches, switchgear, motor control centers, boiler controls, HVAC/R equipment, electric motors, transformers, appliances, water heaters, and similar appliances) must be replaced or reconditioned by the original manufacturer or by its approved representative.

022 Identification of disconnecting means.

(3) For the purposes of legibly marking a disconnecting means, as required in NEC 110.22, an identification plate is required unless the disconnect is a circuit breaker/fused switch installed within a panelboard and the circuit breaker/fused switch is identified by a panelboard schedule. In other than dwelling units, the identification plate must include the identification designation of the circuit source panelboard that supplies the disconnecting means.

030 Over 1,000 volts - General.

(4) Each cable operating at over 1,000 volts and installed on customer-owned systems must be legibly marked in a permanent manner at each termination point and at each point the cable is accessible. The required marking must use phase designation, operating voltage, and circuit number if applicable.

WAC 296-46B-210 Branch circuits not over 1,000 volts ac, 1,500 volts dc nominal.

008(A) Dwelling units GFCI requirements.

(1) In a garage or unfinished basement, a red receptacle, with a red cover plate, supplying a fire alarm system is not required to have ground-fault circuit-interrupter protection. The receptacle must be identified for use only with the fire alarm system by an identification plate or engraved cover with letters at least 1/4 inch high.

(2) All fixed electrical equipment with exposed grounded metal parts within an enclosed shower area or within five feet of the top inside edge of a bathtub must have ground fault circuit interrupter protection.

008(B) Other than dwelling units - GFCI requirements.

(3) GFCI requirements. GFCI protection for personnel will not be required for:

(a) Three-phase receptacles unless specifically required elsewhere in the NEC; or

(b) Receptacles other than 125-volt, single phase, 15- or 20-ampere used for: Recreational vehicle supply equipment or for attachment of a mobile home supply cord.

For the purposes of NEC 210.8(B), kitchen means any area where utensils, dishes, etc., are cleaned or where food or beverages are prepared or cooked.

011 Branch circuits.

(4) A raceway system or one dedicated 15-ampere minimum, 120 volt circuit must be taken to all unfinished space areas adaptable to future dwelling unit living areas that are not readily accessible to the service or branch circuit panelboard. One circuit or raceway is required for each 480 square feet or less of unfinished space area. If the total adjacent unfinished space area is less than 480 square feet, the circuit can be an extension of an existing circuit. The circuits must terminate in a suitable box(es). The box must contain an identification of the intended purpose of the circuit(s). The branch circuit panelboard must have adequate space and capacity for the intended load(s).

013 Ground fault protection of equipment.

(5) Equipment ground fault protection systems required by the NEC must be tested prior to being placed into service to verify proper installation and operation of the system as determined by the manufacturer's published instructions. A firm having qualified personnel and proper equipment must perform the tests required. A copy of the manufacturer's performance testing instructions and a written performance acceptance test record signed by the person performing the test must be available at the time of inspection. The performance acceptance test record must include test details including, but not limited to, all trip settings and measurements taken during the test.

025 Common area branch circuits.

(6) For the purpose of NEC 210.25, loads for septic or water well systems that are shared by no more than two dwelling units may be supplied from either of the two dwelling units if approved by the local building official and local health department.

052 (A)(2) Dwelling unit receptacle outlets.

(7) For the purpose of NEC 210.52 (A)(2)(1), "similar openings" include the following configurations that are a permanent part of the dwelling configuration or finish:

(a) Window seating; and

(b) Bookcases or cabinets that extend from the floor to a level at least five feet six inches above the floor.

Any outlets eliminated by such window seating, bookcases, or cabinets must be installed elsewhere within the room.

052 (C)(2) Island and peninsular countertop and work surfaces.

(8) If receptacle outlets are not installed to serve an island or peninsular countertop or work surface, no future provisions to do so are required.

063 Equipment requiring servicing.

(9) For the purposes of NEC 210.63, when equipment requiring servicing is located outdoors, accessible locations for receptacle outlets do not include locations accessed through doors or windows.

WAC 296-46B-215 Feeders.

002 Minimum rating and size.

(1) For other than one- or two-family dwelling feeders rated up to 400 amperes, if the feeder conductors have a lesser ampacity than the equipment rating that they terminate in or

on, an identification plate showing conductor ampacity stating: "Feeder conductor ampacity: _____ " must be installed on the equipment at the load end of the feeder conductors.

005 Diagrams of feeders.

(2) Other than plan review projects, the installer must provide a one-line diagram showing the service and feeder details for the project before the initial inspection can be approved for all nondwelling services or feeders:

(a) Larger than 400 amperes; or

(b) Over 600 volts.

The diagram must be signed and dated by the project owner if the owner is doing the work, the assigned administrator or master electrician if an electrical contractor is doing the work, or stamped with an engineer's mark and signature who is registered under chapter 18.43 RCW. The diagram must show:

(c) All services including: Wire size(s), wire type(s), service size(s) (e.g., voltage, phase, ampacity), overcurrent protection, available symmetrical fault current at the service point, equipment short-circuit rating, total load before and after demand factors have been applied including any demand factors used, and a panel schedule where multiple disconnecting devices are present; and

(d) All feeders including: Wire size(s), wire type(s), feeder size(s) (e.g., voltage, phase, ampacity), overcurrent protection, total calculated load before and after demand factors have been applied including any demand factors used, and a panel schedule(s) where multiple disconnecting devices are present.

If the installer deviates, in any way, from the service/feeder design shown on the diagram, a supplemental diagram must be supplied to the inspector showing the most recent design before inspection can proceed. Load reductions and moving branch circuit locations within a panelboard do not require a supplemental diagram. Written documentation must also be provided to the inspector that the supplemental diagram was provided to the project owner at the time of submission to the inspector.

The diagram must be available on the job site during the inspection process.

010 Ground fault protection testing.

(3) Equipment ground fault protection systems required by the NEC must be tested prior to being placed into service to verify proper installation and operation of the system as determined by the manufacturer's published instructions. This test or a subsequent test must include all system feeders unless the installer can demonstrate, in a manner acceptable to the inspector, that there are no grounded conductor connections to the feeder(s). A firm having qualified personnel and proper equipment must perform the tests required. A copy of the manufacturer's performance testing instructions and a written performance acceptance test record signed by the person performing the test must be available at the time of inspection. The performance acceptance test record must include test details including, but not limited to, all trip settings and measurements taken during the test.

WAC 296-46B-220 Branch circuit, feeder, and service calculations.

042 Lighting load calculations.

In determining feeder and service entrance conductor sizes and equipment ratings, a building that is designed and constructed to comply with the currently adopted Washington state energy code unit lighting power allowance table and footnotes may be used in lieu of NEC 220.42. The requirements of NEC 220.42(B), items 1, 2, and 3 do not apply.

WAC 296-46B-225 Outside branch circuits and feeders.

019 Clearances from buildings for conductors of not over 1,000 volts, nominal.

(1) Add the following exception to NEC 225.19(A): Where the voltage between conductors does not exceed 300 and the roof area is guarded or isolated, a reduction in clearance to three feet shall be permitted.

031(B) Location of outside feeder disconnecting means.

(2) The disconnecting means required by NEC 225.31(B) must be provided to disconnect all ungrounded conductors that supply or pass through a building/structure in accordance with the requirements of NEC 225.31(B) with the following exceptions.

(a) Outside location: A feeder disconnecting means, including that required by NEC 700, 701, or 702 for a generator, is considered in the building if installed on the outside of the building/structure or within sight and within 15 feet of the building/structure. The building disconnecting means may supply only one building/structure unless the secondary building(s)/structure(s) has a separate building disconnecting means meeting the requirements of the NEC and this subsection. The disconnecting means must have an identification plate with at least one-half-inch high letters identifying:

(i) The building/structure served; and

(ii) Its function as the building/structure main disconnect(s).

(b) Inside location: The feeder disconnecting means must comply with NEC 225.31(B).

036 Suitable for use as service equipment.

(3) A generator disconnecting means installed per subsection (2)(a) of this section, is not required to be suitable for use as service equipment.

(4) A generator disconnecting means installed per subsection (2)(b) of this section, is not required to be suitable for use as service equipment when there is a feeder disconnecting means, located elsewhere on the premises, with overcurrent protection sized for feeder conductors.

WAC 296-46B-230 Services.

001 General service requirements.

(1) The owner, the owner's agent, or the electrical contractor making the installation must consult the serving utility regarding the utility's service entrance requirements for equipment location and meter equipment requirements before installing the service and equipment. Provisions for a meter and related equipment, an attachment of a service drop, or

an underground service lateral must be made at a location acceptable to the serving utility. The point of contact for a service drop must permit the clearances required by the NEC.

(2) A firewall must have a minimum two-hour rating as defined by the local building official to be considered a building separation in accordance with Article 100 NEC.

(3) The height of the center of the service meter must be as required by the serving utility. Secondary instrument transformer metering conductor(s) are not permitted in the service raceway.

028 Service or other masts.

(4) Conduit extended through the roof to provide means of attaching:

(a) All overhead drops for service, feeder, or branch circuits exceeding #1 AWG aluminum or #3 AWG copper must be rigid steel galvanized conduit no smaller than two inches.

(b) All overhead drops for service, feeder or branch circuits not exceeding #1 AWG aluminum or #3 AWG copper must be rigid steel galvanized conduit no smaller than 1 1/4 inches. The installation must comply with drawings E-101 and/or E-102, or must provide equivalent strength by other approved means. Masts for altered or relocated installations will be permitted to comply with drawing E-103.

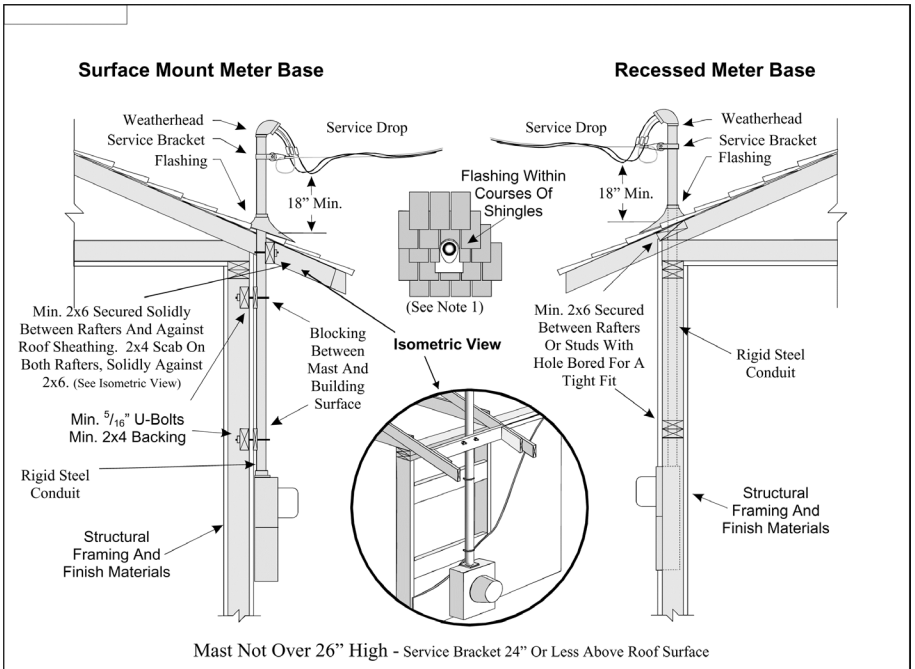

Service Mast Installation Details | Drawing E-101

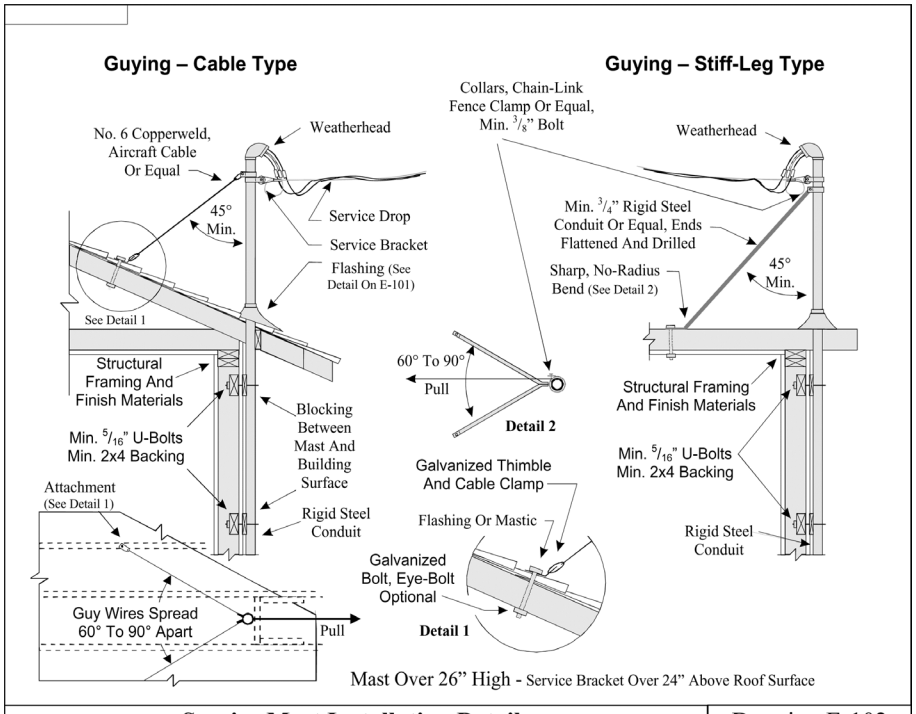

Service Mast Installation Details | Drawing E-102

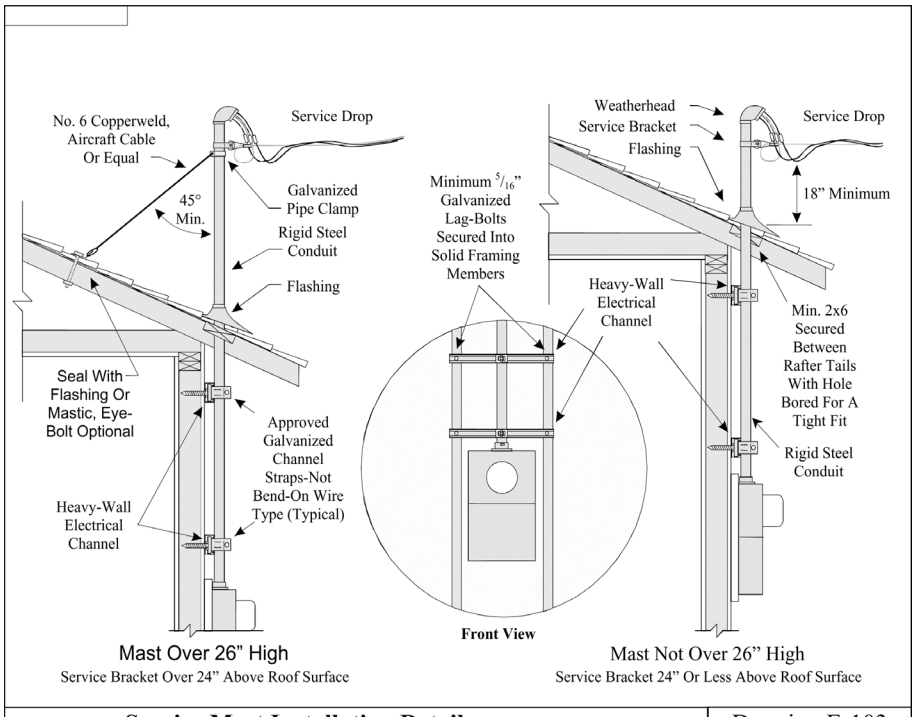

Service Mast Installation Details (Per Note 6) | Drawing E-103

Notes to drawings E-101, E-102, and E-103

(1) An approved roof flashing must be installed on each mast where it passes through a roof. Plastic, nonhardening mastic must be placed between lead-type flashings and the conduit. Neoprene type flashings will also be permitted to be used.

(2) Masts must be braced, secured, and supported in such a manner that no pressure from the attached conductors will be exerted on a roof flashing, meter base, or other enclosures.

(3) Utilization of couplings for a mast is permitted only below the point the mast is braced, secured, or supported. There must be a minimum of two means of support above any

couplings used. A properly installed cable or stiff leg type support qualifies as one of the two required means of support.

(4) Except as otherwise required by the serving utility, service mast support guys must be installed if the service drop attaches to the mast more than 24 inches above the roof line or if the service drop is greater than 100 feet in length from the pole or support. Masts for support of other than service drops must comply with this requirement as well.

(5) Intermediate support masts must be installed in an approved manner with methods identical or equal to those required for service masts.

(6) For altered services, where it is impractical to install U bolt mast supports due to interior walls remaining closed, it will be permissible to use other alternate mast support methods such as heavy gauge, galvanized, electrical channel material that is secured to two or more wooden studs with 5/16 inch diameter or larger galvanized lag bolts.

(7) Conductors must extend at least 18 inches from all mastheads to permit connection to the connecting overhead wiring.

040 Service conductors - Two-family and multiple-occupancy buildings.

(5) Two-family and multiple-occupancy buildings. A second or additional service drop or lateral to a building having more than one occupancy will be permitted to be installed at a location separate from other service drops or laterals to the building provided that all the following conditions are complied with:

(a) Each service drop or lateral must be sized in accordance with the NEC for the calculated load to be served by the conductors;

(b) Each service drop or lateral must terminate in listed metering/service equipment;

(c) Each occupant must have access to the occupant's service disconnecting means;

(d) No more than six service disconnects may be supplied from a single transformer;

(e) All service drops or laterals supplying a building must originate at the same transformer or power supply;

(f) A permanent identification plate must be placed at each service disconnect location that identifies all other service disconnect locations in or on the building, the area or units served by each, the total number of service disconnecting means on the building/structure and the area or units served. If a structure consists of multiple buildings (i.e., by virtue of fire separation), all service disconnects in or on the entire structure must be labeled to identify all service disconnects in or on the structure; and

(g) A permanent identification plate must be placed at each feeder disconnecting means identifying the area or units served if the feeder disconnecting means is remote from the area or unit served.

042 Service conductor - Size and rating.

(6) For other than one- or two-family dwelling services rated up to 400 amperes, if the service conductors have a lesser ampacity than the overcurrent protection, permitted by NEC 230.90 or NEC 310.15, or the equipment rating that they terminate in or on, an identification plate showing the ampacity of the conductors stating: "Service conductor ampacity: _____" must be installed on the service equipment.

043 Wiring methods for 1,000 volts, nominal or less.

(7) The installation of service conductors not exceeding 1,000 volts, nominal, within a building or structure is limited to the following methods: Galvanized or aluminum rigid metal

conduit; galvanized intermediate metal conduit; wireways; busways; auxiliary gutters; minimum schedule 40 rigid polyvinyl chloride conduit; cablebus; or mineral-insulated, metal-sheathed cable (type MI). Exception: Wiring methods per NEC 230.43 shall be permitted for service conductors within a building or structure when those conductors are protected by customer owned supply side overcurrent protection sized per NEC 240.4.

(8) Existing electrical metallic tubing, installed prior to October 1984, which is properly grounded and used for service entrance conductors may be permitted to remain if the conduit is installed in a nonaccessible location and is the proper size for the installed conductors.

(9) In addition to methods allowed in the NEC, the grounded service conductor is permitted to be identified with a yellow jacket or with one or more yellow stripes.

070 Service equipment - Disconnecting means.

(10) The service disconnecting means must be installed at a readily accessible location in accordance with (a) or (b) of this subsection.

(a) Outside location: Service disconnecting means will be permitted on the building or structure or within sight and within 15 feet of the building or structure served. The building disconnecting means may supply only one building/structure. The service disconnecting means must have an identification plate with one-half-inch high letters identifying:

(i) The building/structure served; and

(ii) Its function as the building/structure main service disconnect(s).

(b) Inside location: When the service disconnecting means is installed inside the building or structure, it must be located so that the service raceway extends no more than 15 feet inside the building/structure. Exception: There is no limit to the length of service raceway when conductors are protected by customer owned supply side overcurrent protection sized per NEC 240.4.

085(C) Replacements.

(11) This subsection replaces NEC 230.85(C). When service equipment suppling one- and two-family dwellings is replaced, an emergency disconnecting means must be installed whenever the service ampacity is increased or decreased, or when any of the following are relocated: Service disconnects, meter bases, overhead service masts, or underground service risers.

095 Ground-fault protection of equipment.

(12) Equipment ground-fault protection systems required by the NEC must be tested prior to being placed into service to verify proper installation and operation of the system as determined by the manufacturer's published instructions. This test or a subsequent test must include all service voltage feeders unless the installer can demonstrate, in a manner acceptable to the department, that there are no grounded conductor connections to the feeder(s). A firm having qualified personnel and proper equipment must perform the tests required. A copy of the manufacturer's performance testing instructions and a written performance acceptance test record signed by the person performing the test must be available for the inspector at the time of inspection. The performance acceptance test record must include test details including, but not limited to, all trip settings and measurements taken during the test.

WAC 296-46B-235 Branch circuits, feeders, and services over 1,000 volts ac, 1,500 volts dc nominal.

402(B) Wiring methods.

The installation of service entrance conductors exceeding 1,000 volts ac, 1,500 volts dc, nominal, within a building or structure must be limited to the following methods: Galvanized rigid metal conduit, galvanized intermediate metal conduit, schedule 80 polyvinyl chloride conduit, metal-clad cable that is exposed for its entire length, cablebus, or busways. Exception: Wiring methods per NEC 235.402(B) shall be permitted for service conductors within a building or structure when customer owned overcurrent protection in accordance with NEC requirements is provided outside the building.

WAC 296-46B-240 Overcurrent protection.

024(C) Not exposed to physical damage.

(1) Where the NEC or manufacturer's instructions do not specify minimum height requirements for equipment enclosures, enclosures installed outdoors containing an overcurrent device(s) shall be installed so the bottom of the enclosure containing the overcurrent device(s) is not less than 24 inches above finished grade unless:

(a) The equipment enclosure or listed equipment on which the enclosure is mounted is approved for pad-, floor-, ground-, dock-, or pier-mounting; or

(b) The equipment enclosure is located over concrete or asphalt paving that extends three or more feet horizontally from the surface of the enclosure.

024(F) Not located over steps.

(2) If the overcurrent device is a part of a panelboard that is being repaired or replaced in an existing location, the installation is allowed to be made above the steps.

067(C) Performance testing.

(3) Where fuses rated 1,200 amperes and higher are installed, the following shall be available to the inspector at the installation site at the time of inspection prior to placing the equipment into service:

(a) Documentation of all calculations used to determine available arcing current at each set of fuses rated 1,200 amperes and higher and documentation proving a clearing time of 0.07 seconds or less at the available arcing current;

(b) A copy of the written performance test report for the arc energy reduction protection system detailing results for tests for each set of fuses suppling known loads. The report shall include all of the following:

(i) The date when tests were performed.

(ii) Address of the property where tests were performed.

(iii) The business name and contact information for the employer of persons performing tests.

(iv) Names and dated signatures of all persons performing the tests.

(v) Documentation of all calculations used to determine available arcing current at each set of fuses rated 1,200 amperes and higher.

(vi) Documentation required by 240.67(A) and documentation of all equipment settings made or verified during testing.

(vii) A copy of the equipment manufacturer's instructions used to perform the test.

(viii) Documentation of all testing equipment including dates of calibration.

087(C) Performance testing.

(4) Where the highest continuous current trip setting for the actual overcurrent device installed in a circuit breaker is rated or can be adjusted is 1,200 amperes or higher, a copy of the written performance test report for the arc energy reduction protection system detailing results for tests for each device with a known load. The report shall be available to the inspector at the installation site at the time of inspection prior to placing the equipment into service. The report shall include all of the following:

(a) The date when tests were performed.

(b) Address of the property where tests were performed.

(c) The business name and contact information for the employer of persons performing tests.

(d) Names and dated signatures of all persons performing the tests.

(e) Documentation of all calculations used to determine available arcing current at each circuit breaker described in subsection (4) of this section.

(f) Documentation required by 240.87(A) and documentation of all equipment settings made or verified during testing.

(g) A copy of the equipment manufacturer's instructions used to perform the test.

(h) Documentation of all testing equipment including dates of calibration.

WAC 296-46B-250 Grounding and bonding.

028 (D)(3) Separately derived system with more than one enclosure.

(1) NEC 250.28 (D)(3) is amended to read: Where a separately derived system supplies more than a single enclosure, the system bonding jumper for each enclosure shall be sized in accordance with 250.28 (D)(1) based on the largest ungrounded feeder/tap conductor serving that enclosure, or a single system bonding jumper shall be installed at the source and sized in accordance with 250.28 (D)(1) based on the equivalent size of the largest supply conductor determined by the largest sum of the areas of the corresponding conductors of each set.

052 Grounding electrodes.

(2) Except for mobile/manufactured homes, a concrete encased grounding electrode must be installed and used at each new building or structure that is built upon a permanent concrete foundation. The electrode must comply, with NEC 250.52 (A)(3). Inspection of the electrode may be accomplished by the following methods:

(a) At the time of inspection of other work on the project, providing the concrete encased electrode is accessible for a visual inspection;

(b) At the time of the service inspection providing the installer has provided a method so the inspector can verify the continuity of the electrode conductor along its entire length, with a minimum 20 foot linear span between testing points (e.g., attaching a length of copper wire to one end of the electrode that reaches the location of the grounding electrode conductor that will enable the inspector to measure the resistance with a standard resistance tester). The concrete encased electrode does not have to be accessible for a visual inspection; or

(c) Other method when prior approval, on a job site basis, is given by the inspector.

If a special inspection trip is required to inspect a grounding electrode conductor, a trip fee will be charged for that inspection in addition to the normal permit fee.

Exceptions: (1) If the concrete encased grounding electrode is not available for connection, a ground ring must be installed per NEC 250 or other grounding electrode installed per NEC 250 verified to measure 25 ohms or less to ground. Resistance verification testing must be performed by an independent firm having qualified personnel and proper equipment. A copy of the testing procedures used and a written resistance test record signed by the person performing the test must be available at the time of inspection. The resistance test record must include test details including, but not limited to, the type of test equipment used, the last calibration date of the test equipment, and all measurements taken during the test.

(2) Where a concrete encased electrode is not part of the grounding electrode system of an existing building or structure, a concrete encased electrode that may be available as a result of a new addition to the foundation is not required to be connected to service equipment that existed before the addition.

053 (A)(2) Resistance of rod, pipe, and plate electrodes.

(3) For rod, pipe, and plate electrodes other than those installed in accordance with the exception in subsection (2) of this section, if a ground resistance test is not performed to ensure a resistance to ground of 25 ohms or less, two or more electrodes as specified in NEC 250.52 must be installed a minimum of six feet apart. A temporary construction service is not required to have more than one made electrode.

(4) For services only, when multiple buildings or structures are located adjacent, but structurally separate from each other, any installed rod, pipe, or plate electrodes used for those services must be installed so that each building's or structure's electrodes are not less than six feet apart from the adjacent building's or structure's electrodes.

064 Grounding electrode conductor installation – Physical protection.

(5) Grounding electrode conductors will be considered to be not exposed to physical damage when the conductor(s) are:

(a) Buried more than 12 inches deep in the earth outside the building's footprint;

(b) Encased or covered by two inches of concrete or asphalt;

(c) Located inside the building footprint and protected by the building's structural elements or when inside and determined, by the inspector, to not be subject to physical damage; or

(d) Enclosed by a metal or nonmetallic raceway or enclosure. The raceway or enclosure must be approved to protect from severe physical damage if it is not protected by appropriate physical barriers from contact with vehicles, lawn mowers, and other equipment that might damage the conductor or enclosure.

068 Accessibility.

(6) The termination point of a grounding electrode conductor tap to the grounding electrode conductor must be accessible unless the connection is made using an exothermic or irreversible compression connection.

090 Bonding.

(7) Metallic stubs or valves used in nonmetallic plumbing systems are not required to be bonded to the electrical system unless required by an electrical equipment manufacturer's instructions.

(8) Hot and cold water plumbing lines are not required to be bonded together if, at the time of inspection, the inspector can determine the lines are mechanically and electrically joined by one or more metallic mixing valves.

104(B) Bonding - Other metal piping.

(9) For flexible metal gas piping, installed new or extended from an existing rigid metal piping system, either:

(a) Provide a copy of the manufacturer's bonding instructions to the inspector at the time of inspection and follow those instructions; or

(b) The bonding conductor for the gas system must:

(i) Be a minimum 6 AWG copper; and

(ii) Terminate at:

(A) An accessible location at the gas meter end of the gas piping system on either a solid iron gas pipe or a cast flexible gas piping fitting using a listed grounding connector; and

(B) Either the service equipment enclosure, service grounding electrode conductor or electrode, or neutral conductor bus in the service enclosure.

184 Solidly grounded neutral systems over 1,000 volts.

(10) In addition to the requirements of NEC 250.184(A), the following applies for:

(a) Existing installations.

(i) The use of a concentric shield will be allowed for use as a neutral conductor for extension, replacement, or repair, if all of the following are complied with:

(A) The existing system uses the concentric shield as a neutral conductor;

(B) Each individual conductor contains a separate concentric shield sized to no less than 33 1/2 percent of the ampacity of the phase conductor for three-phase systems or 100 percent of the ampacity of the phase conductor for single-phase systems;

(C) The new or replacement cable's concentric shield is enclosed inside an outer insulating jacket; and

(D) Existing cable (i.e., existing cable installed directly in the circuit between the work and the circuit's overcurrent device) successfully passes the following tests:

• A cable maintenance high potential dielectric test. The test must be performed in accordance with the cable manufacturer's instruction or the 2019 ANSI/NETA maintenance test specifications; and

• A resistance test of the cable shield. Resistance must be based on the type, size, and length of the conductor used as the cable shield using the conductor properties described in NEC Table 8 Conductor Properties.

An electrical engineer must provide a specific certification to the electrical plan review supervisor in writing that the test results of the maintenance high potential dielectric test and the resistance test have been reviewed by the electrical engineer and that the cable shield is appropriate for the installation. The electrical engineer must stamp the certification document with the engineer's stamp and signature. The document may be in the form of a letter or electrical plans.

Testing results are valid for a period of seven years from the date of testing. Cable will not be required to be tested at a shorter interval.

(ii) A concentric shield used as a neutral conductor in a multigrounded system fulfills the requirements of an equipment grounding conductor.

(b) New installations.

(i) New installations do not include extensions of existing circuits.

(ii) The use of the concentric shield will not be allowed for use as a neutral conductor for new installations. A listed separate neutral conductor meeting the requirements of NEC 250.184(A) must be installed.

WAC 296-46B-300 General requirements for wiring methods and materials.

(1) Cables and raceways for power limited, NEC Class 2 and Class 3 conductors must be installed in compliance with Chapter 3 NEC unless other methods are specifically required elsewhere in the NEC, chapter 19.28 RCW, or this chapter.

005 Underground installations.

(2) Induction loops.

See WAC 296-46B-010(17) for induction detection loops that are made in a public roadway and regulated by a governmental agency.

Other induction loops must comply with the following requirements:

(a) General:

(i) A preformed direct burial induction loop is designed to be installed within the road surface base (e.g., concrete or asphalt) or below the road surface of a road with an unpaved surface (e.g., gravel or brick pavers);

(ii) A saw-cut induction detection loop is designed to be installed into a groove saw-cut into an existing paved road surface (e.g., concrete or asphalt);

(iii) The loop system includes the loop and the lead-in conductor;

(iv) The loop system must be:

(A) Tested to assure that at 500 volts DC, the resistance between the conductor and ground equals or exceeds 50 megohms; and

(B) Without splice; or

(C) If spliced, the splice must be soldered and appropriately insulated;

(v) The lead-in conductor must comply with the following:

(A) Must be stranded and have a lay (i.e., twist) of two turns per foot; and

(B) If installed in an electrical raceway;

• Are not required to be listed or suitable for wet locations; and

• Must have a burial cover of at least six inches; or

(C) If direct buried;

• Must be listed for the use; and

• Must have a burial cover of at least 18 inches.

(b) Preformed direct burial induction detection loops must conform with the following:

(i) The loop conductor must be rated for direct burial and be a minimum of No. 16 AWG;

(ii) The loop design must not allow movement of the loop conductor within the outer jacket. The outer jacket containing the loop conductor is not required to be listed;

(iii) The loop yoke casing (i.e., the location where the lead-in conductor is connected to the loop):

(A) Includes any device used to house the "loop to lead-in splice" or to otherwise couple the loop with the lead-in electrical raceway;

(B) Is not required to be listed; and

(C) Must have a coupler that will create a waterproof bond with the electrical raceway, containing the lead-in conductor, or a direct buried lead-in conductor.

(c) Saw-cut induction detection loops:

(i) The loop conductor must be cross-linked polyethylene or EPR Type USE insulation and be a minimum of No. 18 AWG stranded;

(ii) The saw-cut groove must not cut into rebar installed within the roadway.

011 Support of raceways, cables, or boxes in suspended ceilings.

(3) NEC power limited, Class 2, and Class 3 cables must be secured in compliance with NEC 334.30 and must be secured to boxes in compliance with NEC 314.17.

(4) Telecommunications cables must be secured in a manner that will not cause damage to the cables and at intervals not exceeding five feet. Cables are considered adequately supported when run through holes in building structural elements or other supporting elements. Telecommunications cables may be fished into inaccessible hollow spaces of finished buildings. Clamps or fittings are not required where telecommunications cables enter boxes.

(5) Optical fiber cables must be secured in a manner that will not cause damage to the cables and at intervals not exceeding five feet. Cables are considered adequately supported when run through holes in building structural elements or other supporting elements. Optical fiber cables may be fished into inaccessible hollow spaces of finished buildings. Supports must allow a bending radius that will not cause damage to the cables.

(6) Where not restricted by the building code official or Article 300 NEC, the wires required in NEC 300.11(B) may support raceways, cables, or boxes under the following conditions:

(a) Raceways and/or cables are not larger than three-quarter-inch trade size;

(b) No more than two raceways or cables are supported by a support wire. The two-cable limitation does not apply to telecommunications cables, Class 2 cables, or Class 3 cables on support wires installed exclusively for such cables. The support wire must be adequate to carry the cable(s) weight and all attached cables must be secured with approved fittings; or

(c) Raceways and cables are secured to the support wires by fittings designed and manufactured for the purpose.

In addition to (a), (b), and (c) of this subsection, the following conditions must be complied with:

(d) The support wires are minimum #12 AWG and are securely fastened to the structural ceiling and to the ceiling grid system; and

(e) The raceways or cables serve equipment that is located within the ceiling cavity or is mounted on or supported by the ceiling grid system. Telecommunications cables, Class 2 cables, or Class 3 cables supported as required by this section, may pass through ceiling cavities without serving equipment mounted on or supported by the ceiling grid system.

017 Conductors in raceway.

(7) Cables will be permitted in all raceway systems if:

(a) The cable is appropriate for the environment; and

(b) The percentage fill does not exceed that allowed in NEC Chapter 9, Table 1.

WAC 296-46B-314 Outlet, device, pull, and junction boxes; conduit bodies; fittings; and handhole enclosures.

029(A) Accessibility of conduit bodies and boxes.

(1) Conduit bodies, junction, pull, and outlet boxes must be installed so that the wiring and devices contained in them is accessible without removing any part of the building structure, including insulation material.

023(H) Flexible cord connection of pendant boxes.

(2) The flexible cord and cord connection must comply with NEC 314.23(H) and the following:

(a) A suspended pendant box must not contain conduit "knockouts" and connection to a suspended box must utilize an integral threaded hub;

(b) The maximum length of the cord for a suspended pendant drop from a permanently installed junction box to a suitable tension take-up device above the pendant box must not exceed six feet;

(c) The flexible cord must be supported at each end with an approved cord grip or strain relief connector fitting/device that will eliminate all stress on the conductor connections;

(d) The flexible cord must be a minimum #14 AWG copper;

(e) The flexible cord ampacity must be determined using NEC Table 400.5(A) column A; and

(f) The flexible cord must be hard or extra hard usage.

027(C) Boxes at ceiling-suspended (paddle) fan outlets.

(3) For the purposes of NEC 314.27(C), locations acceptable for the installation of ceiling-suspended (paddle) fans include all ceiling areas of habitable rooms of dwelling occupancies except: Areas within four feet of walls, soffits, or fixed cabinetry; or areas directly above permanently installed island or peninsular countertop surfaces.

WAC 296-46B-334 Nonmetallic-sheathed cable.

010 Nonmetallic-sheathed cable.

(1) The building classification, for subsections (2), (3), and (4) of this section, will be as determined by the building official. For the purposes of this section, Type III, IV-HT and V may be as defined in the International Building Code adopted in the state of Washington. The installer must provide the inspector documentation substantiating the type of building construction and finish material rating(s) prior to any electrical inspection.

(2) This section replaces NEC 334.10(2). In multifamily dwellings, Type NM, Type NMC, and Type NMS cable(s) may be used in structures of Types III, IV-HT, and V construction except as prohibited in NEC 334.12.

(3) This section replaces NEC 334.10(3). In all other structures, Type NM, Type NMC, and Type NMS cable(s) may be used in structures of Types III, IV-HT, and V construction except as prohibited in NEC 334.12. All cable(s) must be concealed within walls, floors, or ceilings that

provide a thermal barrier of material that has at least a 15-minute finish rating as identified in listings of fire-rated assemblies.

(4) This section replaces NEC 334.10(4). Cable trays in structures of Types III, IV-HT, and V construction, where the cable(s) is identified for the use, except as prohibited in NEC 334.12.

015 Exposed work.

(5) Where Type NMC cable is installed in shallow chases in plaster, masonry, concrete, adobe or similar material, the cable must be protected against nails or screws by:

(a) A steel plate at least 1/16 inch thick and covered with plaster, adobe, or similar finish; or

(b) Being recessed in a chase at least 2 3/4 inches deep, as measured from the finished surface, and covered with plaster, adobe, or similar finish. The cable(s) must be at least 2 1/2 inches from the finished surface.

(6) The requirements for nonmetallic sheathed cable protection in NEC 334.15(C) do not apply in crawl spaces.

(7) Wet or damp locations prohibited in NEC 334.12(B)(4) do not include the interior of conduits installed outdoors used for physical protection of NM cables under the following conditions:

(a) Cables emerging from a building interior, attic, or crawlspace remain unbroken until terminated; and

(b) Flexible metal conduits are not used; and

(c) No conduit systems are longer than 10 feet or below grade; and

(d) Conduits are sealed to prevent air movement and are arranged to naturally drain.

WAC 296-46B-336 Power and control tray cable—Type TC.

010 Uses permitted.

In addition to the uses allowed in NEC 336.10, Type TC cable may be used in any location allowed for nonmetallic-sheathed cable in NEC 334 if all the installation requirements in NEC 336 and 334 and WAC 296-46B-334 are met.

WAC 296-46B-358 Electrical metallic tubing.

012 Electrical metallic tubing.

(1) In addition to complying with the provisions of Article 358 NEC, electrical metallic tubing may not be installed in direct contact with the earth or in concrete on or below grade. Also see NEC 300.6 for resistance to corrosion.

(2) Where electrical metallic tubing is installed in wet locations, an equipment grounding conductor must be provided within the raceway and sized per NEC 250.122.

WAC 296-46B-394 Concealed knob-and-tube wiring.

001 Knob-and-tube wiring.

Article 394 NEC does not prohibit the installation of loose or rolled thermal insulating material in spaces containing existing knob-and-tube wiring provided that all the following conditions are met:

(1) The wiring must be surveyed by an appropriately licensed electrical contractor who must certify in writing to the department that the wiring is in good condition with no evidence of improper overcurrent protection, conductor insulation failure or deterioration, and with no improper connections or splices. The electrical inspector must inspect all repairs, alterations, or extensions to the electrical system.

(2) The insulation must meet Class I specifications as identified in the Uniform Building Code, with a flame spread factor of 25 or less as tested using ASTM E84-81a. Foam insulation may not be used with knob-and-tube wiring.

(3) All knob-and-tube circuits must have overcurrent protection in compliance with NEC Table 310.16, 60 degree centigrade column. Overcurrent protection must be either circuit breakers or Type S fuses.

WAC 296-46B-408 Switchboards, switchgear, and panelboards.

In addition to the requirements of NEC 230.70(A), service equipment, subpanels, and similar electrical equipment must be installed so that they are readily accessible and may not be installed in clothes closets, toilet rooms, or shower rooms.

WAC 296-46B-410 Luminaires, lampholders, and lamps.

010 Luminaires in specific locations.

(1) All luminaires within an enclosed shower area or within five feet of the waterline of a bathtub must be enclosed, unless specifically listed for such use; these luminaires, with exposed metal parts that are grounded, must be ground fault circuit interrupter protected.

042 Luminaires with exposed conductive surfaces.

(2) Replacement luminaires that are directly wired or attached to boxes supplied by wiring methods that do not provide a ready means for grounding and that have exposed conductive surfaces will be permitted only where the luminaires are provided with ground-fault circuit-interrupter protection and marked "no equipment ground."

056 Protection of conductors and insulation.

(3) Requirements for stranded conductors in NEC 410.56(E) do not apply to branch-circuit conductors.

062 Flexible cord connection of electric discharge luminaires.

(4) A ground-type attachment plug cap and receptacle connection at the source junction box is not required when the flexible cord complies with NEC 410.62 and the following:

(a) Connection to a source junction box must utilize an approved cable connector or clamp;

(b) The maximum length of the cord for a suspended pendant drop from a permanently installed junction box to a suitable tension take-up device above the pendant luminaire must not exceed six feet;

(c) The flexible cord must be supported at each end with an approved cord grip or strain relief connector fitting/device that will eliminate all stress on the conductor connections;

(d) The flexible cord must be a minimum #14 AWG copper;

(e) The flexible cord ampacity must be determined in NEC Table 400.5(A) column A;

(f) The flexible cord must be hard or extra hard usage; and

(g) A vertical flexible cord supplying electric discharge luminaires must be secured to the luminaire support as per NEC 334.30(A).

WAC 296-46B-422 Appliances.

010 Water heater circuit.

Water heaters with a rated circuit load in excess of 3,500 watts at 208 or 240 volts must be provided with branch circuit conductors not smaller than #10 AWG copper or equal. Overcurrent protection must comply with NEC 422.11(E).

WAC 296-46B-430 Motors, motor circuits, and controllers.

007 Marking on motors and multimotor equipment.

Except as required by the National Electrical Code, there is no requirement for motors to be identified for use or listed/field evaluated by a laboratory. All motors must be manufactured according to National Electrical Manufacturer's Association (NEMA), or International Electrotechnical Commission (IEC) standards for motors except motors that:

(1) Are a component part of equipment listed or field evaluated by a laboratory; or

(2) Are a component part of industrial utilization equipment approved by the department per WAC 296-46B-903.

WAC 296-46B-450 Transformers and transformer vaults (including secondary ties).

027 Flammable-liquid or oil-filled transformers installed outdoors.

(1) Flammable-liquid or oil-filled transformers installed outdoors must meet the following requirements:

(a) A transformer installed adjacent to a building/structure with any combustible surface may be located only in the shaded "Approved Transformer Area" shown in Figure 450-1;

"Approved Transformer Area" shown in Figure 450-1;

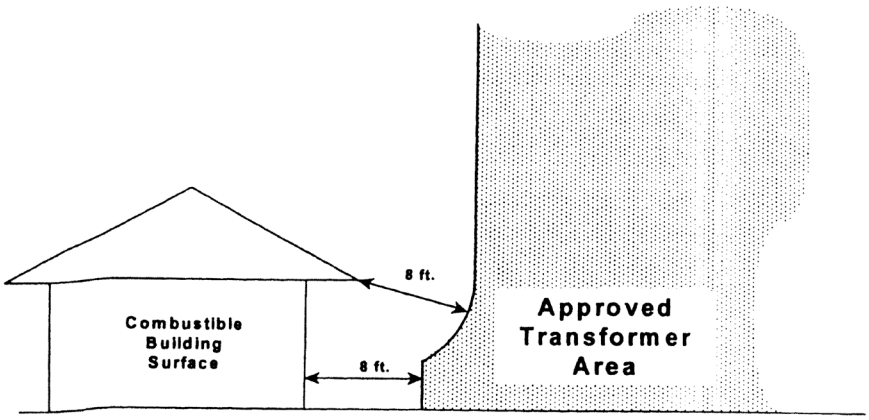

Figure 450-1

(b) A transformer installed adjacent to a building/structure with no combustible surface(s) may be located only in the shaded "Approved Transformer Area" shown in Figure 450-2;

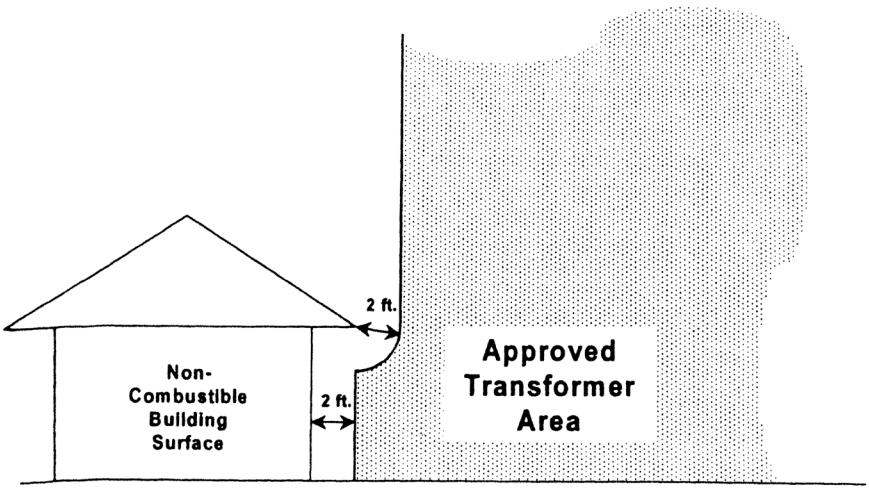

Figure 450-2

(c) In an area in which a transformer is to be installed next to a nonhabitable structure, the transformer may be no closer than two feet to the building/structure and must be outside a line extended vertically from the ends of the eaves or rooflines;

(d) A building/structure may have no doors, windows, stairways, or other openings closer than eight feet to the transformer;

(e) The finished grade at the location of the transformer must be such that any oil leaking from the transformer will flow away from the building/structure and will not pool; and

(f) If transformers are installed in areas subject to traffic other than pedestrian traffic, they must be provided with adequate guarding.

(2) Enclosures for total underground flammable-liquid or oil-filled transformers must not be located within eight feet of a doorway, operable window, stairways or fire escape. Adequate space must be maintained above the enclosure so that a boom may be used to lift the transformer from the enclosure.

WAC 296-46B-500 Hazardous (classified) locations, Classes I, II, and III, Divisions 1 and 2.

005 Classification of locations.

Classification of locations may only be done by the authority having jurisdiction or a professional engineer registered in Washington who uses appropriate National Fire Protection Standards as a basis for classification. The authority having jurisdiction is allowed to make the final determination in cases of conflict.

WAC 296-46B-501 Class I locations.

001 Sewage disposal systems.

(1) Pumping chambers for sewage, effluent, or grinder pumps in on-site and septic tank effluent pump (S.T.E.P.) disposal systems will be considered unclassified when not more than five residential units are connected to the system, residential units are connected to a utility sewage system, or when nonresidential systems have residential loading characteristics and all of the following general installations requirements are complied with:

(a) The pumping chamber must be adequately vented. Venting may be accomplished through the building or structure plumbing vents where the system venting has been approved by the local jurisdiction authority or by a direct two-inch minimum vent to the atmosphere;

(b) Equipment that in normal operation may cause an arc or spark must not be installed in any pumping chamber;

(c) Float switches installed in a pumping chamber must be hermetically sealed to prevent the entrance of gases or vapors;

(d) Junction boxes, conduits and fittings installed in the septic atmosphere must be of a noncorrosive type, installed to prevent the entrance of gases or vapors;

(e) Where a conduit system is installed between the pumping chamber and the control panel, motor disconnect, or power source, an approved sealing method must be installed to prevent the migration of gases or vapors from the pumping chamber, and must remain accessible; and

(f) Wire splices in junction boxes installed in pumping chambers must be suitable for wet locations.

(2) Residential wastewater loading characteristics in a nonresidential installation:

(a) For systems that process less than 3,500 gallons of wastewater per day may be certified by:

(i) An on-site wastewater designer licensed under chapter 18.210 RCW; or

(ii) A professional engineer, engaged in the business of on-site wastewater system design, licensed under chapter 18.43 RCW.

(b) For systems that process 3,500 gallons or more of wastewater per day may be certified by a professional engineer, engaged in the business of on-site wastewater system design, licensed under chapter 18.43 RCW.

Written documentation must be signed and stamped by the designer or engineer and provided to the electrical inspector prior to inspection.

(3) Any residential or nonresidential system that has building or structure floor drains being discharged into the system is classified as Class I Division 1. Drains from any commercially made tub, shower, basin, sink, or toilet are not considered floor drains.

(4) Pumping chamber access covers can be covered by gravel, light aggregate, or noncohesive granulated soil, and must be accessible for excavation. Access covers that are buried must have their exact location identified at the electrical panel or other prominent location by an identification plate. The authority having jurisdiction for performing electrical inspections must approve the identification plate location.

(5) Indoor grinder pumps installed in chambers with less than 50 gallons capacity are not required to meet the requirements of this section, except for the venting requirements in subsection (1)(a) of this section. Indoor grinder pumps installed in chambers with less than 50 gallons capacity are not classified systems as described in Article 500 NEC.

(6) Secondary treatment effluent pumping chambers such as sand filters are unclassified, and require no special wiring methods.

(7) Inspection approval is required prior to covering or concealing any portion of the septic electrical system, including the pump. New septic and effluent tanks containing electrical wires and equipment must be inspected and approved prior to being loaded with sewage.

(8) On-site sewage disposal systems using pumps must have audible and visual alarms designed to alert the resident of a malfunction. The alarm must be placed on a circuit independent of the pump circuit.

WAC 296-46B-505 Zone 0, 1, and 2 locations.

007 Implementation of zone classification.

For the purposes of NEC 505.7, qualified person means a professional engineer registered in Washington.

WAC 296-46B-513 Aircraft hangars.

001 Scope.

The scope for NEC 513 applies only when the property containing the building is classified or zoned as an aircraft hangar by the authority having jurisdiction.

WAC 296-46B-514 Motor fuel dispensing facilities.

001 General.

(1) In addition to the scope included in NEC 514.1, Article 514 NEC must be complied with for all liquefied flammable gas storage or transfer facilities.

003 Classifications of locations.

(2) For the purposes of NEC 514.3 (D)(2), delete Exception No. 1 and No. 2 and replace with:

Dock, pier, or wharf sections that do not support fuel dispensers and may abut a section(s) that supports a fuel dispenser(s) are permitted to be unclassified where documented air space between the sections is provided and where flammable liquids or vapors cannot travel to these sections. See NEC 500.4 for documentation requirements.

011 Emergency disconnecting means - Dispensing and service stations.

(3) An emergency disconnecting means or operator must be provided to disconnect the pump or dispensing equipment serving gasoline, volatile flammable liquids, or liquefied flammable gases. The emergency disconnecting means or operator must disconnect all conductors of the circuit supplying all station dispensers and/or pumps (including the grounded conductor) simultaneously from the source(s) of supply.

(4) For installations with only one dispensing device, the emergency disconnecting means/operator may be used to satisfy subsection (3) of this section.

(5) For multicircuit installations, an electrically held normally open contactor operated by a push-button may serve as the disconnecting means to satisfy subsection (3) of this section. If a disconnecting pushbutton is used, the pushbutton may not function as the resetting mechanism for the electrically held contactor. The resetting means must be:

(a) Located at least 15 feet or out of sight from the disconnecting pushbutton;

(b) Installed behind a cover or guard; and

(c) Identified with an identification plate that is substantially black in color.

(6) The disconnecting means satisfying subsection (3) of this section must be labeled with an identification plate, with letters at least one inch high, as the emergency disconnecting means. The disconnecting means or operator must be substantially red in color.

013 Maintenance and service of dispensing equipment.

(7) The means to remove all external voltage sources for maintenance and service of dispensing equipment required by NEC 514.13 must be capable of isolating each dispenser individually from all external voltage sources including the grounded conductor, while all other dispensers remain operational.

WAC 296-46B-517 Health care facilities.

001 Health care facilities.

In health care facilities, the following methods must be used to determine adequate capacity and ratings of equipment providing electrical power for the essential electrical systems defined in Article 517 NEC:

(1) Systems in new facilities:

(a) Essential electrical system: The essential electrical system must consist of three branches known as:

(i) Life safety branch: The feeder conductors and equipment used to supply electrical power to the life safety branch must be determined by summation of the connected loads as determined by Article 220 NEC and may not be subjected to any reduction due to the diversity of the loads. Feeder and equipment will be subject to a 125 percent multiplier for continuous loads in accordance with Article 220 NEC.

(ii) Critical branch: The feeder conductors and equipment must be calculated in accordance with Article 220 NEC, including a level of diversity as determined by such article.

(iii) Equipment branch: The feeder conductors and equipment used to supply electrical power to the equipment branch of the essential electrical system must be calculated in accordance with Article 220 NEC, including a level of diversity as determined by such article.

(b) Generator sizing: The rating of the generator(s) supplying electrical power to the essential system of a health care facility must meet or exceed the summation of the loads determined in (a) of this subsection with no additional demand factors applied. Momentary X-ray loads may be ignored if the generator is rated at least 300 percent of the largest momentary X-ray load connected.

(2) Existing essential systems in facilities to which additional load is to be added:

(a) Existing loads: The existing loads of the separate branches of the essential electrical system may be determined by WAC 296-46B-900 (3)(j).

(b) Added loads: Added loads to the separate branches of the essential electrical system must be determined by subsection (1) of this section.

(c) Generator sizing: The rating of the generator(s) supplying electrical power to the essential electrical system must meet or exceed the summation of the loads determined by (a) and (b) of this subsection with no additional demand factors applied.

013 Wiring methods.

(3) The last sentence of NEC 517.13(A) is modified to read: The metal raceway system, or metallic cable armor, or sheath assembly shall itself qualify as an equipment grounding conductor in accordance with 250.118 with the exception of 250.118 (10)(a).

017 Ground-fault protection of equipment.

(4) The applicability of NEC 700.31 ground-fault protection of equipment, specified by NEC 517.26 for the life safety branch, will also apply to the NEC 517 essential electrical system's critical branch(es) and equipment branch(es).

WAC 296-46B-547 Agricultural buildings.

001 Scope.

NEC 547 requirements apply only when the agricultural building is greater than 1,000 square feet and is used as part of a business or commercial farming activity.

WAC 296-46B-550 Mobile homes, manufactured homes and mobile home parks.

001 Mobile/manufactured homes - Inspection.

(1) All alterations to the mobile/manufactured home electrical system must be permitted and inspected.

(a) Any circuit or feeder that is fed from the pedestal or panel from an outbuilding feeding the mobile/manufactured home requires a permit from the electrical section.

(b) Any circuit or feeder that originates from the mobile/manufactured home's (i.e., red factory assembled structures label) panel and feeds an addition or equipment that is attached (e.g., garage, heat pump, or air conditioning unit) requires an FAS alteration permit.

(c) Any circuit or feeder that originates in the mobile/manufactured home panel and feeds an unattached structure or equipment (e.g., detached garage, hot tub, pool, well, septic system, yard lighting, or generation equipment, etc.) requires two inspections. An FAS permit is required for the circuit or feeder from the panel and must terminate in a J-box located under the home's exterior wall near the rim joist. A second permit is required from the electrical section for electrical work from the J-box to the equipment or structure.

032 Mobile/manufactured homes - Service.

(2) If an electrical service is installed on the mobile/manufactured home:

(a) The manufacturer's instructions allowing mounting of service equipment on the mobile/manufactured home must be available to the inspector at the installation site at the time of the first inspection of the electrical service. The instructions must be specific regarding the type of service allowed: Overhead or underground; or

(b) It must be installed only by the manufacturer, at the manufacturing plant. The manufacturer must complete the service except for service connections, meter, and grounding electrode conductor; and

(c) The owner or an electrical contractor must complete the service at the site.

033 Mobile/manufactured homes - Feeder.

(3) When the mobile or manufactured home is supplied with power using a permanent wiring method, the equipment grounding conductor will be permitted to be bare. Bare conductors used underground must be copper. For the purposes of this section, portable cord is not considered a permanent wiring method.

WAC 296-46B-555 Marinas, boatyards, floating buildings, and commercial and noncommercial docking facilities.

(1) For the purposes of NEC 555.7, transformer terminations must be located a minimum of 12 inches above the deck of a dock (datum plane requirements do not apply for this section).

(2) For the purposes of NEC 555.4, adjacent means within sight.

(3) For the purposes of NEC 555.30, all electrical connections must be installed a minimum of 12 inches above the deck of a pier unless the connections are within junction boxes identified for wet locations, utilizing sealed wire connector systems listed and identified for submersion (datum plane requirements do not apply for this section).

(4) For the purposes of NEC 555.31, all enclosures of a type referenced in NEC 110.28 must be marked with an enclosure type number referenced in NEC Table 110.28 that protects

against corrosive agents. All gasketed enclosures must be arranged with a weep hole to discharge condensation.

(5) For the purposes of NEC 555.32, gasketed enclosures are only required for wet locations.

(6) For the purposes of NEC 555.34, the following wiring methods are allowed:

(a) All wiring installed in a damp or wet location must be suitable for wet locations.

(b) Extra-hard usage portable power cables rated not less than 75°C, 600 volts, listed for wet locations and sunlight resistance and having an outer jacket rated for the environment are permitted. Portable power cables are permitted as a permanent wiring method under or within docks and piers or where provided with physical protection. The requirements of NEC 555.34 (B)(3)(b) do not apply.

(c) Overhead wiring must be installed at the perimeter of areas where boats are moored, stored, moved, or serviced to avoid possible contact with masts and other parts of boats. NEC Article 398 open wiring on insulators is not an approved wiring method in or above any portion of a marina or docking facility.

(d) For the purposes of NEC 555.34 (B)(4), the wiring methods of Chapter 3 NEC will be permitted.

(7) For the purposes of NEC 555.33, receptacles must be mounted not less than 12 inches above the deck surface of the pier or dock (datum plane requirements do not apply for this section). Shore power receptacles that provide shore power for boats must be rated not less than 20 amperes and must be single outlet type and must be of the locking and grounding type or pin and sleeve type.

Floating buildings.

(8) Where shore power is provided, a disconnecting means must be located within sight of each floating building or similar facility. The disconnecting means must be installed adjacent to but not in or on the floating building or similar facility.

(9) NEC 555.53 is amended to read: The overcurrent protective device(s) that supply the floating building shall have ground-fault protection not exceeding 30 mA.

(10) Conductors operating in excess of 600 volts, nominal may not be installed on floating portions of a floating building or similar facility.

WAC 296-46B-590 Temporary installations.

001 Temporary installations.

(1) For the purposes of this section, any circuit used for construction purposes is considered to be temporary.

003 Temporary installations - Time constraints.

(2) Temporary construction service equipment may only be used for construction purposes and must be disconnected when the permanent service is connected unless the department grants an extension of time.

004 Temporary installations - Splices.

(3) A splice or junction box is required for all wiring splice or junction connections in a temporary installation.

WAC 296-46B-600 Electric signs and outline lighting.

001 Electrical signs - General.

(1) All electrical signs and outline lighting, regardless of voltage, must be listed or field evaluated by a testing laboratory accredited by the department to the applicable ANSI UL Standard. Installations will be inspected for compliance with installation instructions and the NEC.

(2) Luminaires in outdoor awnings must be suitable for wet locations and be connected by a wiring method suitable for wet locations.

(3) Fluorescent luminaires must be located at least six inches from the awning fabric. Incandescent lamps or luminaires must be located at least 18 inches from the awning fabric. A disconnecting means must be installed per Article 600 NEC.

(4) Listed awning signs must be installed in compliance with the manufacturer's instructions and the NEC.

(5) Retrofitting signs. When listed signs or listed outline lighting are retrofitted to an LED light source, a licensed (01) general electrical contractor or (04) sign contractor using properly certified individuals or properly supervised trainees may make the retrofit in place so long as all the retrofit components and retrofit kit are listed and installation instructions applicable to the sign for making the retrofit are available for the inspector's use at the time of the inspection and physical access is provided to allow the inspector access to all components of the retrofit kit.

004 Markings.

(6) In addition to the markings required by the NEC, retrofit signs and outline lighting shall be marked with a label, made of a background color contrasting to the listed product, in a location visible during servicing near the listed retrofit subassembly that states, "This equipment contains a retrofit subassembly that may present a risk of electrical hazard. Replace parts only with same type and rating." The label's font must be Arial size 16 bold. This label may be an identification plate as described in WAC 296-46B-100 or an adhesive label approved by the electrical inspector. This label is in addition to any labeling required by the manufacturer's instructions or the UL Standard used to manufacture the retrofit kit.

007 Grounding and bonding.

(7) Remote metal parts of a section sign or outline lighting system only supplied by a remote Class 2 power supply that is listed or is a recognized component in a listed section sign or outline lighting is not required to be bonded to an equipment grounding conductor.

010 Portable or mobile outdoor electrical signs.

(8) A GFCI receptacle outlet that is weatherproof with the supply cord connected must be installed within six feet of each portable or mobile electrical sign.

(9) Extension cords are not permitted to supply portable outdoor signs.

(10) All portable outdoor electrical signs must be listed by a qualified electrical testing laboratory accredited by the department.

030 Neon tubing.

(11) NEC 600, Part II, Field-Installed Skeleton Tubing, will apply to the installation of all neon tubing and neon circuit conductors.

(12) Field-installed skeleton tubing is not required to be listed. Installations will be inspected for compliance with installation instructions and the NEC.

WAC 296-46B-620 Elevators, dumbwaiters, escalators, moving walks, platform lifts, and stairway chairlifts.

051 Disconnecting means.

In accordance with WAC 296-96-02460, elevator section:

(1) The main line disconnect(s) must be located per NFPA 70, Article 620.51(C) and:

(a) Inside the machine room door on the strike side of the machine or control room door;

(b) Not more than 24 inches from the door to the operating handle; and

(c) Be at a height not less than 36 inches nor more than 66 inches above the finish floor as measured centerline to the disconnect handle.

(2) For multicar machine rooms the switches shall be grouped together as close as possible to that location.

(3) For machine rooms with double swing doors, the doors must swing out and the switch(es) shall be located on the wall adjacent to the hinge side of the active door panel.

(4) Shunt-trip breakers, where provided shall be located in the elevator machine room or control room.

(5) Where shunt-trip breakers are also being used as a main line disconnect, they shall comply with subsections (1) through (3) of this section.

WAC 296-46B-680 Swimming pools, fountains, and similar installations.

001 General.

(1) Package spa or hot tubs. Electrical heating, pumping, filtering, and/or control equipment installed within five feet of a spa or hot tub must be listed or field evaluated as a package with the spa or hot tub.

(2) A factory assembled skid pack of electrical heating, pumping, filtering, and/or control equipment must be installed more than five feet from a spa or hot tub and must be listed as a package unit.

(3) The maintenance disconnect and field installed, listed electrical equipment for a hot tub, spa, or swim spa must be located at least five feet from the hot tub, spa or swim spa. Field installed listed equipment must meet the following additional requirements:

(a) The heater is listed as a "spa heater or swimming pool heater";

(b) The pump is listed as a "spa pump" or "swimming pool/spa pump" (the pump may be combined with a filter assembly); and

(c) Other listed equipment such as panelboards, conduit, and wire are suitable for the environment and comply with the applicable codes.

(4) Field installed, listed electrical equipment for a swimming pool must be located at least five feet from the swimming pool. Field installed listed equipment must meet the following additional requirements:

(a) The heater must be listed as a "swimming pool heater or a spa heater";

(b) The pump must be listed as a "swimming pool pump" or "spa pump" or "swimming pool/spa pump"; and

(c) Other equipment such as panelboards, conduit, and wire must be suitable for the environment and comply with the applicable codes.

The five foot separation may be reduced by the installation of a permanent barrier, such as a solid wall, fixed glass windows or doors, etc. The five foot separation will be determined by the shortest path or route that a cord can travel from the spa, hot tub, swim spa, or swimming pool to an object.

(5) The field assembly or installation of "recognized components" will not be permitted.

(6) Hydromassage bathtubs must be listed as a unit and bear a listing mark which reads "hydromassage bathtub."

(7) Manufacturers' instructions must be followed as part of the listing requirements.

(8) Electrical components which have failed and require replacement must be replaced with identical products unless the replacement part is no longer available; in which case, a like-in-kind product may be substituted provided the mechanical and grounding integrity of the equipment is maintained.

(9) Cut-away-type display models may not be sold for other than display purposes and are not expected to bear a listing mark.

070 Hydromassage bathtubs.

(10) For hydromassage bathtubs, the ground fault circuit interrupter device must be identified as to use and not located in a building or tub cavity, crawlspace, or attic.

(11) For hydromassage bathtubs, all electrical equipment installed to support the bathtub (e.g., disconnecting means, motor, etc.) must be accessible at the same grade level as the tub or from a landing on the exterior of the building without the use of a ladder or other access device.

WAC 296-46B-690 Solar photovoltaic systems.

002 Definitions.

(1) Building integrated means: Photovoltaic cells, modules, panels, or arrays that are integrated into the outer surface or structure of a building and serve as the outer protective surface of that building, such as the roof, skylights, windows, or facades.

004 Installation.

(2) Support structure or foundation. For the purposes of this section, those portions of the structure support or foundation that are exclusively mechanical and are not part of a bonding or grounding path will not be considered part of the photovoltaic system as defined by this section. Such structural support or foundation may be done by the owner, registered general contractor, or licensed electrical contractor without electrical permit or inspection.

(3) A photovoltaic system design review defined in WAC 296-46B-100 must be available at the installation site at the time of the first inspection and until the inspection process is complete.

(4) The entity placing a building integrated cell, module, panel, or array is not subject to the requirements for electrical inspection, licensing, or certification so long as the work is limited to the placement and securing of the device and an electrical work permit has been previously obtained for the electrical work related to the equipment by an entity authorized to do that electrical work.

(5) All electrical work, including wiring installation, terminations, etc., necessary to complete the electrical installations must be completed by the entity authorized to do the electrical work (i.e., owner or appropriate electrical contractor).

007 Maximum voltage.

(6) The open-circuit voltage temperature coefficients supplied in the instructions of listed photovoltaic modules will be used to determine the maximum direct current photovoltaic system voltage. Otherwise the voltage will be calculated using Table 690.7 of the NEC. For the purposes of this calculation, a temperature correction factor of 1.25 will be used unless another factor can be justified and is approved by the authority having jurisdiction.

WAC 296-46B-692 Fuel cell systems.

A fuel cell system design review defined in WAC 296-46B-100 must be available at the installation site at the time of the first inspection and until the inspection process is complete.

WAC 296-46B-694 Wind electric systems.

A wind driven generator system design review defined in WAC 296-46B-100 must be available at the installation site at the time of the first inspection and until the inspection process is complete.

WAC 296-46B-700 Emergency systems.

001 Emergency systems - General.

(1) In all health or personal care facilities defined in this chapter, educational facilities, institutional facilities, hotels, motels, and places of assembly for 100 or more persons, all exit and emergency lights must be installed in accordance with Article 700 NEC and located as required in standards adopted by the state building code council under chapter 19.27 RCW.

007 Signs.

(2) The sign(s) required in NEC 700.7 must be placed at the service disconnecting means and the meter base if the service disconnecting means and meter base are not located within sight and within five feet of each other.

010 Emergency systems - Equipment identification.

(3) All exit and emergency lights, whether or not required by the NEC, must be installed in accordance with Article 700 NEC.

(4) All boxes and enclosures, for Article 700 NEC systems, larger than six inches by six inches, including transfer switches, generators, and power panels for emergency systems and circuits must be permanently identified with an identification plate that is substantially orange in color, except in existing health care facilities the existing nameplate identification color scheme can be retained for transfer switches, generators, and power panels for existing emergency systems that are not being replaced or modified. All other device and junction boxes for emergency systems and circuits must be substantially orange in color, both inside and outside.

032 Selective coordination.

(5) The requirements for selective coordination described in NEC 700.32 are not required where the emergency system was installed prior to June 1, 2006, provided that no system modifications, additions, deletions, or overcurrent protective devices in that system were replaced on or after April 1, 2024. For new emergency systems that are supplied from an existing emergency system installed prior to June 1, 2006, the new portion of the emergency system must comply with NEC 700.32. The ground fault sensing function of overcurrent protective devices will only be required to selectively coordinate with the ground fault sensing functions of other overcurrent protective devices.

WAC 296-46B-701 Legally required standby systems.

007 Signs.

(1) The sign(s) required in NEC 701.7 must be placed at the service disconnecting means and the meter base if the service disconnecting means and meter base are not located within sight and within five feet of each other.

032 Selective coordination.

(2) The requirements for selective coordination described in NEC 701.32 are not required where the legally required standby system was installed prior to June 1, 2006, provided that no system modifications, additions, deletions, or overcurrent protective devices in that system were replaced on or after April 1, 2024. For new legally required standby systems that are supplied from an existing legally required standby system installed prior to June 1, 2006, the new portion of the legally required standby system must comply with NEC 701.27. The ground fault sensing function of overcurrent protective devices will only be required to selectively coordinate with the ground fault sensing functions of other overcurrent protective devices.

WAC 296-46B-702 Optional standby systems.

007 Signs.

The sign(s) required in NEC 702.7(A) must be placed where required and at the meter base if the meter base is not located within sight and within five feet of where a sign is required by NEC 702.7(A). When a disconnecting means required by NEC 230.85 is not present, the sign(s) required in NEC 702.7(A) must be placed at the service disconnecting means and the meter base if the service disconnecting means and the meter base are not located within sight and within five feet of each other.

WAC 296-46B-705 Interconnected electric power production sources.

(1) For utility interactive systems, any person making interconnections between a power production source and the utility distribution network must consult the serving utility and is required to meet all additional utility standards.

011 Supply side source connections.

(2) In addition to the requirements of NEC 705.11, electric power production source conductors connected to the supply side of the service disconnecting means must be installed using wiring methods specified for service conductors in WAC 296-46B-230(7). The disconnecting means providing overcurrent protection for the electric power production source conductors must comply with NEC 230.82(6). This disconnect is not required to be grouped with the service disconnecting means for the building or structure. Grounding and bonding must be in accordance with NEC 250.25.

(3) A system design review defined in WAC 296-46B-100 is required when any power sources regulated under NEC articles 230 (Services); 445 (Generators); 480 (Stationary Standby Batteries); 690 (Photovoltaic Systems); 692 (Fuel Cell Systems); 694 (Wind Electric Systems); 700 (Emergency Systems); 701 (Legally Required Systems); 702 (Optional Standby Systems); 706 (Energy Storage Systems), or other power sources are interconnected as part of a NEC 705 system. The system design review must be available at the installation site at the time of the first inspection and until the inspection process is complete.

WAC 296-46B-710 Standalone systems.

A system design review defined in WAC 296-46B-100 is required when power sources regulated under NEC articles 445 (Generators); 480 (Stationary Standby Batteries); 690 (Photovoltaic Systems); 692 (Fuel Cell Systems); 694 (Wind Electric Systems); 700 (Emergency Systems); 701 (Legally Required Systems); 702 (Optional Standby Systems); 706 (Energy Storage Systems), or other power sources are interconnected as part of a NEC 710 system. The system design review must be available at the installation site at the time of the first inspection and until the inspection process is complete.

WAC 296-46B-760 Fire alarm systems.

Device and junction boxes for fire alarm systems other than the surface raceway type, must be substantially red in color, both inside and outside. Power-limited fire protective signaling circuit conductors must be durably and plainly marked in or on junction boxes or other enclosures to indicate that it is a power-limited fire protective signaling circuit.

WAC 296-46B-800 General requirements for communications systems.

Chapters 1 through 7, NEC, supplement and modify the requirements of chapter 8, NEC. If there are specific requirements or exceptions described in chapter 8, NEC, that are different from those in chapters 1 through 7, NEC, chapter 8 will prevail.

001 Installation.

(1) All telecommunications installations on an end-user's property, beyond the end-user's telecommunications network demarcation point, made by a telecommunications service provider, both inside and outside of a building or structure, must conform to all licensing,

certification, installation, permitting, and inspection requirements described in chapter 19.28 RCW and this chapter.

(2) Telecommunications service providers including its subcontractors and agents must install and maintain points of demarcation in conformance with Code of Federal Regulations (C.F.R.), Title 47, Chapter 1, Part 68, Subpart B, Sec. 68.105 and may not place a point of demarcation further than 12 inches within an end-user's occupied space.

(3) The telecommunications service provider must identify the telecommunications network demarcation point(s) with an identification plate or label having:

(a) The provider's name;

(b) Customer/end-user's name; and

(c) If a CWSTP is used, the option type used.

(4) The C.F.R. prescribes that telecommunications service providers must choose either a MPOE (minimum point of entry) or CWSTP (cable wire service termination policy) which regulates where demarcations are placed within a multitenant environment.

(5) A telecommunications service provider, including its subcontractors and agents provisioning service for a second provider who is not the end-user of the service, must place the point of demarcation no further than 12 inches from the nearest POP (point of presence), of the serving provider, to the eventual end-user.

(6) Telecommunications service providers must designate each building that they provide services to with labeling at the terminating point(s) of their facilities indicating:

(a) Whether the building is under a MPOE policy; or

(b) Which option of a CWSTP is in effect.

(7) The CWSTP options for demarcation placement are as follows:

(a) All telecommunications service provider facilities will terminate at one location, mutually agreed upon by the provider and the building owner or designee, upon entry into the building, normally at the lowest common serving point. All demarcations will be placed no more than 12 inches from this point. The building owner and/or tenants will provide, manage and maintain building wire and cable placed beyond this demarcation point location.

(b) The telecommunications service provider's facilities will terminate at common locations, mutually agreed upon by the provider and the building owner or designee, throughout the building (terminal rooms, utility closets, etc.). The telecommunications service provider will provide, manage and maintain the building cable and registration jacks that denote the demarcation points. The demarcation points will be placed at these locations and will be accessible to end-users at these locations. This (b) is not an option for single tenant buildings.

(c) The telecommunications service provider will terminate facilities and place demarcations at locations, mutually agreed upon by the provider and the building owner or designee, within the individually occupied units, within 12 inches or a similarly reasonable distance of cable/wire entry. The provider will provide, manage and maintain the building cable, network terminating wire and registration jacks that denote the demarcation point. This (c) is not an option for single tenant buildings.

(d) All telecommunications service provider facilities and demarcations will terminate at one location on the property, mutually agreed upon by the provider and the building owner or designee. The building owner and/or tenants will provide, manage and maintain building wire and cable placed beyond the demarcation point location.

(8) The telecommunications installer must confer with the telecommunications provider when determining the point of demarcation.

002 Definitions.

(9) **"CWSTP (cable, wire and service termination policy)"** is the policy of the Federal Communications Commission (FCC) and the Washington utilities and transportation commission (WUTC) prescribed by tariff that governs negotiations between building owners and telecommunications service providers regarding the configuration of POP(s) and demarcation point(s) in multitenant buildings when a MPOE policy is not elected by the telecommunications service provider.

(10) **"MPOE (minimum point of entry)"** is a building wiring policy of the FCC and WUTC for multitenant environment locations that can be elected by telecommunications service providers. It prescribes that the telecommunications service provider will provide a single POP for access to its network and is located either at the closest practicable point to where a telecommunications service provider's facilities (fiber, coax, or copper) cross a property line or at the closest practicable point to where the wiring enters a multiunit building or buildings. All demarcations provided for customers and end-users by the provider will be placed within 12 inches of that POP.

(11) **"POP (point-of-presence),"** also called a **"POT (point-of-termination),"** is a designated point at or near a customer premise at which a telecommunications service provider's facilities for the provision of access service ends. This can be a fiber, coax, or copper connection point. Depending on the telecommunications service provider's CWSTP with the individual building owner, demarcations may be established at the POP or at other designated locations. When the customer of a telecommunications service provider is another carrier, the demarcation will be at the closest POP to the end-user. A telecommunications service provider may have multiple POPs within a multiple tenant environment.

PART B - ELECTRICAL PLAN REVIEW

WAC 296-46B-900 Electrical plan review.

Definition of occupancies.

(1) Occupancies are defined as follows:

(a) Educational facility refers to a building or portion of a building used primarily for educational purposes by six or more persons at one time for twelve hours per week or four hours in any one day. Educational occupancy includes: Schools (preschool through grade twelve), colleges, academies, universities, and trade schools.

(b) Institutional facility refers to a building or portion of a building used primarily for detention or correctional occupancies where some degree of restraint or security is required for a time period of twenty-four or more hours. Such occupancies include, but are not restricted to: Penal institutions, reformatories, jails, detention centers, correctional centers, and residential-restrained care.

(c) Health or personal care facility. Health or personal care facility refers to buildings or parts of buildings that contain, but are not limited to, facilities that are required to be licensed by the department of social and health services or the department of health (e.g., hospitals,

nursing homes, private alcoholism hospitals, private psychiatric hospitals, boarding homes, alcoholism treatment facilities, maternity homes, birth centers or childbirth centers, residential treatment facilities for psychiatrically impaired children and youths, and renal hemodialysis clinics) and medical, dental, or chiropractic offices or clinics, outpatient or ambulatory surgical clinics, and such other health care occupancies where patients who may be unable to provide for their own needs and safety without the assistance of another person are treated.

(i) "Hospital" means any institution, place, building, or agency providing accommodations, facilities, and services over a continuous period of twenty-four hours or more, for observation, diagnosis, or care of two or more individuals not related to the operator who are suffering from illness, injury, deformity, abnormality, or from any other condition for which obstetrical, medical, or surgical services would be appropriate for care or diagnosis.

(ii) "Nursing home," "nursing home unit" or "long-term care unit" means a group of beds for the accommodation of patients who, because of chronic illness or physical infirmities, require skilled nursing care and related medical services but are not acutely ill and not in need of the highly technical or specialized services ordinarily a part of hospital care.

(iii) "Boarding home" means any home or other institution, however named, which is advertised, announced, or maintained for the express or implied purpose of providing board and domiciliary care to seven or more aged persons not related by blood or marriage to the operator. It must not include any home, institution, or section thereof which is otherwise licensed and regulated under the provisions of state law providing specifically for the licensing and regulation of such home, institution, or section thereof.

(iv) "Enhanced service facility (ESF)" means a facility, or a portion of a facility, that provides treatment and services to persons for whom acute inpatient treatment is not medically necessary and who have been determined by the department to be inappropriate for placement in other licensed facilities due to the complex needs that result in behavioral and security issues. For the purposes of this chapter, an enhanced services facility is not an evaluation and treatment facility certified under chapter 71.05 RCW.

(v) "Private alcoholism hospital" means an institution, facility, building, or equivalent designed, organized, maintained, or operated to provide diagnosis, treatment, and care of individuals demonstrating signs or symptoms of alcoholism, including the complications of associated substance use and other medical diseases that can be appropriately treated and cared for in the facility and providing accommodations, medical services, or other necessary services over a continuous period of twenty-four hours or more for two or more individuals unrelated to the operator, provided that this chapter will not apply to any facility, agency, or other entity which is owned and operated by a public or governmental body.

(vi) "Private psychiatric hospital" means a privately owned and operated establishment or institution which: Provides accommodations and services over a continuous period of twenty-four hours or more, and is expressly and exclusively for observing, diagnosing, or caring for two or more individuals with signs or symptoms of mental illness who are not related to the licensee.

(vii) "Maternity home" means any home, place, hospital, or institution in which facilities are maintained for the care of four or more women, not related by blood or marriage to the operator, during pregnancy or during or within ten days after delivery: Provided, however, that this definition will not apply to any hospital approved by the American College of Surgeons, American Osteopathic Association, or its successor.

(viii) "Birth center" or "childbirth center" means a type of maternity home which is a house, building, or equivalent organized to provide facilities and staff to support a birth service provided that the birth service is limited to low-risk maternal clients during the intrapartum period.

(ix) "Ambulatory surgical facility" means a facility, not a part of a hospital, providing surgical treatment to patients not requiring inpatient care in a hospital.

(x) "Hospice care center" means any building, facility, place, or equivalent, organized, maintained, or operated specifically to provide beds, accommodations, facilities, or services over a continuous period of twenty-four hours or more for palliative care of two or more individuals, not related to the operator, who are diagnosed as being in the latter stages of an advanced disease which is expected to lead to death.

(xi) "Renal hemodialysis clinic" means a facility in a building or part of a building which is approved to furnish the full spectrum of diagnostic, therapeutic, or rehabilitative services required for the care of renal dialysis patients (including inpatient dialysis furnished directly or under arrangement). (NEC: Ambulatory Health Care Occupancy.)

(xii) "Medical, dental, and chiropractic clinic" means any clinic or physicians' office where patients are not regularly kept as bed patients for twenty-four hours or more. Electrical plan review is not required.

(xiii) "Residential treatment facility" means a facility licensed and operated twenty-four hours per day to provide health care to persons receiving services for a mental disorder or substance abuse.

(xiv) "Group care facility" means a facility other than a foster-family home maintained or operated for the care of a group of children on a twenty-four-hour basis.

Plan review for educational, institutional, or health care facilities/buildings.

(2) Plan review is a part of the electrical inspection process; its primary purpose is to determine:

(a) That service/feeder conductors are calculated and sized according to the proper NEC or WAC article or section;

(b) The classification of hazardous locations; and

(c) The proper design of emergency and standby systems.

(3) Electrical plan review.

(a) Electrical plan review is not required for:

(i) Low voltage systems;

(ii) Lighting specific projects that do not result in an electrical load increase on any feeder involved in the project;

(iii) Heating and cooling specific retrofit projects that do not result in an electrical load increase on any existing feeder involved in the project, provided there is not a corresponding increase in the available fault current in any feeder.

(iv) Stand-alone utility fed services that do not exceed 250 volts, 400 amperes where the project's distribution system does not include:

(A) Emergency systems other than listed unit equipment per NEC 700.12(F);

(B) An essential electrical system defined in NEC 517.2; or

(C) A required fire pump system.

(v) Modifications to existing electrical installations where all of the following conditions are met:

(A) Service or distribution equipment involved is rated not more than 400 amperes and does not exceed 250 volts or for lighting circuits not exceeding 277 volts to ground;

(B) Does not involve emergency systems other than listed unit equipment per NEC 700.12(F);

(C) Does not involve branch circuits or feeders of an essential electrical system as defined in NEC 517.2; and

(D) Service or feeder loads are not increased by more than 5% of the rated capacity of the electrical equipment supplying the modified load(s).

(vi) Electric power production source(s) such as solar photovoltaic, fuel cell, or wind electric system(s) with a total rating of 9600 watts or less.

(vii) For installations in (a)(ii), (iii), and (v) of this subsection to be considered, the following must be available to the electrical inspector before the work is initiated:

(A) A clear and adequate description of the project's scope;

(B) A load calculation(s);

(C) What the load changes are, providing both before and after panel schedules as needed; and

(D) Provide information showing that the service and feeder(s) supplying the panel(s) where the work is taking place has adequate capacity for any increased load and has code compliant overcurrent protection for that supply.

(b) Electrical plan review is required for all other new or altered electrical projects in educational, institutional, or health care occupancies defined in this chapter.

(c) If a review is required, the electrical plan must be submitted for review and approval before the electrical work is begun.

(d) Electrical plans.

(i) The plan must be submitted for plan review prior to beginning any electrical inspection. If a plan is rejected during the plan review process, no electrical inspection(s) may proceed until the plan is resubmitted and a conditional acceptance is granted.

(ii) The submitted plan will receive a preliminary review within seven business days after receipt by the department or city authorized to do electrical inspections.

(iii) If the submitted plan:

(A) Is rejected at the preliminary review, no inspection(s) will be made on the project.

(B) Receives conditional acceptance, the permit holder may request a preliminary inspection(s) in writing to the department or city authorized to do electrical inspections. The request must note that the preliminary inspection(s) is conditional and subject to any alterations required from the final plan review process.

(iv) Once the submitted plan has preliminary plan review approval, a copy of the submitted plan must be available on the job site for use by the electrical inspector.

(v) The final approved plan must be available on the job site, for use by the electrical inspector, after it is approved, but no later than prior to the final electrical inspection.

(vi) If the final approved plan requires changes from the conditionally accepted plan, alterations to the project may be required to make the project comply with the approved plan.

(vii) If the installer deviates from the service/feeder design shown on the final approved plan, a supplemental plan must be submitted for review before inspection can proceed. Load reductions or moving branch circuit locations within a panelboard do not require resubmission.

(e) All electrical plans for educational facilities, hospitals, and nursing homes must be prepared by, or under the direction of, a consulting engineer registered under chapter 18.43 RCW, and chapters 246-320, 180-29, and 388-97 WAC and stamped with the engineer's mark and signature.

(f) Refer plans for review to the Electrical Section, Department of Labor and Industries, P.O. Box 44460, Olympia, Washington 98504-4460 or the city authorized to do electrical inspections.

(g) Plans for projects within cities that perform electrical inspections must be submitted to that city for review.

(h) Plans to be reviewed must be legible, identify the name and classification of the facility, clearly indicate the scope and nature of the installation and the person or firm responsible for the electrical plans. The plans must clearly show the electrical installation or alteration in floor plan view, include all switchboard and panelboard schedules and when a service or feeder is to be installed or altered, must include a riser diagram, load calculation, fault current calculation, and interrupting rating of equipment. Where existing electrical systems are to supply additional loads, the plans must include documentation that proves adequate capacity and ratings. The plans must be submitted with a plan review submittal form available from the department or city authorized to do electrical inspections. Fees must be calculated based on the date the plans are received by the department or city authorized to do electrical inspections.

(i) The department may perform the plan review for new or altered electrical installations of other types of construction when the owner or electrical contractor makes a voluntary request for review. A city authorized to do electrical inspections may require a plan review of any electrical system.

(j) For existing structures where additions or alterations to feeders and services are proposed, NEC 220.87(1) may be used. If NEC 220.87(1) is used, the following is required:

(i) The date of the measurements.

(ii) A statement attesting to the validity of the demand data, signed by a professional electrical engineer or the electrical administrator of the electrical contractor performing the work.

(iii) A diagram of the electrical system identifying the point(s) of measurement.

(iv) Building demand measured continuously on the highest-loaded phase of the feeder or service over a thirty-day period, with the demand peak clearly identified. Demand peak is defined as the maximum average demand over a fifteen-minute interval.

Notes to Tables 900-1 and 900-2.
1. A city authorized to do electrical inspections may require plan review on facility types not reviewed by the department.

Table 900-1

Health or Personal Care Facilities

Health or Personal Care Facility Type	**Plan Review Required**
Hospital	Yes
Nursing home unit or long-term care unit	Yes
Boarding home	Yes

Health or Personal Care Facility Type	Plan Review Required
Assisted living facility	Yes
Private alcoholism hospital	Yes
Private psychiatric hospital	Yes
Maternity home	Yes
Ambulatory surgery facility	Yes
Renal hemodialysis clinic	Yes
Residential treatment facility	Yes
Enhanced service facility	Yes
Adult residential rehabilitation center	Yes

Table 900-2
Educational and Institutional Facilities, Places of Assembly, or Other Facilities

Educational, Institutional, or Other Facility Types	Plan Review Required
Educational	Yes
Institutional	Yes

PART C - PERMITS AND FEES

WAC 296-46B-901 General—Electrical work permits and fees.

General.

(1) When an electrical work permit is required by chapter 19.28 RCW or this chapter, inspections may not be made, equipment must not be energized, or services connected unless:

(a) A valid electrical work permit is obtained and posted per subsection (5) of this section;

(b) The classification or type of facility to be inspected and the exact scope and location of the electrical work to be performed are clearly shown on the electrical work permit;

(c) The address where the inspection is to be made is clearly identifiable from the street, road or highway that serves the premises; and

(d) Driving directions are provided for the inspectors' use.

(2) Except as allowed for annual permits and two-family dwellings, an electrical work permit is valid for only one specific job site address.

Permit - Responsibility for.

(3) Each person, firm, partnership, corporation, or other entity must furnish a valid electrical work permit for the installation, alteration, or other electrical work performed or to be performed solely by that entity. When the original purchaser is replaced, another entity may request, in writing, written approval from the chief electrical inspector to take responsibility for the work of the original installing entity under the original permit. If permission is not granted the entity must obtain a new permit for the remaining work.

Two or more entities may never work under the same permit. Each electrical work permit application must be signed by the electrical contractor's administrator (or designee) or the person, or authorized representative of the firm, partnership, corporation, or other entity that is performing the electrical installation or alteration. Permits purchased electronically do not require a handwritten signature. An entity designated to sign electrical permits must provide written authorization of the purchaser's designation when requested by the department or city that is authorized to do electrical inspections.

(4) Permits to be obtained by customers. Whenever a serving electrical utility performs work for a customer under one of the exemptions in WAC 296-46B-925 and the work is subject to inspection, the customer is responsible for obtaining all required permits.

(5) Except as allowed for Class B permits, where an electrical work permit is required, the work permit must be obtained and posted at the job site or the electrical work permit number must be conspicuously posted and identified as the electrical work permit number on or adjacent to the electrical service or feeder panel supplying power to the work prior to beginning any electrical work and at all times until the electrical inspection process is completed. Exceptions:

(a) For an owner, an electrical work permit for emergency like-in-kind repairs to an existing electrical system(s) must be obtained no later than the next business day after the work is begun.

(b) For an electrical contractor, in a city's jurisdiction where the city is authorized to do electrical inspections and does not have a provisional permit system, an electrical work permit for emergency like-in-kind repairs to an existing electrical system(s) must be obtained and posted, per the city's requirements at the job site no later than the next business day after the work is begun.

(6) Fees must be paid in accordance with the inspection fee schedule in Part C of this chapter. The amount of the fee due is calculated based on the fee effective at the date payment is made. If the project is required to have an electrical plan review, the plan review fees will be based on the fees effective at the date the plans are received by the department for review. In a city where the department is doing inspections as the city's contractor, a supplemental fee may apply.

Permit - Requirements for.

(7) As required by chapter 19.28 RCW or this chapter, an electrical work permit is required for the installation, alteration, or maintenance of all electrical systems or equipment except for:

(a) Travel trailers;

(b) Class A basic electrical work which includes:

(i) The **like-in-kind replacement** of lamps; a single set of fuses; a single battery smaller than 150 amp hour; contactors, relays, timers, starters, circuit boards, or similar control components; one household appliance; circuit breakers; single-family residential luminaires and

line voltage smoke or carbon monoxide alarms; a maximum of five snap switches, dimmers, receptacle outlets, thermostats, heating elements, luminaire ballasts or drivers/power supplies for single LED luminaires with an exact same ballast or driver/power supply; component(s) of electric signs, outline lighting, or skeleton neon tubing when replaced on-site by an appropriate electrical contractor and when the sign, outline lighting or skeleton neon tubing electrical system is not modified; one ten horsepower or smaller motor.

For the purposes of this section, "circuit breaker" means a circuit breaker that is used to provide overcurrent protection only for a branch circuit, as defined in NEC 100.

(ii) Induction detection loops described in WAC 296-46B-300(2) and used to control gate access devices;

(iii) Heat cable repair; and

(iv) Embedding premanufactured heat mats in tile grout where the mat is listed by an approved testing laboratory and comes from the manufacturer with preconnected lead-in conductors. All listing marks and lead-in conductor labels must be left intact and visible for evaluation and inspection by the installing electrician and the electrical inspector.

(v) The disconnection of electrical circuits from their overcurrent protection device for the specific purpose of removing the electrical wiring or equipment for disposal.

Unless specifically noted, the exemptions listed do not include: The replacement of an equipment unit, assembly, or enclosure that contains an exempted component or combination of components (e.g., an electrical furnace/heat pump, industrial milling machine, etc.) or any appliance/equipment described in this section for Class B permits.

In the department's jurisdiction, a provisional electrical work permit label may be posted in lieu of an electrical work permit. If a provisional electrical work permit label is used, an electrical work permit must be obtained within two working days after posting the provisional electrical work permit label. See WAC 296-46B-907(2) for provisional label requirements.

(c) The following types of systems and circuits are considered exempt from the requirements for licensing and permitting described in chapter 19.28 RCW. The electrical failure of these systems does not inherently or functionally compromise safety to life or property.

(i) Low-voltage thermocouple derived circuits;

(ii) Low-voltage circuits for residential: Garage doors and built-in vacuum systems;

(iii) Low-voltage circuits for underground: Landscape sprinkler systems, landscape lighting, and antennas for wireless animal containment fences.

For these types of systems and circuits to be considered exempt, the following conditions must be met:

(A) The power supplying the installation must be derived from a listed Class 2 power supply;

(B) The installation and termination of line voltage equipment and conductors supplying these systems is performed by appropriately licensed and certified electrical contractors and electricians;

(C) The conductors of these systems do not pass through fire-rated walls, fire-rated ceilings or fire-rated floors in other than residential units; and

(D) Conductors or luminaires are not installed in installations covered by the scope of Article 680 NEC (swimming pools, fountains, and similar installations).

(8) An electrical work permit is required for all installations of telecommunications systems on the customer side of the network demarcation point for projects greater than ten

telecommunications outlets. All backbone installations regardless of size and all telecommunications cable or equipment installations involving penetrations of fire barriers or passing through hazardous locations require permits and inspections. For the purposes of determining the inspection threshold for telecommunications projects greater than ten outlets, the following will apply:

(a) An outlet is the combination of jacks and mounting hardware for those jacks, along with the associated cable and telecommunications closet terminations, that serve one workstation. In counting outlets to determine the inspection threshold, one outlet must not be associated with more than six standard four-pair cables or more than one twenty-five-pair cable. Therefore, installations of greater than sixty standard four-pair cables or ten standard twenty-five-pair cables require permits and inspections. (It is not the intent of the statute to allow large masses of cables to be run to workstations or spaces serving telecommunications equipment without inspection. Proper cable support and proper loading of building structural elements are safety concerns. When considering total associated cables, the telecommunications availability at one workstation may count as more than one outlet.)

(b) The installation of greater than ten outlets and the associated cables along any horizontal pathway from a telecommunications closet to work areas during any continuous ninety-day period requires a permit and inspection.

(c) All telecommunications installations within the residential dwelling units of single-family, duplex, and multifamily dwellings do not require permits or inspections. In residential multifamily dwellings, permits and inspections are required for all backbone installations, all fire barrier penetrations, and installations of greater than ten outlets in common areas.

(d) No permits or inspections are required for installation or replacement of cord and plug connected telecommunications equipment or for patch cord and jumper cross-connected equipment.

(e) Definitions of telecommunications technical terms will come from chapter 19.28 RCW, this chapter, TIA/EIA standards, and NEC.

Inspection and approval.

(9) Requests for inspections.

(a) Requests for inspections must be made no later than three working days after an entity completes its electrical/telecommunications installation or one working day after any part of the installation has been energized, whichever occurs first.

(b) Requests for after hours, weekend inspections, or temporary installations that will be energized for less than 48 hours must be made by contacting the local electrical inspection supervisor at least three working days prior to the requested date of inspection. The portal-to-portal inspection fees required for after hours or weekend inspections are in addition to the cost of the original electrical work permit.

(c) Inspections for annual electrical maintenance permits and annual telecommunications permits may be done on a regular schedule arranged by the permit holder with the department.

(10) Inspections will not be made until all permit fees are paid in full.

Permit - Duration/refunds.

(11) Electrical work permits will expire one year after the date of purchase unless permission is granted by the chief electrical inspector or when the permit is closed or completed by the inspector. Refunds are not available for:

(a) Expired electrical work permits;

(b) Electrical work permit fee items, within the department's jurisdiction, where the electrical installation has begun or an inspection requested for that work; or

(c) The first twenty-five dollars of each permit purchase - Application fee.

All refund requests must be made using the Request for Refund application form.

Permit - Annual telecommunications.

(12) The chief electrical inspector or city that is authorized to do electrical inspections can allow annual permits for the inspection of telecommunications installations to be purchased by a building owner or licensed electrical/telecommunications contractor. The owner's full-time telecommunications maintenance staff, or a licensed electrical/telecommunications contractor(s) can perform the work done under this annual permit. The permit holder is responsible for correcting all installation deficiencies. The permit holder must make available, to the electrical inspector, all records of all the telecommunications work performed and the valid electrical or telecommunications contractor's license numbers for all contractors working under the permit. Upon request, the chief electrical inspector may allow the annual permit to be used for multiple worksites or addresses.

Permit - Annual electrical.

(13) The chief electrical inspector or city that is authorized to do electrical inspections can allow annual permits for the inspection of electrical installations to be purchased by a building owner or licensed electrical contractor. This type of permit is available for commercial/industrial locations employing a full-time electrical maintenance staff or having a yearly maintenance contract with a licensed electrical contractor. Upon request, the chief electrical inspector may allow the annual permit to be used for multiple worksites or addresses.

The permit holder is responsible for correcting all installation deficiencies. The permit holder must make available, to the electrical inspector, all records of all electrical work performed.

This type of electrical permit may be used for retrofit, replacement, maintenance, repair, upgrade, and alterations to electrical systems at a plant or building location. This type of permit does not include new or increased service or new square footage.

Permit - Temporary construction project installations.

(14) For temporary electrical installations, the department will consider a permit applicant to be the owner per RCW 19.28.261 under the conditions below:

Any person, firm, partnership, corporation, or other entity registered as a general contractor under chapter 18.27 RCW will be permitted to install a single electrical service per address for the purposes of temporary power during the construction phase of a project, when all of the following conditions are met:

(a) The installation is limited to the mounting and bracing of a preassembled pole or pedestal mounted service, the installation of a ground rod or ground plate, and the connection of the grounding electrode conductor to the ground rod or plate;

(b) The total service size does not exceed 200 amperes, 250 volts nominal;

(c) The service supplies no feeders;

(d) Branch circuits not exceeding 50 amperes each are permitted, provided such branch circuits supply only receptacles that are either part of the service equipment or are mounted on the same pole;

(e) The general contractor owns the electrical equipment;

(f) The general contractor has been hired by the property owner as the general contractor for the project;

(g) The general contractor must purchase an electrical work permit for the temporary service, request inspection, and obtain approval prior to energizing the service.

Posting of corrections.

(15) Electrical installations found to be not in compliance with approved standards must be corrected within fifteen calendar days of notification by the department as required in RCW 19.28.101(3). The notifications will be posted electronically on the electrical permit inspection results. A printed copy of the correction notification will be posted by the inspector at the job site for permits not purchased electronically.

WAC 296-46B-902 Equipment standards approval, city ordinances.

(1) Any city that does electrical or telecommunications inspections must declare their intent to do inspections by ordinance. See RCW 19.28.010(3) for city inspection and inspector requirements. The department may enforce city electrical or telecommunications ordinances where those governmental agencies do not make inspections under an established program.

Evaluation engineers, testing laboratories, and equipment standards.

(2) As authorized in RCW 19.28.010(1), the department is the sole authority for determining testing laboratory accreditation. See WAC 296-46B-997 and 296-46B-999 for information regarding evaluation engineers, testing laboratories, and equipment standards.

WAC 296-46B-903 Equipment standards.

General.

(1) The standard(s) used, as the basis of electrical product certification, field evaluation, or department approval must be determined by the department to provide an adequate level of safety or define an adequate level of safety performance. Except for the reference of construction requirements to ensure the product can be installed in accordance with the National Electrical Code, field evaluations, by an approved laboratory, must not use the National Electrical Code as standard for product evaluation.

(2) Generally, standards will be:

(a) Developed by a standards developing organization under a method providing for input and consideration of views of industry groups, experts, users, consumers, governmental authorities, and others having broad experience in the electrical products safety field. A standard is used to control the quality and safety of a product;

(b) Compatible with and be maintained current with periodic revisions of applicable national codes and installation standards; and

(c) Approved by the department. The department will evaluate the proposed standard to determine that it provides an adequate level of safety.

(3) All ANSI safety designated electrical product standards may be deemed acceptable for their intended use without further qualification.

(4) If the product safety standard is not ANSI, the standard must be reviewed and approved by the department as an appropriate electrical product safety standard as a part of the field evaluation or department inspection process.

Industrial control panel and industrial utilization equipment inspection.

(5) Specific definitions for this section:

(a) "Engineering evaluation" means a review in accordance with subsection (6)(c) of this section.

(b) "Food processing plants" include buildings or facilities used in a manufacturing process, but do not include:

(i) Municipal or other government facilities;

(ii) Educational facilities or portions thereof;

(iii) Institutional facilities or portions thereof;

(iv) Restaurants;

(v) Farming, ranching, or dairy farming operations;

(vi) Residential uses; or

(vii) Other installations not used for direct manufacturing purposes.

(c) In RCW 19.28.010, "industrial control panel" means a factory or user wired assembly of industrial control equipment such as motor controllers, switches, relays, power supplies, computers, cathode ray tubes, transducers, and auxiliary devices used in the manufacturing process to control industrial utilization equipment. The panel may include disconnecting means and motor branch circuit protective devices. Industrial control panels include only those used in a manufacturing process in a food processing or industrial plant.

(d) "Industrial plants" include buildings or facilities used in a manufacturing process or a manufacturing training facility (e.g., educational shop area in an educational or institutional facility), but do not include:

(i) Municipal or other government facilities;

(ii) Other educational facilities or portions thereof;

(iii) Other institutional facilities or portions thereof;

(iv) Restaurants;

(v) Farming, ranching, or dairy farming operations;

(vi) Residential uses; or

(vii) Other installations not used for direct manufacturing purposes.

(e) "Industrial utilization equipment" means equipment directly used in a manufacturing process in a food processing or industrial plant, in particular the processing, treatment, moving, or packaging of a material. Industrial utilization equipment does not include: Cold storage, warehousing, or similar storage equipment.

(f) "Manufacturing process" means to make or process a raw material or part into a finished product for sale using industrial utilization equipment. A manufacturing process does not include the storage of a product for future distribution (e.g., cold storage, warehousing, and similar storage activity).

(g) "Normal department inspection" is a part of the department electrical inspection process included with the general wiring inspection of a building, structure, or other electrical installation. Normal department inspection will only be made for equipment solely using listed or field evaluated components and wired to the requirements of the NEC. Fees for the normal department inspections required under this chapter are included in the electrical work permit

fee calculated for the installation and are not a separate inspection fee. However, inspection time associated with such equipment is subject to the progress inspection rates in Part C of this chapter.

(h) For the purposes of this section, "panel" means a single box or enclosure containing the components comprising an industrial control panel. A panel does not include any wiring methods connecting multiple panels or connecting a panel(s) and other electrical equipment.

(6) Industrial control panels and industrial utilization equipment will be determined to meet the minimum electrical safety standards for installations by:

(a) Listing or field evaluation of the entire panel or equipment;

(b) Normal department inspection for compliance with codes and rules adopted under this chapter; or

(c) An engineering evaluation review where an engineer, accredited by the department, shows the equipment to be in compliance with an appropriate industrial equipment standard(s).

(i) See WAC 296-46B-997 for the requirements to become an accredited engineer.

(ii) The engineer may review equipment upon request by the equipment owner or the equipment manufacturer.

(iii) The equipment may be reviewed for compliance with the standard(s) before the equipment is located in Washington.

(iv) Appropriate standards are:

(A) NEMA;

(B) ANSI;

(C) NFPA 79;

(D) UL 508A;

(E) International Electrotechnical Commission 60204; or

(F) Their equivalent.

(v) In cases where equipment has been previously reviewed and approved by an accredited engineer or the department and found to meet an appropriate standard(s), the equipment information will be placed on a "reviewed and approved industrial utilization equipment list" established and maintained by the reviewing engineer. The list may be used by a reviewing engineer to aid in evaluating other like equipment. Because standards change over time, equipment will be removed from the list three years after the last successful review. The list will contain the following information:

(A) Equipment manufacturer name;

(B) Model and serial numbers;

(C) Voltage, full load current; phasing; and asymmetrical fault current rating of the equipment;

(D) Accessory items approved for use with the equipment;

(E) Standard(s) to which the equipment was built;

(F) Application of use for the equipment;

(G) Original reviewing engineer's name; and

(H) Date of the original review approval.

(vi) If the engineer uses the "reviewed and approved industrial utilization equipment list," the engineer will visually determine that the equipment being reviewed is the exact same model as equipment on the list.

(vii) Before the engineer's approval label can be applied, the engineer must visually inspect the equipment on site to determine that the equipment is in factory original good condition, has not been modified electrically, and the equipment use is appropriate to the standard(s).

(viii) When the review is completed and the equipment is eligible for approval, the engineer must personally affix a permanent label to the equipment showing:

(A) Engineer's name;

(B) Date of approval;

(C) Equipment serial number;

(D) Equipment voltage, full load current, phasing, and fault interrupting rating; and

(E) The following statement: "This equipment meets appropriate standards for industrial utilization equipment."

(7) The department may authorize, on a case-by-case basis, use of the industrial control panel or equipment, for a period not to exceed six months or as approved by the chief electrical inspector after use is begun, before its final inspection, listing, field evaluation, or engineering evaluation is complete.

WAC 296-46B-906 Inspection fees

To calculate inspection fees, the amperage is based on the conductor ampacity or the overcurrent device rating. The total fee must not be less than the number of progress inspection (one-half hour) units times the progress inspection fee rate from subsection (8) of this section, PROGRESS INSPECTIONS.

The amount of the fee due is calculated based on the fee effective at the date of a department assessed fee (e.g., plan review or fee due) or when the electrical permit is purchased.

(1) **Residential.**

(a) **Single- and two-family residential (New Construction).**

Notes:

(1) Square footage is the area included within the surrounding exterior walls of a building exclusive of any interior courts. (This includes any floor area in an attached garage, basement, or unfinished living space.)

(2) "Inspected with the service" means that a separate service inspection fee is included on the same electrical work permit.

(3) "Inspected at the same time" means all wiring is to be ready for inspection during the initial inspection trip.

(4) An "outbuilding" is a structure that serves a direct accessory function to the residence, such as a pump house or storage building. Outbuilding does not include buildings used for commercial type occupancies or additional dwelling occupancies.

(i) First 1300 sq. ft.	$112.60
Each additional 500 sq. ft. or portion of	$35.90
(ii) Each outbuilding or detached garage - Inspected at the same time as a dwelling unit on the property	$46.80
(iii) Each outbuilding or detached garage - Inspected separately	$74.00
(iv) Each swimming pool - Inspected with the service	$74.00
(v) Each swimming pool - Inspected separately	$112.60
(vi) Each hot tub, spa, or sauna - Inspected with the service	$46.80
(vii) Each hot tub, spa, or sauna - Inspected separately	$74.00

(viii) Each septic pumping system - Inspected with the service $46.80

(ix) Each septic pumping system - Inspected separately $74.00

(b) **Multifamily residential and miscellaneous residential structures, services and feeders (New Construction).**

Each service and/or feeder

Ampacity	Service/Feeder	Additional Feeder
0 to 200	$121.50	$35.90
201 to 400	$151.20	$74.30
401 to 600	$207.70	$103.20
601 to 800	$266.50	$141.90
801 and over	$380.30	$285.10

(c) **Single or multifamily altered services or feeders including circuits.**

(i) Each altered service and/or altered feeder

Ampacity	Service/Feeder
0 to 200	$103.20
201 to 600	$151.20
601 and over	$227.90

(ii) Maintenance or repair of a meter or mast (no alterations to the service or feeder) $55.80

(d) **Single or multifamily residential circuits only (no service inspection).**

Note:

Altered or added circuit fees are calculated per panelboard. Total cost of the alterations in an individual panel should not exceed the cost of a complete altered service or feeder of the same rating, as shown in subsection (1) RESIDENTIAL (c) (table) of this section.

(i) 1 to 4 circuits (see note above) $74.00

(ii) Each additional circuit (see note above) $7.70

(e) **Mobile homes and modular homes.**

(i) Mobile home or modular home service or feeder only $74.00

(ii) Mobile home service and feeder $121.50

(f) **Mobile home park sites and RV park sites.**

Note:

For master service installations, see subsection (2) COMMERCIAL/INDUSTRIAL of this section.

(i) First site service or site feeder $74.00

(ii) Each additional site service; or additional site feeder inspected at the same time as the first service or feeder $46.80

(2) **Commercial/industrial.**

(a) **New service or feeder, and additional new feeders inspected at the same time (includes circuits).**

Note:

For large COMMERCIAL/INDUSTRIAL projects that include multiple feeders, "inspected at the same time" can be interpreted to include additional inspection trips for a single project. The additional inspections must be for electrical work specified on the permit at the time of purchase. The permit fee for such projects must be calculated using this section. However, the total fee must not be less than the number of progress inspection (one-half hour) units times the progress inspection fee rate from subsection (8) PROGRESS INSPECTIONS of this section.

Ampacity	Service/Feeder	Additional Feeder
0 to 100	$121.50	$74.00
101 to 200	$148.00	$94.40
201 to 400	$285.10	$112.60
401 to 600	$332.30	$132.60
601 to 800	$430.00	$180.70
801 to 1000	$524.90	$218.60
1001 and over	$572.70	$305.20

(b) **Altered services/feeders (no circuits).**

(i) Service/feeder

Ampacity	Service/Feeder
0 to 200	$121.50
201 to 600	$285.10
601 to 1000	$430.00
1001 and over	$477.60

(ii) Maintenance or repair of a meter or mast (no alterations to the service or feeder) $103.20

(c) **Circuits only.**

Note:

Altered/added circuit fees are calculated per panelboard. Total cost of the alterations in a panel (or panels) should not exceed the cost of a new feeder (or feeders) of the same rating, as shown in subsection (2) COMMERCIAL/INDUSTRIAL (2)(a)(table) above.

(i) First 5 circuits per branch circuit panel $94.40

(ii) Each additional circuit per branch circuit panel $7.70

(d) **Over 600 volts surcharge per permit.** $94.40

(3) **Temporary service(s).**

Notes:

(1) See WAC **296-46B-590** for information about temporary installations.

(2) Temporary stage or concert inspections requested outside of normal business hours will be subject to the portal-to-portal hourly fees in subsection (11) OTHER INSPECTIONS. The fee for such after hours inspections will be the greater of the fee from this subsection or the portal-to-portal fee.

Temporary services, temporary stage or concert productions.

Ampacity	Service/Feeder	Additional Feeder
0 to 60	$64.90	$33.20
61 to 100	$74.00	$35.90
101 to 200	$94.40	$46.80
201 to 400	$112.60	$55.90
401 to 600	$151.20	$74.00
601 and over	$171.50	$85.30

(4) **Irrigation machines, pumps, and equipment.**

Irrigation machines.

(a) Each tower - When inspected at the same time as a service and feeder from (2) COMMERCIAL/INDUSTRIAL $7.70

(b) Towers - When not inspected at the same time as a service and feeder - 1 to 6 towers $112.60

(c) Each additional tower $7.70

(5) **Miscellaneous - Commercial/industrial and residential.**

(a) **A Class 2 low-voltage thermostat** and its associated cable controlling a single piece of utilization equipment or a single furnace and air conditioner combination.

(i) First thermostat $55.90

(ii) Each additional thermostat inspected at the same time as the first $17.20

(b) **Class 2 or 3 low-voltage systems and telecommunications systems.** Includes all telecommunications installations, fire alarm, nurse call, energy management control systems, industrial and automation control systems, lighting control systems, and similar Class 2 or 3 low-energy circuits and equipment not included in WAC **296-46B-908** for Class B work.

(i) First 2500 sq. ft. or less $64.90

(ii) Each additional 2500 sq. ft. or portion thereof $17.20

(c) **Signs and outline lighting.**

(i) First sign (no service included) $55.90

(ii) Each additional sign inspected at the same time on the same building or structure $26.20

(d) **Berth at a marina or dock.**

Note:

Five berths or more will be permitted to have the inspection fees based on appropriate service and feeder fees from section (2) COMMERCIAL/INDUSTRIAL above.

(i) Berth at a marina or dock $74.00

(ii) Each additional berth inspected at the same time $46.80

(e) **Yard pole, pedestal, or other meter loops only.**

(i) Yard pole, pedestal, or other meter loops only $74.00

(ii) Meters installed remote from the service equipment and inspected at the same time as a service, temporary service or other installations $17.20

(f) **Inspection appointment requested for outside of normal working hours.**

Regular fee plus surcharge of: $141.90

(g) **Generators.**

Note:

Permanently installed generators: Refer to the appropriate residential or commercial new/altered service or feeder section.

Portable generators: Permanently installed transfer equipment for portable generators $103.20

(h) **Electrical - Annual permit fee.**

Note:

See WAC **296-46B-901**(13).

For commercial/industrial location employing full-time electrical maintenance staff or having a yearly maintenance contract with a licensed electrical contractor. Note, all yearly maintenance contracts must detail the number of contractor electricians necessary to complete the work required under the contract. This number will be used as a basis for calculating the appropriate fee. Each inspection is based on a 2-hour maximum.

	Inspections	**Fee**
1 to 3 plant electricians	12	$2,735.80
4 to 6 plant electricians	24	$5,474.70
7 to 12 plant electricians	36	$8,211.90
13 to 25 plant electricians	48	$10,950.90
More than 25 plant electricians	52	$13,689.90

(i) **Telecommunications - Annual permit fee.**

Notes:

(1) See WAC **296-46B-901**(12).

(2) Annual inspection time required may be estimated by the purchaser at the rate for "OTHER INSPECTIONS" in this section, charged portal-to-portal per hour.

For commercial/industrial location employing full-time telecommunications maintenance staff or having a yearly maintenance contract with a licensed electrical/telecommunications contractor.

2-hour minimum $226.00

Each additional hour, or portion thereof, of portal-to-portal inspection time $112.60

(j) **Permit requiring ditch cover inspection only.**

Each 1/2 hour, or portion thereof $55.90

(k) **Cover inspection for elevator/conveyance installation. This item is only available to a licensed/registered elevator contractor.** $94.40

(6) **Carnival inspections.**

(a) **First carnival field inspection each calendar year.**

(i) Each ride and generator truck $26.20

(ii) Each remote distribution equipment, concession, or gaming show $7.70

(iii) If the calculated fee for first carnival field inspection above is less than **$120.30**, the minimum inspection fee will be: $141.90

(b) **Subsequent carnival inspections.**

(i) First 10 rides, concessions, generators, remote distribution equipment, or gaming show $141.90

(ii) Each additional ride, concession, generator, remote distribution equipment, or gaming show	$7.70
(c) **Concession(s) or ride(s) not part of a carnival.**	
(i) First field inspection each year of a single concession or ride, not part of a carnival	$112.60
(ii) Subsequent inspection of a single concession or ride, not part of a carnival	$74.00
(7) **Trip fees.**	
(a) Requests by property owners to inspect existing installations. (This fee includes a maximum of one hour of inspection time. All inspection time exceeding one hour will be charged at the rate for progressive inspections.)	$112.60
(b) Submitter notifies the department that work is ready for inspection when it is not ready.	$55.90
(c) Additional inspection required because submitter has provided the wrong address or incomplete, improper or illegible directions for the site of the inspection.	$55.90
(d) More than one additional inspection required to inspect corrections; or for repeated neglect, carelessness, or improperly installed electrical work.	$55.90
(e) Each trip necessary to remove a noncompliance notice.	$55.90
(f) Corrections that have not been made in the prescribed time, unless an exception has been requested and granted.	$55.90
(g) Installations that are covered or concealed before inspection.	$55.90
(8) **Progress inspections.**	

Note:
The fees calculated in subsections (1) through (6) of this section will apply to all electrical work. This section will be applied to a permit where the permit holder has requested additional inspections beyond the number supported by the permit fee calculated at the rate in subsections (1) through (6) of this section.

On partial or progress inspections, each 1/2 hour.	$55.90
(9) **Plan review.**	
(a) Plan review fee is 35% of the electrical work permit fee as determined by WAC 296-46B-906.	35%
(b) Plan review submission fee .	$94.40
(c) Supplemental submissions of plans per hour or fraction of an hour of review time.	$112.60
(d) Plan review handling fee.	$26.20
(10) **Out-of-state inspections.**	
(a) Permit fees will be charged according to the fees listed in this section.	
(b) Travel expenses:	

All travel expenses and per diem for out-of-state inspections are billed following completion of each inspection(s). These expenses can include, but are not limited to: Inspector's travel time, travel cost and per diem at the state rate. Travel time is hourly based on the rate in subsection (11) of this section.

(11) **Other inspections.**	
Inspections not covered by above inspection fees must be charged portal-to-portal per hour:	$112.60
(12) **Variance request processing fee.**	
Variance request processing fee. This fee is nonrefundable once the transaction has been validated.	$112.60
(13) **Class B basic electrical work labels.**	
(a) Block of 20 Class B basic electrical work labels (not refundable).	$309.70
(b) Reinspection of Class B basic electrical work to assure that corrections have been made (per 1/2 hour timed from leaving the previous inspection until the reinspection is completed). See WAC **296-46B-908**(5).	$55.90
(c) Reinspection of Class B basic electrical work because of a failed inspection of another Class B label (per 1/2 hour from previous inspection until the reinspection is completed). See WAC **296-46B-908**(5).	$55.90
(14) **Provisional electrical work permit labels.**	

Block of 20 provisional electrical work permit labels. $309.70

PART D - PROVISIONAL PERMITS

WAC 296-46B-907 Provisional permits.

Provisional electrical work permit - Use/duration/refunds.

(1) Only licensed electrical or telecommunications contractors can use provisional electrical work permits.

(2) If a provisional electrical work permit label is used, the following requirements must be met:

(a) Prior to beginning the work, the certified electrician or telecommunications worker performing the installation must affix the provisional electrical work permit label to the building, structure, or on the cover of the panelboard, overcurrent device, or telecommunications equipment supplying the circuit or equipment.

(b) The job site and contractor portion of the label must be completely filled out.

(c) The label must be filled in using sunlight and weather resistant ink.

(d) The contractor must return the contractor's portion of the label to the department of labor and industries, electrical section office having jurisdiction for the inspection, within two working days after the job site portion of the label is affixed. Either receipt by department of labor and industries or postmark to a valid department of labor and industries electrical address is acceptable for meeting this requirement.

(3) Refunds are not available for provisional electrical work permit labels.

(4) Provisional electrical work permit labels will be sold in blocks of twenty.

(5) Any contractor purchasing a provisional electrical work permit label may be audited for compliance with the provisions for purchasing, inspection, reporting of installations, and any other requirement of usage.

(6) An electrical work permit must be obtained within two working days after posting the provisional work permit label. See WAC 296-46B-901 (7)(b).

PART E - CLASS B PERMITS

WAC 296-46B-908 Class B permits.

Class B electrical work permit - Use.

(1) The Class B basic electrical random inspection process (Class B process) may only be used by:

(a) Licensed electrical/telecommunication contractors; or

(b) Health care, commercial, or industrial facilities using an employee(s) who is an appropriately certified electrician(s) after requesting, in writing, and receiving permission from the chief electrical inspector.

Each entity doing work must use a separate label.

(2) The Class B random inspection process is only available if the label is validated and the label or label number is posted before beginning the work.

(a) For Class B labels obtained after February 28, 2013:

(i) Prior to, or immediately upon posting the Class B label/number, the purchaser must use the department's online Class B system to enter the job site information for an unused Class B label obtained by the purchaser. If the posting occurs on a weekend or a federal/state holiday, the purchaser must use the online system to enter the information no later than the first business day after posting the label/number;

(ii) The person identified as the installer on the Class B label must post the Class B label or label number, in a conspicuous permanent manner, at the:

(A) Main service/feeder location supplying the structure or system; or

(B) Purchaser's equipment, or on the equipment conductors if the equipment is not in place.

(iii) The Class B label is valid immediately upon the purchaser completing the job site information in the department's online Class B system, and posting of the Class B label or label number per (a)(ii) of this subsection.

(b) For Class B labels obtained before March 1, 2013:

(i) The purchaser must fully enter the job site information on the job site and contractor portions of the Class B label.

(ii) The person identified as the installer on the Class B label must post the completed job site copy, in a conspicuous permanent manner, at the:

(A) Main service/feeder location supplying the structure or system;

(B) Purchaser's equipment, or on the conductors if the equipment is not available.

(iii) The purchaser must return the contractor copy to the Department of Labor and Industries, Electrical Section, Chief Electrical Inspector, P.O. Box 44460, Olympia, WA 98504-4460 within 15 working days after the job site portion of the Class B installation label is affixed.

(iv) The Class B label is valid immediately upon posting on the job site.

(3) Class B labels will be sold in blocks and are nonrefundable and nontransferable.

(4) Class B label installations will be inspected on a random basis as determined by the department.

(5) A progress inspection fee is required for any inspection required when a correction(s) is issued as a result of the inspection of a Class B label.

(6) Any entity using the Class B process may be audited for compliance with the provisions for purchasing, inspection, reporting of installations, and any other requirement of usage.

(7) A separate label is required for each line item listed below in subsection (10) of this section. For example, if the work includes an item under subsection (10)(a) and (b)(i) of this section, two labels are required.

(8) An entity using a Class B basic inspection label is restricted to using no more than two labels per week per job site.

(9) All Class B work must be completed within 15 days after the label is validated. If the work is not completed, another Class B may be posted.

Except that, in a one- or two-family residential structure, a label is valid for 120 days after the label is validated, so long as all work described on the label is performed by the purchaser.

(10) Class B work includes the following:

(a) Extension of not more than one branch electrical circuit limited to 120 volts and 20 amps each where:

(i) No cover inspection is necessary. For the purposes of this section, cover inspection does not include work covered by any surface that may be removed for inspection without damaging the surface; and

(ii) The extension does not supply more than two outlets as defined by the NEC.

(b) Single like-in-kind replacement of:

(i) A motor larger than 10 horsepower; or

(ii) The internal wiring of a furnace, air conditioner, refrigeration unit or household appliance; or

(iii) An electric/gas/oil furnace not exceeding 240 volts and 100 amps and associated Class 2 low voltage wiring (i.e., altered and/or new low-voltage control wiring from the furnace to an existing and/or new thermostat, heat pump, air conditioner, condenser, etc.), when the furnace is connected to an existing branch circuit. For the purposes of this section, a boiler is not a furnace; or

(iv) An individually controlled electric room heater (e.g., baseboard, wall, fan forced air, etc.), air conditioning unit, heat pump unit, or refrigeration unit not exceeding 240 volts, 40 minimum circuit amps and associated Class 2 low voltage wiring when the unit is connected to an existing branch circuit; or

(v) Circuit modification required to install not more than five residential load control devices in a residence where installed as part of an energy conservation program sponsored by an electrical utility and where the circuit does not exceed 240 volts and 40 amps; or

(vi) A single, line-voltage flexible supply whip associated with (b)(i), (iii), or (iv) of this subsection, not over six feet in length, provided there are no modifications to the branch circuit/feeder load being supplied by the whip. May be done on the same Class B label with the replacement unit if done at the same time.

(c) The following low voltage systems:

(i) Repair and replacement of devices not exceeding 100 volt-amperes in Class 2, Class 3, or power limited low voltage systems in one- and two-family dwellings; or

(ii) Repair and replacement of devices not exceeding 100 volt-amperes in Class 2, Class 3, or power limited low voltage systems in other buildings, provided the equipment is not for fire alarm or nurse call systems and is not located in an area classified as hazardous by the NEC; or

(iii) The installation of Class 2 or 3 device(s) or wiring for thermostat, audio, security, burglar alarm, intercom, amplified sound, public address, or access control systems where the installation does not exceed 20 devices or 5,000 square feet. This does not include fire alarm, nurse call, lighting control, industrial automation/control or energy management systems; or

(iv) Telecommunications cabling and equipment requiring inspection in RCW 19.28.470 where the installation does not exceed 20 devices or 5,000 square feet;

(d) The replacement of not more than 10 standard receptacles with GFCI, AFCI, or dual function AFCI/GFCI receptacles;

(e) The conversion of not more than 10 snap switches to dimmers or occupancy sensors for the use of controlling a luminaire(s) conversion;

(f) The like-in-kind replacement of a maximum of 20: Paddle fans, luminaires not exceeding 277 volts and 20 amperes; snap switches, dimmers, receptacle outlets, line voltage

thermostats, heating elements, luminaire ballasts, or drivers/power supplies for single LED luminaires;

(g) The replacement of not more than two luminaires with paddle fans if a listed fan box has been previously installed to support the luminaires;

(h) The replacement of not more than four batteries rated not larger than 150 amp hours each that supply power to a single unit of equipment (e.g., uninterruptable power supply, photovoltaic storage system, control panel, etc.);

(i) The installation or repair of equipment powered by a stand-alone solar photovoltaic source where the:

(i) Electrical equipment requires no field assembly except for the attachment and electrical connection of the solar photovoltaic source to the equipment, the installation and attachment to a grounding electrode, and the placement of the equipment on a pad, pole, or other structure;

(ii) Solar photovoltaic source and the equipment operates at less than 15 volts DC;

(iii) Solar photovoltaic source is the only source of external power; and

(iv) Equipment and the solar photovoltaic source are appropriately labeled as a single unit. The label must be by an approved electrical testing laboratory or for equipment used for traffic control labeled according to WAC 296-46B-010(20).

(j) The installation or replacement of a single electric sign on an existing single 120-volt, 20-amp maximum branch circuit;

(k) The like-in-kind replacement of output cables consisting of a length of flexible EV cable and an electric vehicle connector when connected to fixed in place electric vehicle supply equipment.

(11) Class B basic electrical work does not include any work in:

(a) Areas classified as Class I, Class II, Class III, or Zone locations per NEC 500; or

(b) Areas regulated by NEC 517 or 680; or

(c) Any work where electrical plan review is required; or

(d) Fire alarm, nurse call, lighting control, industrial automation/control or energy management systems.

PART F – ADMINISTRATIVE

WAC 296-46B-909 Electrical/telecommunications contractor's license, administrator certificate and examination, master electrician certificate and examination, electrician certificate and examination, copy, and miscellaneous fees

Notes: (1) The department will deny renewal of a license, certificate, or permit if an individual owes

money as a result of an outstanding final judgment(s) to the department or is in revoked status. The department will deny application of a license, certificate, or permit if an individual is in suspended status or owes money as a result of an outstanding final judgment(s) to the electrical program.

(2) Certificates may be prorated for shorter renewal periods in one-year increments. Each year or part of a year will be calculated to be one year.

(3) The amount of the fee due is calculated based on the fee effective at the date payment is made.

(1) **General or specialty contractor's license per 24-month period. (Nonrefundable after license has been issued.)**	
(a) **Initial application or renewal made in person, by mail, or by fax**	$332.30
(b) **Renewal fully completed using the online web process**	$287.50
(c) **Reinstatement of a general or specialty contractor's license after a suspension**	$67.20
(2) **Master electrician/administrator/electrician/trainee certificate.**	
(a) **Examination application (nonrefundable)**	
Administrator certificate examination application. (Required only for department administered examinations.) (Not required when testing with the department's contractor.)	$41.50
(b) **Examination fees (nonrefundable)**	
Note: Normal examination administration is performed by a state authorized contractor. The fees for such examinations are set by contract with the department. For written examinations administered by the department, use the following fee schedule.	
(i) Master electrician or administrator first-time examination fee (when administered by the department)	$100.20
(ii) Master electrician or administrator retest examination fee (when administered by the department)	$117.40
(iii) Journey level or specialty electrician examination fee (first test or retest when administered by the department)	$75.40
(iv) Certification examination review fee	$155.40
(c) **Original certificates (nonrefundable after certificate has been issued)**	
(i) Electrical administrator original certificate (except **09** telecommunication)	$150.30
(ii) Telecommunications administrator original certificate (for **09** telecommunications)	$99.90
(iii) Master electrician exam application (includes original certificate and application processing fee) **($41.40 is nonrefundable after application is submitted)**	$192.10
(iv) Journey level, specialty, or reciprocal electrician application (includes original certificate and application processing fee) **($41.40 is nonrefundable after application is submitted)**	$107.60
(v) Training certificate	
(A) Initial application made in person, by mail, or by fax	$52.60
(B) Initial application fully completed online using the online web process	$45.20
(C) 0% supervision modified training certificate. Includes trainee update of hours (i.e., submission of affidavit of experience) **($63.80 is nonrefundable after application is submitted)**	$96.00
(D) 75% supervision modified training certificate.	$63.80
(E) Unsupervised training certificate as allowed by	$31.50

RCW 19.28.161 (4)(b).

(d) **Certificate renewal (nonrefundable)**	
(i) Master electrician or administrator certificate renewal	
(A) Renewal made in person, by mail, or by fax	$189.90
(B) Renewal fully completed using the online web process	$165.00
(ii) Telecommunications **(09)** administrator certificate renewal	
(A) Renewal made in person, by mail, or by fax	$126.50
(B) Renewal fully completed using the online web process	$109.00
(iii) Late renewal of master electrician or administrator certificate	
(A) Renewal made in person, by mail, or by fax	$379.80
(B) Renewal fully completed using the online web process	$330.00
(iv) Late renewal of telecommunications **(09)** administrator certificate	
(A) Renewal made in person, by mail, or by fax	$253.10
(B) Renewal fully completed using the online web process	$218.20
(v) Journey level or specialty electrician certificate renewal	
(A) Renewal made in person, by mail, or by fax	$99.90
(B) Renewal fully completed using the online web process	$87.00
(vi) Late renewal of journey level or specialty electrician certificate	
(A) Renewal made in person, by mail, or by fax	$199.90
(B) Renewal fully completed using the online web process	$174.00
(vii) Trainee update of hours submitted more than 30 days after expiration of a training certificate	$63.80
(viii) Trainee certificate renewal	
(A) Renewal made in person, by mail, or by fax	$63.80
(B) Renewal fully completed using the online web process when the affidavit of experience is submitted per WAC 296-46B-942 (8)(d)	$55.60
(ix) Late trainee certificate renewal	
(A) Renewal made in person, by mail, or by fax	$89.60
(B) Renewal fully completed using the online web process	$78.00
(e) **Certificate - Reinstatement (nonrefundable)**	
(i) Reinstatement of a suspended master electrician or administrator's certificate (in addition to normal renewal fee)	$67.20
(ii) Reinstatement of suspended journey level, or specialty electrician certificate (in addition to normal renewal fee)	$31.50
(f) **Assignment/unassignment of master electrician/administrator designation (nonrefundable)**	$49.80
(3) **Certificate/license.**	
(a) Replacement for lost or damaged certificate/license. (Nonrefundable.)	$21.70
(b) Optional display quality General Master Electrician certificate.	$35.40
(4) **Continuing education courses or instructors. (Nonrefundable.)**	
(a) If the course or instructor review is performed by the electrical board or the department	
The course or instructor review	$63.90
(b) If the course or instructor review is contracted out by the electrical board or the department	
(i) Continuing education course or instructor submittal and approval (per course or instructor)	As set in contract
(ii) Applicant's request for review, by the chief electrical inspector, of the contractor's denial	$155.80
(5) **Copy fees. (Nonrefundable.)**	
Certified copy of each document (maximum charge per file):	$70.70

(a) First page:	$31.50
(b) Each additional page:	$2.40

(6) **Training school program review fees. Initial training school program review fee. (Nonrefundable.)**

(a) Initial training school program review fee submitted for approval. Valid for three years or until significant changes in program content or course length are implemented (see WAC **296-46B-971**(4)).	$736.80
(b) Renewal of training school program review fee submitted for renewal. Valid for 3 years or until significant changes in program content or course length are implemented (see WAC **296-46B-971**(4)).	$368.30

WAC 296-46B-911 Electrical testing laboratory and engineer accreditation fees

The amount of the fee due is calculated based on the fee effective at the date payment is made.

Electrical testing laboratory	
Initial filing fee: (Nonrefundable)	$700.60
Initial accreditation fee:	
1 product category	$350.20
Each additional category for the next 19 categories	$139.90 each
Maximum for 20 categories or more	$3,013.10
Renewal fee: (Nonrefundable)	50% of initial filing fee
Renewal of existing accreditations	
Each additional category for the next 19 categories	$139.90 each
Maximum for 20 categories or more	$3,013.10
Engineer for evaluating industrial utilization equipment	
Initial filing fee: (Nonrefundable)	$700.60
Renewal fee: (Nonrefundable)	50% of initial filing fee

WAC 296-46B-915 Civil penalty schedule.

Notes: Each day that a violation occurs on a job site may be a separate offense.

Once a violation of chapter 19.28 RCW or chapter 296-46B WAC becomes a final judgment, any additional violation within three years becomes a "second" or "additional" offense subject to an increased penalty as set forth in the following tables.

In case of serious noncompliance or a serious violation of the provisions of chapter 19.28 RCW or as described in WAC 296-46B-990, the department may double the penalty amount, up to ten thousand dollars shown in subsections (1) through (14) of this section.

A person, firm, partnership, corporation or other entity who violates a provision of chapter 19.28 RCW or chapter 296-46B WAC is liable for a civil penalty based upon the following schedule.

(1) **Offering to perform, submitting a bid for, advertising, installing or maintaining cables, conductors or equipment:**

(a) That convey or utilize electrical current without having a valid electrical contractor's license; or

(b) Used for information generation, processing, or transporting of signals optically or electronically in telecommunications systems without having a valid telecommunications contractor's license.

First offense:	$1,000
Second offense:	$2,000
Third offense:	$3,000
Each offense thereafter:	$10,000

(2) **Employing an individual for the purposes of chapter 19.28 RCW who does not possess a valid certificate of competency or training certificate to do electrical work.**

First offense:	$250
Each offense thereafter:	$500

(3) **Performing electrical work without having a valid certificate of competency or electrical training certificate.**

(a) Failing to visibly display a certificate (must possess a valid, active certificate).

First offense:	$50
Each offense thereafter:	$100

(b) Performing electrical work while not possessing a valid certificate or working outside the scope of a certificate.

First offense:	$250
Each offense thereafter:	$500

(4) **Employing electricians and electrical trainees for the purposes of chapter 19.28 RCW in an improper ratio. Contractors found to have violated this section three times in a three-year period must be the subject of an electrical audit in accordance with WAC 296-46B-975.**

First offense:	$250
Each offense thereafter:	$500

(5) **Failing to provide proper supervision to an electrical trainee as required by chapter 19.28 RCW. Contractors found to have violated this section three times in a three-year period must be the subject of an electrical audit in accordance with WAC 296-46B-975.**

First offense:	$250
Each offense thereafter:	$500

(6) **Working as an electrical trainee without proper supervision as required by chapter 19.28 RCW.**

First offense:	$50
Second offense:	$250
Each offense thereafter:	$500

(7) **Offering, bidding, advertising, or performing electrical or telecommunications installations, alterations or maintenance outside the scope of the firm's specialty electrical or telecommunications contractors license.**

First offense:	$500
Second offense:	$1,500
Third offense:	$3,000
Each offense thereafter:	$6,000

(8) **Selling or exchanging electrical equipment associated with spas, hot tubs, swimming pools or hydromassage bathtubs which are not listed by an approved laboratory.**

First offense:	$500
Second offense:	$1,000
Each offense thereafter:	$2,000

Definition:
The sale or exchange of electrical equipment associated with hot tubs, spas, swimming pools or hydromassage bathtubs includes to: "Sell, offer for sale, advertise, display for sale, dispose of by way of

gift, loan, rental, lease, premium, barter or exchange."

(9) **Covering or concealing installations prior to inspection.**

First offense:	$250
Second offense:	$1,000
Each offense thereafter:	$2,000

(10) **Failing to make corrections within fifteen days of notification by the department.**

Exception:
Where an extension has been requested and granted, this penalty applies to corrections not completed within the extended time period.

First offense:	$250
Second offense:	$1,000
Each offense thereafter:	$2,000

(11) **Failing to get an inspection or obtain an electrical/telecommunications work permit or post a provisional electrical work permit label prior to beginning the electrical/telecommunications installation or alteration.**

Exception:
In cases of emergency repairs, for owners, to existing electrical/telecommunications systems, this penalty will not be charged if the permit is obtained and posted no later than the business day following beginning work on the emergency repair.

(a) Standard/provisional permit offenses:

First offense:	$250
Second offense:	$1,000
Each offense thereafter:	$2,000

(b) Class B offenses:

Failure to post a Class B label or number for Class B eligible work:

First offense:	$100
Second offense:	$250
Each offense thereafter:	$1,000

(c) For other Class B offenses:

First offense:	$100
Second offense:	$250
Each offense thereafter:	$1,000

(12) **Violating chapter 19.28 RCW duties of the electrical/telecommunications administrator or master electrician.**

(a) Failing to be a member of the firm or a supervisory employee and must be available during working hours to carry out the duties of an administrator or master electrician.

First offense:	$1,000
Second offense:	$1,500
Each offense thereafter:	$3,000

(b) Failing to ensure that all electrical work complies with the electrical installation laws and rules of the state.

First offense:	$100
Second offense:	$250
Third offense:	$1,000
Each offense thereafter:	$3,000

(c) Failing to ensure that the proper electrical safety procedures are used.

First offense:	$500
Second offense:	$1,500
Each offense thereafter:	$3,000

(d) Failing to ensure that inspections are obtained and that all electrical labels, permits, and certificates required to perform electrical work are used.

Standard/provisional permit offenses:

First offense:	$250
Each offense thereafter:	$500

Class B offenses:

First offense:	$100
Second offense:	$250
Each offense thereafter:	$1,000

(e) Failing to ensure that all electrical licenses, required to perform electrical work are used (i.e., work performed must be in the allowed scope of work for the contractor).

First offense:	$500
Second offense:	$1,500
Third offense:	$3,000
Each offense thereafter:	$6,000

(f) Failing to see that corrective notices issued by an inspecting authority are complied with within fifteen days.

Exception: Where an extension has been requested and granted, this penalty applies to corrections not completed within the extended time period.

First offense:	$250
Second offense:	$1,000
Each offense thereafter:	$2,000

(g) Failing to notify the department in writing within ten days if the master electrician or administrator terminates the relationship with the electrical contractor.

First offense:	$500
Second offense:	$1,000
Each offense thereafter:	$3,000

(13) **Causing or failing to correct a serious violation.**

A serious violation is a violation of chapter 19.28 RCW or 296-46B WAC that creates a hazard of fire or a danger to life safety.

First offense:	$1,000
Second offense:	$3,000
Each offense thereafter:	$5,000

(14) **Violating any of the provisions of chapter 19.28 RCW or chapter 296-46B WAC which are not identified in subsections (1) through (12) of this section.**

(a) RCW 19.28.161 through 19.28.271 and the rules developed pursuant to them.

First offense:	$250
Each offense thereafter:	$500

(b) All other chapter 19.28 RCW provisions and the rules developed pursuant to them.

First offense:	$250

Second offense:	$750
Each offense thereafter:	$2,000

WAC 296-46B-920 Electrical/telecommunications license/certificate types and scope of work.

(1) **General electrical (01):** A general electrical license and/or certificate encompasses all phases and all types of electrical and telecommunications installations and minor plumbing under RCW 18.106.150. For the purposes of RCW 18.106.150, the like-in-kind replacement includes the appliance or any component part of the appliance (e.g., such as, but not limited to, the thermostat in a water heater).

Specialties.

(2) All specialties listed in this subsection may perform the electrical work described within their specific specialty as allowed by the occupancy and location described within the specialty's scope of work. Except for residential (02), the scope of work for these specialties does not include plumbing work regulated under chapter 18.106 RCW. See RCW 18.106.150 for plumbing exceptions for the residential (02) specialty. For the purposes of RCW 18.106.150, the like-in-kind replacement includes the appliance or any component part of the appliance (e.g., such as, but not limited to, the thermostat in a water heater). **Specialty** (limited) electrical licenses and/or certificates are as follows:

(a) **Residential (02):** Limited to the telecommunications, low voltage, and line voltage wiring of one- and two-family dwellings, or multifamily dwellings of types III, IV or V construction when there are not more than six stories of multifamily dwellings of types III, IV or V construction above grade or above types I or II construction. All line voltage wiring for receptacle outlets and lighting outlets required by the National Electrical Code (NFPA 70) adopted under WAC 296-46B-010 is limited to nonmetallic sheathed cable, except for: Wiring subject to physical damage, wiring embedded in masonry or concrete, wiring buried below grade or located in a wet location, wiring to unfinished space areas adaptable to future dwelling unit living areas, or wiring where nonmetallic sheathed cable is not allowed by installation standards adopted under this chapter.

(i) This specialty also includes the wiring for ancillary structures located on the same property and under the same ownership as the dwelling structure(s) such as, but not limited to: Appliances, equipment, swimming pools, septic pumping systems, domestic water systems, limited energy systems (e.g., doorbells, intercoms, fire alarm, burglar alarm, energy control, HVAC/refrigeration, etc.), multifamily complex offices/garages, site lighting when supplied from the residence or ancillary structure, and other structures directly associated with the functionality of the residential units.

(ii) This specialty does not include wiring of:

(A) Any portion of any occupancy of types I or II construction; or

(B) Occupancies defined in WAC 296-46B-900(1), or commercial occupancies such as: Motels, hotels, offices, assisted living facilities, or stores; or

(C) Services, generators, HVAC/refrigeration equipment, fire pumps or other equipment that serve other than one- and two-family dwellings, or multifamily dwellings of types III, IV, or V construction or ancillary structures, or facilities or equipment used primarily for commercial

purposes except those directly associated with the functionality of multifamily complex residential units; or

(D) Interconnected electric power production sources not connected to equipment that supplies one- and two-family dwellings, or multifamily dwellings of types III, IV or V construction, or ancillary structures; or

(E) Any portion of wiring for conveyances regulated under chapter 70.87 RCW serving more than one residential dwelling unit.

(iii) For the purposes of this section, classification of types of construction are as determined by the local building official.

(iv) See RCW 18.106.150 for plumbing exceptions for the residential (02) specialty.

(b) **Pump and irrigation (03):** Limited to the electrical connection of circuits, feeders, controls, low voltage, related telecommunications, and services to supply: Domestic water systems and public water systems include but are not limited to pumps, pressurization, filtration, treatment, or other equipment and controls, and irrigation water pumps, circular irrigating system's pumps and pump houses.

This specialty may also perform the work defined in (c) of this subsection.

Also see RCW 18.106.010 (14)(c).

(c) **Domestic pump (03A):** Limited to the extension of a branch circuit, which is supplied and installed by others, to signaling circuits, motor control circuits, motor control devices, and pumps which do not exceed 7 1/2 horsepower at 250 volts AC single phase input power, regardless of motor controller output or motor voltage/phase, used in residential potable water or residential sewage disposal systems. Domestic water systems and public water systems include but are not limited to pumps, pressurization, filtration, treatment, or other equipment and controls.

Also see RCW 18.106.010 (14)(c).

(d) **Signs (04):** Limited to placement and connection of signs and outline lighting, the electrical supply, related telecommunications, controls and associated circuit extensions thereto; and the installation of a maximum 60 ampere, 120/240 volt single phase service to supply power to a remote sign only. This specialty may service, maintain, repair, or install retrofit kits within housings of existing exterior luminaires that are mounted on a pole or other structure with like-in-kind or retrofit kit components.

(i) Electrical licensing/certification is not required to:

(A) Clean the nonelectrical parts of an electric sign;

(B) Form or pour a concrete pole base used to support a sign;

(C) Operate machinery used to assist an electrician in mounting an electric sign or sign supporting pole; or

(D) Assemble the structural parts of a billboard.

(ii) Electrical licensing/certification is required to: Install, modify, or maintain a sign, sign supporting pole, sign face, sign ballast, lamp socket, lamp holder, disconnect switch, or any other part of a listed electric sign.

(e) **Limited energy system (06):** Limited to the installation, repair, replacement, and maintenance of signaling and power limited circuits and related equipment. This specialty is restricted to low-voltage circuits. This specialty includes telecommunications, HVAC/refrigeration low-voltage wiring, fire protection signaling systems, intrusion alarms, energy management and control systems, industrial and automation control systems, lighting control systems, commercial

and residential amplified sound, public address systems, and such similar low-energy circuits and equipment in all occupancies and locations.

(i) For the purposes of this section, when a line voltage connection is removed and reconnected to a replacement component located inside the control cabinet, the replacement must be like-in-kind or replaced using the equipment manufacturer's authorized replacement component. The line voltage circuit is limited to 120 volts 20 amps maximum and must have a means of disconnect.

(ii) The limited energy systems (06) specialty may repair or replace line voltage connections terminated inside the cabinet to power supplies internal to the low voltage equipment provided there are no modifications to the characteristics of the branch circuit/feeder load being supplied by the circuit.

(iii) The limited energy systems (06) specialty may not replace or modify the line voltage circuit or cabling or alter the means of connection of the line voltage circuit to the power supply or to the control cabinet.

Limited energy electrical contractors may perform all telecommunications work under their specialty **(06)** electrical license and administrator's certificate.

(f) **HVAC/refrigeration system specialties:**

(i) See WAC 296-46B-100 for specific HVAC/refrigeration definitions.

(ii) For the purposes of this section when a component is replaced, the replacement must be like-in-kind or made using the equipment manufacturer's authorized replacement component.

(iii) HVAC/refrigeration **(06A)**:

(A) The (06A) specialty is not limited by voltage, phase, or amperage. No unsupervised electrical trainee can install, repair, replace, or maintain any part of a HVAC/refrigeration system that contains any circuit rated over 600 volts whether the circuit is energized or deenergized. This specialty may:

(I) Install, repair, replace, and maintain HVAC/refrigeration: Telecommunications, Class 2 low-voltage control circuit wiring/components in all residential occupancies;

(II) Install, repair, replace, and maintain line voltage components within HVAC/refrigeration equipment. Such line voltage components include product illumination luminaires installed within and powered from the HVAC/refrigeration system (e.g., reach-in beverage coolers, frozen food cases, produce cases, etc.) and new or replaced factory authorized accessories such as internally mounted outlets;

(III) Repair, replace, or maintain the internal components of the HVAC/refrigeration equipment disconnecting means or controller so long as the disconnecting means or controller is not located within a motor control center or panelboard;

(IV) Install, repair, replace, and maintain short sections of raceway to provide physical protection for low-voltage cables. For the purposes of this section a short section cannot mechanically interconnect two devices, junction boxes, or other equipment or components; and

(V) Repair, replace, or maintain line voltage flexible supply whips not over six feet in length, provided there are no modifications to the characteristics of the branch circuit/feeder load being supplied by the whip other than a reduction in the HVAC unit's rated maximum overcurrent protection size. There is no limitation on the whip raceway method (e.g., metallic replaced by nonmetallic).

(VI) Install, repair, replace, and maintain HVAC/refrigeration: Telecommunications, Class 2 low-voltage control circuit wiring/components in other than residential occupancies:

That have no more than three stories on/above grade; or

Regardless of the number of stories above grade if the installation:

• Is made in a previously occupied and wired space; and

• Is restricted to the HVAC/refrigeration system;

(VII) Repair, replace, and maintain HVAC/refrigeration: Telecommunications, Class 2 low-voltage control circuit wiring/components in all occupancies regardless of the number of stories on/above grade.

(VIII) Install a bonding conductor for metal gas piping to an existing accessible grounding electrode conductor or grounding electrode only when terminations can be made external to electrical panelboards, switchboards, or other distribution equipment.

(B) The (06A) HVAC/refrigeration specialty may not:

(I) Install line voltage controllers or disconnect switches external to HVAC/refrigeration equipment;

Exception: If HVAC/R equipment is being replaced, this specialty may remove and replace a disconnecting means enclosure mounted on the surface of the HVAC/R equipment with a like-in-kind disconnecting means enclosure rated not more than 20 amperes and 120 volts using the existing wiring method. When performing this work, this specialty may install up to ten feet of raceway to provide physical protection for nonmetallic cables, but the raceway may not terminate in a panelboard.

(II) Install, repair, replace, or maintain:

• Integrated building control systems, other than HVAC/refrigeration systems;

• Single stand-alone line voltage equipment or components (e.g., heat cable, wall heaters, radiant panel heaters, baseboard heaters, contactors, motor starters, and similar equipment) unless the equipment or component:

Is exclusively controlled by the HVAC/refrigeration system and requires the additional external connection to a mechanical system(s) (e.g., connection to water piping, gas piping, refrigerant system, ducting for the HVAC/refrigeration system, gas fireplace flume, ventilating systems, etc. (i.e., as in the ducting connection to a bathroom fan)). The external connection of the equipment/component to the mechanical system must be required as an integral component allowing the operation of the HVAC/refrigeration system; or

Contains a HVAC/refrigeration mechanical system(s) (e.g., water piping, gas piping, refrigerant system, etc.) within the equipment (e.g., "through-the-wall" air conditioning units, self-contained refrigeration equipment, etc.);

• Luminaires that serve as a building or structure lighting source, even if mechanically connected to a HVAC/refrigeration system (e.g., troffer luminaire used as a return air device, lighting within a walk-in cooler/freezer used for personnel illumination);

• Raceway/conduit systems;

• Line voltage: Service, feeder, or branch circuit conductors. However, if a structure's feeder/branch circuit supplies HVAC/refrigeration equipment containing a supplementary overcurrent protection device(s), this specialty may install the conductors from the supplementary overcurrent device(s) to the supplemental HVAC/refrigeration equipment if the supplementary overcurrent device and the HVAC/refrigeration equipment being supplied are located within sight of each other; or

• Panelboards, switchboards, or motor control centers external to HVAC/refrigeration system.

(III) Install, repair, replace, or maintain: Any electrical wiring governed under article(s) 500, 501, 502, 503, 504, 505, 510, 511, 513, 514, 515, or 516 NEC (i.e., classified locations) located outside the HVAC/refrigeration equipment.

(iv) HVAC/refrigeration - Restricted **(06B):**

(A) The (06B) HVAC/refrigeration specialty may not perform any electrical work where the primary electrical power connection to the HVAC/refrigeration system exceeds: 250 volts, single phase, or 120 amps or electrical work outlined in (f)(iv)(B) of this subsection. The (06B) HVAC/refrigeration specialty may:

(I) Install, repair, replace, and maintain HVAC/refrigeration: Telecommunications, Class 2 low-voltage control circuit wiring/components in all residential occupancies;

(II) Install, repair, replace, or maintain HVAC/refrigeration: Telecommunications, Class 2 low-voltage control circuit wiring/components in other than residential occupancies that have no more than three stories on/above grade;

(III) Install, repair, replace, and maintain line voltage components within HVAC/refrigeration equipment. Such line voltage components include product illumination luminaires installed within and powered from the HVAC/refrigeration system (e.g., reach-in beverage coolers, frozen food cases, produce cases, etc.) and new or replaced factory authorized accessories such as internally mounted outlets;

(IV) Repair, replace, or maintain the internal components of the HVAC/refrigeration equipment disconnecting means or controller so long as the disconnecting means or controller is not located within a motor control center or panelboard;

(V) Install, repair, replace, and maintain short sections of raceway to provide physical protection for low-voltage cables. For the purposes of this section a short section cannot mechanically interconnect two devices, junction boxes, or other equipment or components; and

(VI) Repair, replace, or maintain line voltage flexible supply whips not over six feet in length, provided there are no modifications to the characteristics of the branch circuit/feeder load being supplied by the whip other than a reduction in the HVAC unit's rated maximum overcurrent protection size. There is no limitation on the whip raceway method (e.g., metallic replaced by nonmetallic).

(B) The (06B) HVAC/refrigeration specialty may not:

(I) Install line voltage controllers or disconnect switches external to HVAC/refrigeration equipment;

Exception: If HVAC/R equipment is being replaced, this specialty may remove and replace a disconnecting means enclosure mounted on the surface of the HVAC/R equipment with a like-in-kind disconnecting means enclosure rated not more than 20 amperes and 120 volts using the existing wiring method. When performing this work, this specialty may install up to ten feet of raceway to provide physical protection for nonmetallic cables, but the raceway may not terminate in a panelboard.

(II) Install, repair, replace, or maintain:

• Integrated building control systems, other than HVAC/refrigeration systems;

• Single stand-alone line voltage equipment or components (e.g., heat cable, wall heaters, radiant panel heaters, baseboard heaters, contactors, motor starters, and similar equipment) unless the equipment or component:

Is exclusively controlled by the HVAC/refrigeration system and requires the additional external connection to a mechanical system(s) (e.g., connection to water piping, gas piping, refrigerant system, ducting for the HVAC/refrigeration system, gas fireplace flume, ventilating systems, etc. (i.e., as in the ducting connection to a bathroom fan)). The external connection of the equipment/component to the mechanical system must be required as an integral component allowing the operation of the HVAC/refrigeration system; or

Contains a HVAC/refrigeration mechanical system(s) (e.g., water piping, gas piping, refrigerant system, etc.) within the equipment (e.g., "through-the-wall" air conditioning units, self-contained refrigeration equipment, etc.);

• Luminaires that serve as a building or structure lighting source, even if mechanically connected to a HVAC/refrigeration system (e.g., troffer luminaire used as a return air device, lighting within a walk-in cooler/freezer used for personnel illumination);

• Raceway/conduit systems;

• Line voltage: Service, feeder, or branch circuit conductors. However, if a structure's feeder/branch circuit supplies HVAC/refrigeration equipment containing a supplementary overcurrent protection device(s), this specialty may install the conductors from the supplementary overcurrent device(s) to the supplemental HVAC/refrigeration equipment if the supplementary overcurrent device and the HVAC/refrigeration equipment being supplied are located within sight of each other; or

• Panelboards, switchboards, or motor control centers external to HVAC/refrigeration system.

(III) Install, repair, replace, or maintain:

• The allowed telecommunications/low-voltage HVAC/refrigeration wiring in a conduit/raceway system; or

• Any electrical work governed under article(s) 500, 501, 502, 503, 504, 505, 510, 511, 513, 514, 515, or 516 NEC (i.e., classified locations).

(g) **Nonresidential maintenance (07):** Limited to maintenance, repair and replacement of like-in-kind existing electrical equipment and conductors. This specialty does not include maintenance activities in residential dwellings defined in (a) of this subsection for the purposes of accumulating training experience toward qualification for the residential **(02)** specialty electrician examination.

(i) This specialty includes the installation and connections of temporary conductors and equipment for the purpose of load testing, not to exceed 600 volts.

(ii) For the purposes of replacement of electrical equipment, where the new equipment has a lower ampere rating than the equipment being replaced and there are no modifications to the ampacity rating of the existing conductors, this specialty may replace a device(s) that provides overcurrent or overload protection for the new equipment with a device(s) having a lower ampere rating in accordance with the nameplate rating of the new equipment.

(iii) This specialty may perform the work defined in (h), (i), (j), (k), and (l) of this subsection.

(h) **Nonresidential lighting maintenance and lighting retrofit (07A):** Limited to working within the housing of existing nonresidential luminaires for work related to repair, service,

maintenance of luminaires and installation of energy efficiency lighting retrofit upgrades. This specialty includes replacement of ballasts, sockets, and the installation of listed lighting retrofit reflectors and kits. All work is limited to the luminaire body, except remote located ballasts may be replaced or retrofitted with approved products. This specialty does not include installing new luminaires or branch circuits; moving or relocating existing luminaires; or altering existing branch circuits.

(i) **Residential maintenance (07B):** This specialty is limited to residential dwellings as defined in WAC 296-46B-920 (2)(a), multistory dwelling structures with no commercial facilities, and the interior of dwelling units in multistory structures with commercial facilities. This specialty may maintain, repair, or replace (like-in-kind) existing electrical utilization equipment, and all permit exempted work as defined in WAC 296-46B-901.

This specialty is limited to equipment and circuits to a maximum of 250 volts, 60 amperes, and single phase maximum.

This specialty may disconnect and reconnect low-voltage control and line voltage supply whips not over six feet in length provided there are no modifications to the characteristics of the branch circuit or whip.

For the purpose of this specialty, "electrical equipment" does not include electrical conductors, raceway or conduit systems external to the equipment or whip. This specialty cannot perform any plumbing work regulated under chapter 18.106 RCW.

(j) **Restricted nonresidential maintenance (07C):** This specialty may maintain, repair, or replace (like-in-kind) existing electrical utilization equipment, and all permit exempted work as defined in WAC 296-46B-901 except for the replacement or repair of circuit breakers.

This specialty is limited to equipment and circuits to a maximum of 277 volts and 20 amperes for lighting branch circuits only and/or maximum 250 volts and 60 amperes for other circuits.

The replacement of luminaires is limited to in-place replacement required by failure of the luminaire to operate. Luminaires installed in suspended lay-in tile ceilings may be relocated providing: The original field installed luminaire supply whip is not extended or relocated to a new supply point; or if a manufactured wiring assembly supplies luminaire power, a luminaire may be relocated no more than eight feet providing the manufactured wiring assembly circuiting is not changed.

This specialty may disconnect and reconnect low-voltage control and line voltage supply whips not over six feet in length provided there are no modifications to the characteristics of the branch circuit. For the purpose of this specialty, "electrical equipment" does not include electrical conductors, raceway or conduit systems external to the equipment or whip.

This specialty may perform the work defined in (h) and (i) of this subsection.

This specialty cannot perform any work governed under Article(s) 500, 501, 502, 503, 504, 505, 510, 511, 513, 514, 515, or 516 NEC (i.e., classified locations). This specialty cannot perform any plumbing work regulated under chapter 18.106 RCW.

(k) **Appliance repair (07D):** Servicing, maintaining, repairing, or replacing household appliances, small commercial/industrial appliances, and other small electrical utilization equipment.

(i) For the purposes of this subsection:

(A) The appliance or electrical utilization equipment must be self-contained and built to standardized sizes or types. The appliance/equipment must be connected as a single unit to a single source of electrical power limited to a maximum of 250 volts, 60 amperes, single phase.

(B) Appliances and electrical utilization equipment include, but are not limited to: Ovens, office equipment, vehicle repair equipment, commercial kitchen equipment, self-contained hot tubs and spas, grinders, and scales.

(C) Appliances and utilization equipment do not include systems and equipment such as: Alarm/energy management/similar systems, luminaires, furnaces/heaters/air conditioners/heat pumps, sewage disposal equipment, door/gate/similar equipment, or individual components installed so as to create a system (e.g., pumps, switches, controllers, etc.).

(ii) This specialty includes:

(A) The in-place like-in-kind replacement of the appliance or equipment if the same unmodified electrical circuit is used to supply the equipment being replaced. This specialty also includes the like-in-kind replacement of electrical components within the appliance or equipment;

(B) The disconnection and reconnection of low-voltage control and line voltage supply whips not over six feet in length provided there are no modifications to the characteristics of the branch circuit; and

(C) The installation of an outlet box and outlet at an existing appliance or equipment location when converting the appliance from a permanent electrical connection to a plug and cord connection. Other than the installation of the outlet box and outlet, there can be no modification to the existing branch circuit supplying the appliance or equipment.

(iii) This specialty does not include:

(A) The installation, repair, or modification of branch circuits conductors, services, feeders, panelboards, disconnect switches, or raceway/conductor systems interconnecting multiple appliances, equipment, or other electrical components.

(B) Any work governed under Article(s) 500, 501, 502, 503, 504, 505, 510, 511, 513, 514, 515, or 516 NEC (i.e., classified locations).

(C) Any plumbing work regulated under chapter 18.106 RCW.

(l) **Equipment repair (07E):** Servicing, maintaining, repairing, or replacing utilization equipment.

See RCW 19.28.095 for the equipment repair scope of work and definitions. This specialty cannot perform any plumbing work regulated under chapter 18.106 RCW.

(m) **Telecommunications (09):** Limited to the installation, maintenance, and testing of telecommunications systems, equipment, and associated hardware, pathway systems, and cable management systems.

(i) This specialty includes:

(A) Installation of open wiring systems of telecommunications cables.

(B) Surface nonmetallic raceways designated and used exclusively for telecommunications.

(C) Optical fiber innerduct raceway.

(D) Underground raceways designated and used exclusively for telecommunications and installed for additions or extensions to existing telecommunications systems not to exceed 50 feet inside the building.

(E) Incidental short sections of circular or surface metal raceway, not to exceed 10 feet, for access or protection of telecommunications cabling and installation of cable trays and ladder racks in telecommunications service entrance rooms, spaces, or closets.

(F) Audio or paging systems where the amplification is integrated into the telephone system equipment.

(G) Audio or paging systems where the amplification is provided by equipment listed as an accessory to the telephone system equipment and requires the telephone system for the audio or paging system to function.

(H) Closed circuit video monitoring systems if there is no integration of line or low-voltage controls for cameras and equipment. Remote controlled cameras and equipment are considered (intrusion) security systems and must be installed by appropriately licensed electrical contractors and certified electricians.

(I) Customer satellite and conventional antenna systems receiving a telecommunications service provider's signal. All receiving equipment is on the customer side of the telecommunications network demarcation point.

(ii) This specialty does not include horizontal cabling used for fire protection signaling systems, intrusion alarms, access control systems, patient monitoring systems, energy management control systems, industrial and automation control systems, HVAC/refrigeration control systems, lighting control systems, and stand-alone amplified sound or public address systems. Telecommunications systems may interface with other building signal systems including security, alarms, and energy management at cross-connection junctions within telecommunications closets or at extended points of demarcation. Telecommunications systems do not include the installation or termination of premises line voltage service, feeder, or branch circuit conductors or equipment. Horizontal cabling for a telecommunications outlet, necessary to interface with any of these systems outside of a telecommunications closet, is the work of the telecommunications contractor.

(n) **Door, gate, and similar systems (10):** This specialty may install, service, maintain, repair, or replace door/gate/similar systems electrical operator wiring and equipment.

(i) For the purposes of this subsection, door/gate/similar systems electrical operator systems include electric gates, doors, windows, awnings, movable partitions, curtains and similar systems. These systems include, but are not limited to: Electric gate/door/similar systems operators, control push buttons, key switches, key pads, pull cords, air and electric treadle, air and electric sensing edges, coil cords, take-up reels, clocks, photo electric cells, loop detectors, motion detectors, remote radio and receivers, antenna, timers, lock-out switches, stand-alone release device with smoke detection, strobe light, annunciator, control panels, wiring and termination of conductors.

(ii) This specialty includes:

(A) Low-voltage, NEC Class 2, door/gate/similar systems electrical operator systems where the door/gate/similar systems electrical operator system is not connected to other systems.

(B) Branch circuits originating in a listed door/gate/similar systems electric operator control panel that supplies only door/gate/similar systems system components providing: The branch circuit does not exceed 600 volts, 20 amperes and the component is within sight of the listed door/gate/similar systems electric operator control panel.

(C) Reconnection of line voltage power to a listed door/gate/similar systems electric operator control panel is permitted provided:

• There are no modifications to the characteristics of the branch circuit/feeder;

• The circuit/feeder does not exceed 600 volts, 20 amperes; and

• The conductor or conduit extending from the branch circuit/feeder disconnecting means or junction box does not exceed six feet in length.

(iii) This specialty does not include any work governed under Article(s) 500, 501, 502, 503, 504, 505, 510, 511, 513, 514, 515, or 516 NEC (i.e., classified locations). This specialty may not install, repair, or replace branch circuit (line voltage) conductors, services, feeders, panelboards, or disconnect switches supplying the door/gate/similar systems electric operator control panel.

(3) A specialty electrical contractor, other than the **(06)** limited energy specialty electrical contractor, may only perform telecommunications work within the equipment or occupancy limitations of their specialty electrical contractor's license. Any other telecommunications work requires a telecommunications contractor's license.

WAC 296-46B-925 Electrical/telecommunications contractor's license.

General.

(1) The department will issue an electrical/telecommunications contractor's license that will expire 24 months following the date of issue to a person, firm, partnership, corporation or other entity that complies with requirements for such license in chapter 19.28 RCW. An electrical/telecommunications contractor's license will not be issued to or renewed for a person, firm, or partnership unless the Social Security number, date of birth, and legal address of each member(s) (see WAC 296-46B-100 definition for member), are submitted with the application. The department may issue an electrical/telecommunications contractor's license for a period greater or less than 24 months for the purpose of equalizing the number of electrical contractor's licenses that expire each month. The department may prorate the electrical/telecommunications contractor's license fee according to the license period.

The applicant, upon application and renewal, must provide the department with the Social Security number, date of birth, and legal address of each member(s).

(2) Combination specialty contractor's license. The department may issue a combination specialty contractor's license to a firm that qualifies for more than one specialty electrical contractor's license. The assigned administrator must be certified in all specialties applicable to the combination specialty contractor's license. The license will plainly indicate the specialty licenses' codes included in the combination license. An administrator assigned to a telecommunications contractor must be certified as a telecommunications administrator. A combination license will not be issued for telecommunications **(09).**

(3) See RCW 19.28.041(7) for a contractor doing domestic pumping work as defined in RCW 18.106.010 (14)(c).

(4) The department may deny application, renewal, change of assignment of administrator/master electrician, reinstatement, or issuance of an electrical/telecommunications contractor's license if a firm, an owner, partner, member, or corporate officer owes money as a result of an outstanding final judgment(s) under chapter 19.28 RCW.

Electrical/telecommunications contractor bond, cash or securities deposit.

(5) Bond, cash, or securities deposit.

(a) The electrical/telecommunications contractor may furnish the department with a cash or security deposit to meet the bond requirements in lieu of posting a bond. A cash or security deposit assigned to the department for bond requirements will be held in place for one year after the contractor's license is expired, revoked, or the owner notifies the department in writing that the company is no longer doing business in the state of Washington as an electrical/telecommunications contractor. Upon written request, the cash or security deposit will then be released by the department providing there is no pending legal action against the contractor under chapter 19.28 RCW of which the department has been notified.

(b) See RCW 19.28.041(7) for a contractor doing domestic pumping work as defined in RCW 18.106.010 (14)(c).

Telecommunications contractor insurance.

(6) To obtain a telecommunications contractor's license, the applicant must provide the department with an original certificate of insurance naming the department of labor and industries, electrical section as the certificate holder. Insurance coverage must be no less than $20,000 for injury or damages to property, $50,000 for injury or damage including death to any one person, and $100,000 for injury or damage including death to more than one person. The insurance will be considered a continuing obligation unless canceled by the insurance company. The insurance company must notify the department in writing 10 days prior to the effective date of said cancellation or failure to renew.

(7) The telecommunications contractor may furnish the department with an assigned account to meet the insurance requirements in lieu of a certificate of insurance. An account assigned to the department for insurance requirements will be held in place for three years after the contractor's license is expired, revoked, or the owner notifies the department in writing that the company is no longer doing business in the state of Washington as a telecommunications contractor. Upon written request, the account then will be released by the department providing there is no pending legal action against the contractor under chapter 19.28 RCW of which the department has been notified.

Electrical/telecommunications contractor exemptions.

(8) The following types of systems and circuits are considered exempt from the requirements for licensing and permitting described in chapter 19.28 RCW. The electrical failure of these systems does not inherently or functionally compromise safety to life or property.

Low-voltage thermocouple derived circuits and low-voltage circuits for:

(a) Residential: Garage doors and built-in vacuum systems; and

(b) Underground: Landscape sprinkler systems, landscape lighting, and antennas for wireless animal containment fences.

For these types of systems and circuits to be considered exempt, the following conditions must be met:

(c) The power supplying the installation must be derived from a listed Class 2 power supply;

(d) The installation and termination of line voltage equipment and conductors supplying these systems is performed by appropriately licensed and certified electrical contractors and electricians;

(e) The conductors of these systems do not pass through fire-rated walls, fire-rated ceilings or fire-rated floors in other than residential units; and

(f) Conductors or luminaires are not installed in installations covered by the scope of Article 680 NEC (swimming pools, fountains, and similar installations).

(9) Firms who clean and/or replace lamps in luminaires are not included in the requirements for licensing in chapter 19.28 RCW. This exemption does not apply to electric signs as defined in the NEC.

(10) Firms who install listed plug and cord connected utilization equipment are not included in the requirements for licensing in chapter 19.28 RCW. The plug and cord must be a single listed unit consisting of a molded plug and cord and not exceeding 250 volt 60 ampere single phase. The plug and cord can be field installed per the manufacturer's instructions and the product listing requirements. The utilization equipment must be a single manufactured unit, including the plug and cord, that does not require any electrical field assembly except for the installation of the plug and cord and is allowed to be plug and cord connected by the NEC. Firms who perform field electrical servicing, maintaining, or repairing of plug and cord connected utilization equipment other than household appliances are not included in this exemption.

(11) Firms regulated by the Federal Communications Commission or the utilities and transportation commission, supplying telecommunications service to an end-user's property, are not required to be licensed as a telecommunications contractor under chapter 19.28 RCW for telecommunications installations made ahead of the telecommunications network demarcation point.

(12) Unregulated firms, supplying telecommunications service to an end-user's property, are not required to be licensed as a telecommunications contractor under chapter 19.28 RCW for telecommunications installations made ahead of the telecommunications network demarcation point.

(13) Leaseholders. For electrical installations, maintenance, or alterations to existing buildings only, any person, firm, partnership, corporation, or other entity holding a valid, signed lease from the property owner authorizing the leaseholder to perform electrical work, on the property the leaseholder occupies, will be allowed to purchase an electrical permit(s) and do electrical work on or within the property described in the lease. The lessee and/or his or her regularly employed employees must perform the electrical installation, maintenance and alteration.

The lessee who performs the electrical maintenance or installation work must be the sole occupant of the property or space. Property owners or leaseholders cannot perform electrical work on new buildings for rent, sale, or lease, without the proper electrical licensing and certification. For the purposes of this section, electrical work associated with setting a manufactured, mobile, or modular building is considered electrical work on a new building. Refer to RCW 19.28.261 for exemptions from licensing and certification.

(14) Assisting a householder. A friend, neighbor, relative, or other person (including a certified electrician) may assist a householder, at his/her residence in the performance of electrical work on the condition that the householder is present when the work is performed and the person assisting the householder does not accept money or other forms of compensation for the volunteer work. For the purposes of this subsection, a residence is a single-family residence.

(15) Volunteering to do electrical work. There are no exceptions from the electrical contractor's license or electrician certification requirements to allow persons to perform volunteer electrical work for anyone other than a householder or a nonprofit organization as allowed by RCW 19.28.091(7). For the purpose of this section, volunteer means that there is no remuneration or receiving of goods or services in return for electrical installations performed.

(16) Farms or place of business. See RCW 19.28.261 for licensing/certification exemptions allowed for the owner(s) of a farm or other place of business and for the employees of the owner.

(17) The licensing and certification requirements of chapter 19.28 RCW do not apply to persons or firms who remove electrical wiring and/or equipment for the purpose of disposal when all conductors, raceways, and equipment to be disposed of have been physically separated from the source of power by a properly certified electrician employed by a licensed electrical contractor, or person(s) meeting the exemptions listed in RCW 19.28.261. Removal of a component or only a portion of an equipment unit is considered electrical maintenance and does not qualify for this exemption.

Exemptions - Electrical utility and electrical utility's contractor.

(18) Electrical utility exemptions.

(a) Utility system exemption - RCW 19.28.010(1) and 19.28.091(1).

(i) Neither a serving electrical utility nor a contractor or subcontractor employed by the serving electrical utility is required to have an electrical contractor's license for work on the "utility system" or on service connections or on meters or other apparatus used to measure the consumption of electricity.

(ii) Exemption from inspection. The work of a serving electrical utility and its contractor(s) on the work exempted by NEC 90.2 (b)(5), 1981 edition, is not subject to inspection.

(b) Street/area lighting exemption - RCW 19.28.091 (2)(a).

(i) On:

(A) Publicly owned streets, parks, athletic/play fields, beaches, and similar areas where the public has general, clear, and unrestricted access; or

(B) Outside area lighting installed on a utility owned pole(s) that is used to support the utility's electric distribution wiring or equipment that supplies a private property owner's property, the serving electrical utility is considered to be an owner and is not required to have an electrical contractor's license or electrical permit to install or work on wiring or equipment, owned by the utility and used in the lighting of those streets/areas.

(ii) On other privately or publicly owned property (e.g., private streets, parking lots, businesses, schools, etc.), the serving utility is not required to have an electrical contractor's license or electrical permit to install or work on outside street/area lighting where the light(s) is supplied directly from the utility system and installed according to the NESC or NEC.

This work is considered to be utility type work.

An electric utility is not allowed to install or work on street/area lighting:

(A) When the area is privately or publicly owned and the public does not have general, clear, and otherwise unrestricted access such as: Industrial property, residential property, or other property where the public's access is restricted in any manner.

(B) Where the lighting is supplied from a source of power derived from a customer-owned electrical system.

(C) Where the lighting or wiring is attached to a building or other customer-owned structure.

(D) If the utility does not directly perform the installation or work, it may only contract the work to an appropriately licensed electrical contractor(s). See RCW 19.28.091(3).

(c) Customer-owned equipment exemption - RCW 19.28.091 (2)(b). A serving electrical utility is not required to have an electrical contractor's license to work on electrical equipment owned by a commercial, industrial, or public institution customer if:

(i) The utility has not solicited such work; and

(ii) Such equipment:

(A) Is located outside a building or structure; and

(B) The work performed is ahead of the secondary side of the customer's transformer(s) which supplies power at the customer's utilization voltage.

If the utility does not directly perform the installation or work, it may only contract the work to an appropriately licensed electrical contractor(s). See RCW 19.28.091(3).

This work is considered to be utility type work.

The owner will provide the electrical work permit and be responsible for requesting inspections and for ensuring the work is installed per chapter 19.28 RCW and this chapter.

Exemptions - Electrical utility telecommunications transition equipment installations, maintenance and repair.

(19) No license, inspection or other permit will be required by the department of any electric utility or, of any person, firm, partnership or corporation or other entity employed or retained by an electric utility or its contractor, because of work in connection with the installation, maintenance, or repair of telecommunications transition equipment located ahead of the utility's telecommunications network demarcation point on the outside of a building or other structure when the work is performed by a qualified person consistent with the requirements of the National Electric Code (NEC) except as provided in (a) and (b) of this subsection:

(a) The following exceptions to the NEC will be permitted:

(i) An additional service disconnect supplying power to the transition equipment can be connected on the supply side of the main service disconnect supplying general power to the building;

(ii) Service entrance disconnects may be separated when clearly labeled;

(iii) The service disconnect used for supplying power to the transition equipment must be connected to the grounding electrode system using:

(A) #8 AWG copper or larger grounding electrode conductor if protected from physical damage; or

(B) #6 AWG copper or larger grounding electrode conductor if not protected from physical damage;

(iv) Use of equipment or materials that have been listed/field evaluated by a recognized independent testing laboratory or the department;

(v) Low-voltage circuits do not require a separate disconnecting means and may be grounded to the transition equipment grounding system;

(vi) Any other variance to the NEC must be approved by the department.

(b) A variance recommended by a joint utility standards group composed of representatives of both public and private utilities or certified by a professional engineer will be

approved by the department unless the recommendation is inconsistent with meeting equivalent objectives for public safety.

(c) For the purposes of this section, a qualified worker is employed by a utility or its contractor and is familiar with the construction or operation of such lines and/or equipment that concerns his/her position and who is proficient with respect to the safety hazards connected therewith, or, one who has passed a journey status examination for the particular branch of the electrical trades with which he/she may be connected or is in a recognized training or apprenticeship course and is supervised by a journey level person.

(d) Although the utility is responsible for inspection and approval of the installation, including the selection of material and equipment, the department reserves the right to audit worker qualifications and inspect such installations semiannually for conformance with the requirements of (a), (b) and (c) of this subsection but will not collect a permit fee for such inspection or audit.

(e) If a utility fails to meet the requirements of this section, the department may require the utility to develop and submit a remedial action plan and schedule to attain compliance with this section which may be enforced by the department.

(f) This exemption will be in addition to any other exemption provided in chapter 19.28 RCW, this chapter or other applicable law.

Exemptions - Independent electrical power production equipment exemption.

(20) An independent electrical power production entity is not required to have an electrical contractor's license to work on electrical equipment used to produce or transmit electrical power if:

(a) The entity is:

(i) The owner or operator of the generating facility is regulated by the Federal Energy Regulatory Commission (FERC);

(ii) A municipal utility, or other form of governmental electric utility, or by an electrical cooperative or mutual corporation; or

(iii) The owner or operator of the generating facility is an independent electrical power producer and the facility generates electrical power only for sale to one or more:

(A) Electrical utilities regulated by FERC, municipal utility, or other form of governmental utility, or to an electric cooperative or mutual corporation; and

(B) The electrical power generated by the facility is not used for self-generation or any other on- or off-site function other than sale to one or more utilities regulated by FERC or by one or more state public utilities commissions, or to a PUD, municipal utility, or other form of governmental electric utility, or to an electric cooperative or mutual corporation.

(b) The entity must supply the chief electrical inspector a valid master business license issued by the department of licensing, state of Washington so that the entity's status as a revenue generating business can be confirmed.

(c) The entity has entered into an agreement to sell electricity to a utility or to a third party; and

(d) The electrical equipment is used to transmit electricity from the terminals of an electrical generating unit located on premises to the point of interconnection with a utility system.

(e) The electrical power production facility's generation capacity exceeds 100 KVA.

(f) Notwithstanding that a generating facility may be granted an exemption pursuant to this section, the facility will be subject to all the requirements of chapter 19.28 RCW if the facility at any time in the future ceases to comply with the requirements for exemption. All site facilities not exclusively and directly required to generate and/or distribute the electrical power generated on the site are subject to all the licensing and inspection requirements of chapter 19.28 RCW. All facility services, feeders, and circuits not exclusively and directly required to generate and/or distribute the electrical power (e.g., lights, outlets, etc.) must comply with all requirements of chapter 19.28 RCW for licensing and inspection. Facility circuits supplied to equipment required for the function of generation equipment (e.g., block heaters, power supplies, wind generator tower circuits, etc.) must comply with all requirements of chapter 19.28 RCW for licensing and inspection up to and including the equipment termination point.

(g) The generation equipment must not be mounted on or in any building or structure not required for generation of power (e.g., schools, offices, residences, apartment buildings, hospitals, etc.).

Exemptions - Telegraph and telephone utility and telegraph and telephone utility's contractor.

(21) Telegraph and telephone utility exempted equipment and installations. No person, firm, partnership, corporation, or other entity is required to have an electrical contractor's license for work on electrical equipment and installations thereof that are exempted by RCW 19.28.151. For the purposes of this exemption, "building or buildings used exclusively for that purpose" may mean any separate building or space of a building where the space is separated from the remainder of the building by a two-hour fire wall. The telecommunications or telegraph equipment within such a space must supply telephone or telegraph service to other customer's buildings (i.e., telecommunications or telegraph equipment cannot solely supply the building containing the telephone/telegraph space).

Exemptions - Manufacturers of electrical/telecommunications products.

(22) Manufacturers of electrical/telecommunications systems products will be allowed to utilize a manufacturer's authorized factory-trained technician to perform initial calibration, testing, adjustment, modification incidental to the startup and checkout of the equipment, or replacement of components within the confines of the specific product, without permit or required licensing:

(a) Provided the product:

(i) Has not been previously energized;

(ii) Has been recalled by the Consumer Product Safety Commission;

(iii) Is within the manufacturer's written warranty period, a period not to exceed one year from date of original installation of the new product; or

(iv) The manufacturer is working under the written request and supervision of an appropriately licensed electrical contractor.

(b) Except for the replacement of individual components, as allowed above, this exemption does not include the on-site assembly, installation, removal, or replacement of the electrical product. Modifications to the equipment, as designated above, must not include any changes to the original intended configuration nor changes or contact with external or field-connected components or wiring.

(c) The manufacturer will be responsible for obtaining any required reapproval/recertification from the original listing or field evaluation laboratory.

(d) The manufacturer must notify the department if any modifications have been made or reapproval/recertification is required.

Premanufactured electric power generation equipment assemblies and control gear.

(23) Premanufactured electric power generation equipment assemblies and control gear.

(a) Manufacturers of premanufactured electric power generation equipment assemblies and control gear will be allowed to utilize a manufacturer's authorized factory-trained technician to perform initial calibration, testing, adjustment, modification incidental to the startup and checkout of the equipment, or replacement of components within the confines of the specific product, without permit or required licensing, provided:

(i) For transfer equipment, the product has not been previously energized or is within the manufacturer's written warranty period;

(ii) Modifications to the equipment, as designated above, must not include any changes to the original intended configuration nor changes or contact with external or field-connected components or wiring;

(iii) The manufacturer will be responsible for obtaining any required reapproval/recertification from the original listing or field evaluation laboratory; or

(iv) The manufacturer must notify the department if any modifications have been made or reapproval/recertification is required.

(b) Premanufactured electric power generation equipment assemblies are made up of reciprocating internal combustion engines and the associated control gear equipment. Control gear equipment includes control logic, metering, and annunciation for the operation and the quality of power being generated by the reciprocating internal combustion engine and does not have the function of distribution of power.

(c) Modifications of a transfer switch must not include changes to the original intended configuration or changes or contact with externally field-connected components.

(d) For the purposes of this subsection, the following work on premanufactured electric power generation equipment assemblies is not exempt from the requirements of chapter 19.28 RCW:

(i) Installation or connection of conduit or wiring between the power generation unit, transfer switch, control gear;

(ii) Installation of the transfer switch;

(iii) Connections between the power generation unit, transfer switch, control gear, and utility's transmission or distribution systems;

(iv) Connections between the power generation unit, transfer switch, control gear, and any building or structure; or

(v) Test connections with any part of:

(A) The utility's transmission or distribution system; or

(B) The building or structure.

(24) The installation, maintenance, or repair of a medical device deemed in compliance with chapter 19.28 RCW is exempt from licensing requirements under RCW 19.28.091, certification requirements under RCW 19.28.161, and inspection and permitting requirements under RCW 19.28.101. This exemption does not include work providing electrical feeds into the power distribution unit or installation of conduits and raceways. This exemption covers only those factory engineers or third-party service companies with equivalent training who are qualified to perform such service.

(25) Coincidental electrical/plumbing work. See RCW 19.28.091(8) for the plumber exemption. For the purposes of RCW 19.28.091(8), the like-in-kind replacement includes the appliance or any component part of the appliance such as, but not limited to, the thermostat in a water heater.

(26) Nothing in this section will alter or amend any other exemptions from or requirement for licensure or inspection, chapter 19.28 RCW or this chapter.

Photovoltaic equipment.

(27) See WAC 296-46B-690 for specific exemptions related to photovoltaic installations.

Submersible well pump installers.

(28) Firms that install submersible pumps and associated wiring in well casings, (excluding connection of pump wiring at the top of the wellhead) are not included in the requirements for licensing in chapter 19.28 RCW.

EXCEPTION: For testing purposes of a new submersible pump, well drillers and submersible pump installers registered under chapter 18.27 RCW may temporarily connect a submersible well pump to a portable generator with cord and plug output. All temporary wiring and equipment must be removed immediately upon completion of testing.

WAC 296-46B-930 Assignment—Administrator or master electrician.

An administrator or master electrician designated on the electrical/telecommunications contractor's license must be a member of the firm who fulfills the duties of an assigned master electrician/administrator as required in RCW 19.28.061(5), or be a full-time supervisory employee. A member of the firm is defined in WAC 296-46B-100.

In determining whether an individual is a full-time supervisory employee, the department will consider whether the individual is on the electrical/telecommunications contractor's full-time payroll; receives a regular salary or wage similar to other employees; has supervisory responsibility for work performed by the electrical/telecommunications contractor, and carries out the duties shown in chapter 19.28 RCW.

WAC 296-46B-935 Administrator certificate.

General.

(1) The department will deny application, renewal, change of assignment, reinstatement, or issuance of an administrator or master electrician certificate if an individual owes money as a result of an outstanding final judgment(s) under chapter 19.28 RCW.

(2) For special accommodation see WAC 296-46B-960.

(3) An applicant will not be issued a specialty administrator certificate that is a subspecialty of a certificate the applicant currently holds (i.e., the applicant is not eligible to take the domestic well administrator examination if the applicant currently possesses a pump and irrigation administrator certificate).

Qualifying for examination.

(4) There are no qualification requirements for taking an administrator certificate examination. Applicants should contact the testing agency directly.

Original - Administrator certificates.

(5) The scope of work for electrical administrators is described in WAC 296-46B-920. The department will issue an original administrator certificate to a general administrator, or specialty administrator who:

(a) Successfully completes the appropriate administrator examination; and

(b) Submits the appropriate examination passing report from the testing agency with the applicant's: Date of birth, mailing address, and Social Security number; and

(c) Pays all appropriate fees as listed in WAC 296-46B-909.

For an examination report to be considered, all the above must be submitted within ninety days after the completion of the examination. After ninety days, the applicant will be required to successfully retake the complete examination. An individual's original administrator certificate will expire on their birth date at least one year, and not more than three years, from the date of original issue.

Combination - Specialty administrator certificate.

(6) The department may issue a combination specialty administrator certificate to an individual who qualifies for more than one specialty administrators' certificate. The combination specialty administrators' certificate will plainly indicate the specialty administrator's certificate(s) the holder has qualified for. Telecommunications cannot be issued a combination because the renewal requirements are different from those required for electrical administrators.

Renewal - Administrator certificate.

(7) An individual must apply for renewal of their administrator certificate on or before the expiration date of the certificate. The individual may not apply for renewal more than ninety days prior to the expiration date. Renewed certificates are valid for three years, with the exception of telecommunications administrators, who will be renewed for two years.

(8) An individual may renew their administrator certificate within ninety days after the expiration date without reexamination if the individual pays the late renewal fee listed in WAC 296-46B-909.

(9) All renewals received more than ninety days after the expiration date of the certificate will be denied. The administrator will be required to pass the appropriate administrator examination before being recertified.

(10) All applicants for certificate renewal must:

(a) Submit a complete renewal application;

(b) Pay all appropriate fees as listed in WAC 296-46B-909; and

(c) Complete the continuing education requirements described in WAC 296-46B-970. Continuing education classes are only valid when all the requirements of WAC 296-46B-970 are completed.

Telecommunications administrators are not required to provide continuing education information.

Continuing education for pump and irrigation **(03)** and domestic pump **(03A)** administrators may be comprised of fifty percent electrical and fifty percent plumbing instruction.

(11) An individual who has not completed the required hours of continuing education can renew an administrator's certificate if the individual applies for renewal on or before the certificate expires and pays the appropriate renewal fee. However, the certificate will be placed in an inactive status.

When the certificate is placed in inactive status, an assigned administrator will be automatically unassigned from the electrical contractor. The electrical contractor will be notified of the unassignment and has ninety days to replace the administrator. An assignment fee will then be required per WAC 296-46B-909.

The inactive certificate will be returned to current status upon validation, by the department, of the required continuing education requirements. If the certificate renewal date occurs during the inactive period, the certificate must be renewed on or before the renewal date to allow the return to current status.

(12) An individual may renew a suspended administrator's certificate by submitting a complete renewal application including obtaining and submitting the continuing education required for renewal. However, the certificate will remain in a suspended status for the duration of the suspension period. Before the suspended administrator's certificate can be activated, the holder must pass the appropriate administrator examination in accordance with RCW 19.28.061 (2)(a).

(13) An individual may not renew a revoked administrator's certificate.

WAC 296-46B-940 Electrician/certificate of competency required.

General.

(1) The department will deny application, renewal, reinstatement, or issuance of a certificate or permit if an individual owes money as a result of an outstanding final judgment(s) under chapter 19.28 RCW.

(2) The scope of work for electricians is described in WAC 296-46B-920.

Electrician - Certificate of competency required.

(3) To work in the electrical construction trade, an individual must possess, wear, and visibly display on the front of the upper body, a current valid:

(a) Master journey level electrician certificate of competency issued by the department;

(b) Journey level electrician certificate of competency issued by the department;

(c) Master specialty electrician certificate of competency issued by the department;

(d) Specialty electrician certificate of competency issued by the department; or

(e) Electrical training certificate, learning the trade in the proper ratio, per RCW 19.28.161, under the supervision of a certified master journey level electrician, journey level electrician, master specialty electrician working in their specialty, or specialty electrician working in their specialty.

The certificate may be worn inside the outer layer of clothing when outer protective clothing (e.g., rain gear when outside in the rain, arc flash, welding gear, etc.) is required. The certificate must be worn inside the protective clothing so that when the protective clothing is removed, the certificate is visible. A cold weather jacket or similar apparel is not protective clothing.

The certificate may be worn inside the outer layer of clothing when working in an attic or crawl space or when operating equipment (e.g., drill motor, conduit threading machine, etc.) where wearing the certificate may pose an unsafe condition for the individual.

The certificate must be immediately available for examination at all times.

When working as a certified electrician, the electrician must not display a training certificate.

When supervising a trainee(s), the supervising electrician's certificate must be appropriate for the work being performed by the trainee(s). For the purposes of this section, supervising a trainee is considered to be working in the electrical construction trade.

Any person working as an electrician or trainee must also possess a government issued photo identification and immediately present that identification when requested by the inspector.

(4) The department issues master electrician and electrician certificates of competency in the following areas of electrical work:

(a) General journey level **(01);**

(b) Specialties:

(i) Residential **(02);**

(ii) Pump and irrigation **(03);**

(iii) Domestic pump **(03A);**

(iv) Signs **(04);**

(v) Limited energy system **(06);**

(vi) HVAC/refrigeration **(06A);**

(vii) HVAC/refrigeration - Restricted **(06B);**

(viii) Nonresidential maintenance **(07);**

(ix) Nonresidential lighting maintenance and lighting retrofit **(07A);**

(x) Residential maintenance **(07B);**

(xi) Restricted nonresidential maintenance **(07C);**

(xii) Appliance repair **(07D);**

(xiii) Equipment repair **(07E);** and

(xiv) Door, gate, and similar systems **(10).**

Original certificates of competency.

(5) The department will issue an original certificate of competency to master, journey level, or specialty electricians who meet the eligibility requirements listed in:

(a) RCW 19.28.191 (1)(a) or (b) and chapter 19.28 RCW; and

(i) Submit an application for an original master electrician certificate including: Date of birth, mailing address and Social Security number; and

(ii) Pay all appropriate fees, as listed in WAC 296-46B-909;

(b) RCW 19.28.191 (1)(d) and (e);

(i) Submit an original master electrician certification examination application including: Date of birth, mailing address and Social Security number; and

(ii) Pay all appropriate fees, as listed in WAC 296-46B-909; or

(c) RCW 19.28.191 (1)(f) through (g);

(i) Submit an original electrician certification examination application including: Date of birth, mailing address and Social Security number; and

(ii) Pay all appropriate fees, as listed in WAC 296-46B-909.

(6) An individual's original electrician certificate of competency will expire on their birth date at least two years, and not more than three years, from the date of original issue.

Renewal - Master electrician, journey level, and specialty electrician certificates of competency.

(7) An individual must apply for renewal of their electrician certificate of competency on or before the expiration date of the certificate. The individual may not apply for renewal more than ninety days prior to the expiration date. Renewed certificates are valid for three years.

(8) An individual may renew their certificate of competency within ninety days after the expiration date without reexamination if the individual pays the late renewal fee listed in WAC 296-46B-909.

(9) All applications for renewal received more than ninety days after the expiration date of the certificate of competency require that the electrician pass the appropriate competency examination before being recertified.

(10) All applicants for certificate of competency renewal must:

(a) Submit a complete renewal application;

(b) Pay all appropriate fees; and

(c) Complete the continuing education requirements described in WAC 296-46B-970. Continuing education classes are only valid when all the requirements of WAC 296-46B-970 are completed.

Continuing education for pump and irrigation **(03)** and domestic pump **(03A)** electricians may be comprised of fifty percent electrical and fifty percent plumbing instruction.

(11) An individual who has not completed the required hours of continuing education can renew a certificate of competency if the individual applies for renewal before the certificate of competency expires and pays the appropriate renewal fee. However, the certificate of competency will be placed in an inactive status. The inactive certificate of competency will be returned to current status upon validation, by the department, of the required continuing education. If the certificate renewal date occurs during the inactive period, the certificate must be renewed on or before the renewal date to allow the return to current status.

(12) An individual may renew a suspended certificate of competency by submitting a complete renewal application including obtaining and submitting the continuing education required for renewal. However, the certificate will remain in a suspended status for the duration of the suspension period. Before the suspended certificate of competency can be activated, the holder must pass the appropriate electrician or master electrician competency examination in accordance with RCW 19.28.211(2).

(13) An individual may not renew a revoked certificate of competency.

Exemptions - Lineworker.

(14) When performing the work described and allowed in WAC 296-46B-925 (18)(a) or (b)(i), when employed by the serving utility or its contractor or subcontractor(s), a lineworker is exempt from the requirements of chapter 19.28 RCW.

(15) When performing the work described and allowed in WAC 296-46B-925 (18)(b)(ii) or (c), when employed by the serving utility or its licensed electrical contractor or subcontractor(s), a lineworker must meet the requirements of RCW 19.28.261 (5)(b) or be an appropriately certified electrician. See the definition of a lineworker in WAC 296-46B-100.

Exemptions - Plumbers.

(16) Coincidental electrical/plumbing work. See RCW 19.28.091(8) for the plumber exemption. For the purposes of RCW 19.28.091(8), the like-in-kind replacement includes the appliance or any component part of the appliance such as, but not limited to, the thermostat in a water heater.

Exemptions – Submersible well pump installers.

(17) When performing the work described and allowed in WAC 296-46B-925(28), regular employees of well drillers or pump installers registered under chapter 18.27 RCW are exempt from the electrician certification requirements of chapter 19.28 RCW.

Reciprocal agreements between Washington and other states.

(18) The department may negotiate reciprocal agreements with states that have equivalent requirements for certification of journey level or specialty electricians. These agreements allow electricians from those reciprocal states to become certified in the state of Washington without examination and allow Washington certified electricians to become certified in the other states without taking competency examinations. An individual may only apply for reciprocity from another state(s) one time in Washington.

(19) An individual will be issued a reciprocal electrician certificate of competency if all the following conditions are met:

(a) The department has a valid reciprocal agreement with the other state in the journey level or specialty category requested;

(b) The individual makes a complete application for a reciprocal certificate on the form provided by the department. A complete application includes:

(i) Application for reciprocal certificate of competency;

(ii) Evidence that the individual meets the eligibility requirements listed in RCW 19.28.191, by presenting a current, valid journeyperson or specialty electrician certificate or certified letter from the issuing state attesting to possession of such certificate by the applicant:

(A) Evidence from an apprenticeship training director that any journey level category applicant has successfully completed an apprenticeship program that is equivalent to an apprenticeship program approved under chapter 49.04 RCW approved by the department for the electrical construction trade in which the applicant worked in the electrical construction trade for a minimum of eight thousand hours; or

(B) Evidence that any journey level category applicant has worked in the electrical construction trade for a minimum of sixteen thousand hours.

(iii) All appropriate fees as listed in WAC 296-46B-909.

(c) The individual obtained the reciprocal state's certificate of competency as a journey level or specialty electrician by examination.

(20) An individual is not eligible for a reciprocal electrician certificate of competency if the individual:

(a) Has failed to renew a similar Washington electrician certificate of competency as required in RCW 19.28.211; or

(b) Has a similar Washington electrician certificate of competency in suspended, revoked, or inactive status under this chapter; or

(c) Owes money as a result of an outstanding final judgment(s) to the department; or

(d) Has taken and failed a Washington exam for the certificate being applied for within the past two years.

WAC 296-46B-942 Training certificate required.

General.

(1) To work in the electrical construction trade as an electrical trainee, an individual must possess, wear, and visibly display a current valid electrical training certificate, learning the trade in the proper ratio, per RCW 19.28.161, under the supervision of a certified master journey level electrician, journey level electrician, master specialty electrician working in their specialty, or specialty electrician working in their specialty.

The trainee must meet all the requirements of WAC 296-46B-940 related to visibly displaying a current certificate and having a valid photo identification on his/her person.

Unless working in a specialty, apprentices and individuals learning the electrical construction trade must have in their possession proof of apprenticeship or journey level training program registration. They must show their apprenticeship or training program registration documents to an authorized representative of the department at the representative's request.

(2) An active training certificate is required for all individuals throughout the individual's enrollment and matriculation in an approved construction electrician training school program described in RCW 19.28.191. A training certificate is required to work in the electrical construction trade if an individual does not:

(a) Possess a current journey level certificate of competency issued by the department;

(b) Possess a current specialty electrician certificate of competency issued by the department while working in that specialty's scope of work; or

(c) Is not working in exempt status as allowed by chapter 19.28 RCW.

(3) Trainees who have had their training certificates revoked or suspended (during the duration of the revocation or suspension) will not be issued a training certificate.

Original training certificates.

(4) The department will issue an original training certificate when the trainee applicant submits a complete training certificate application including:

(a) Date of birth, mailing address, Social Security number; and

(b) All appropriate fees as listed in WAC 296-46B-909.

All applicants for an electrical training certificate must be at least 16 years of age. The original training certificate will be valid for two years. If an individual has previously held an electrical training certificate, then that individual is not eligible for a subsequent original training certificate.

Specialty specific - Zero percent and 75 percent supervision modified training certificates.

(5) For specialties as allowed in Table 945-1 (i.e., specialties with 720 minimum hours of work experience required to be eligible for examination):

(a) The department will approve the trainee to take the appropriate specialty competency examination necessary to qualify for a zero percent supervision modified training certificate. To qualify, the trainee applicant must submit a complete zero percent supervision modified training certificate application including:

(i) Date of birth, mailing address, Social Security number;

(ii) Affidavit of experience fulfilling the minimum work experience hours required to qualify for the specialty examination described in Table 945-1; and

(iii) All appropriate fees as listed in WAC 296-46B-909.

Upon successful completion of the appropriate examination, the trainee will be issued a nonrenewable zero percent supervision modified training certificate for the appropriate specialty. The zero percent supervision modified training certificate will be restricted in duration to the time allowed in Table 945-1, note 2.

(b) Prior to the expiration of the zero percent supervision modified training certificate, the individual must submit a complete application for a 75 percent supervision modified training certificate for the appropriate specialty including:

(i) Seventy-five percent supervision training certificate application including: Date of birth, mailing address, Social Security number; and

(ii) All appropriate fees as listed in WAC 296-46B-909.

(c) A trainee may possess multiple (i.e., in different specialties) modified supervision training certificates for specialties where reduced supervision is allowed in Table 945-1. Combination training certificates will not be issued.

Renewal of training certificates.

(6) An individual must apply for renewal of their training certificate on or before the expiration date of the certificate. The individual may not apply for renewal more than 90 days prior to the expiration date. Renewed certificates are valid for two years.

(7) An individual may renew their training certificate after the expiration date if the individual pays the late renewal fee listed in WAC 296-46B-909.

(8) All applicants for training certificate renewal must:

(a) Submit a complete renewal application;

(b) Pay all appropriate fees; and

(c) Complete the approved basic trainee classes required by WAC 296-46B-970. Basic trainee classes are only valid when all the requirements of WAC 296-46B-970 are completed.

(d) Within 180 days after the expiration date of an electrical training certificate, the individual, if not enrolled in a department approved apprenticeship program, must submit a completed, signed, and notarized affidavit(s) of experience for all hours of experience gained since the individual's last training certificate was effective. Affidavits must be received by the department within 180 days after the expiration date of an electrical training certificate.

Employers are required to provide the necessary documentation and signed affidavit of experience to the trainee within 20 days after the trainee requests the affidavit. See WAC 296-46B-942(12). See WAC 296-46B-985(4) for the penalty for providing a false or inaccurate affidavit of experience. If the individual is enrolled in a department approved apprenticeship program, the program may submit the required affidavit(s) of experience upon the individual's completion of the required experience hours without cost to the individual. The affidavit of experience must accurately attest to:

(i) The electrical installation work performed for each employer the individual worked for in the electrical trade during the previous period;

(ii) The correct electrical category the individual worked in; and

(iii) The actual number of hours worked in each category under the proper supervision of a Washington certified, master journey level electrician, journey level electrician or appropriate master specialty electrician or specialty electrician under that specific training certificate. If a trainee possesses multiple training certificates, an affidavit must be submitted for each training certificate for the hours worked under that specific training certificate.

If the individual is enrolled in a department approved apprenticeship program, the program may submit the required affidavit(s) of experience upon the individual's completion of the required experience hours without cost to the individual.

(9) An individual may not renew a training certificate until the required hours of basic classroom education have been completed.

(10) An individual may renew a suspended training certificate by submitting a complete renewal application including obtaining and submitting the basic trainee class education required for renewal. However, the certificate will remain in a suspended status for the duration of the suspension period.

(11) An individual will not be issued a renewed or reinstated training certificate if the individual owes the department money as a result of an outstanding final judgment under chapter 19.28 RCW.

(12) The individual should ask each employer and/or apprenticeship training director for an accurately completed, signed, and notarized affidavit of experience for the previous certification period. The employer(s) or apprenticeship training director(s) must provide the previous period's affidavit of experience to the individual within 20 days of the request. If an individual is enrolled in an approved electrical construction trade apprenticeship program under chapter 49.04 RCW, the individual and their apprenticeship training director and/or each employer must give the department an accurately completed, signed, and notarized affidavit of experience accurately attesting to:

(a) The electrical installation work the individual performed in the electrical trade during the previous certification period;

(b) The correct electrical category the individual worked in; and

(c) The actual number of hours worked in each category under the proper supervision of a Washington certified master journey level electrician, journey level electrician or appropriate master specialty or specialty electrician for each employer. For apprentices enrolled in a registered apprenticeship program, the training director or their designated authorized signer are the only authorized signatures the department will accept on affidavits of experience.

(13) The employer(s) and/or apprenticeship training director(s) or their designated authorized signer must sign and have notarized the affidavit of experience attesting to the accuracy of all information contained in the affidavit.

(14) The trainee, supervising electrician, contractor, and assigned administrator or master electrician are responsible for ensuring compliance with subsection (13) of this section. See WAC 296-46B-985 and 296-46B-990 (3)(c) and (f) for information about failing to submit or submitting false/fraudulent documents. Falsifying documents may be considered perjury and might result in criminal prosecution, civil penalty, or certificate revocation or suspension.

Trainees without supervision present on the job site.

(15) When the supervising electrician is found to not be present on the job site, the trainee may be given a form by the inspector that must be fully completed and returned or postmarked within 24 hours to the inspector. The supervising electrician must sign the statement for the trainee if appropriate supervision was provided. If the supervising electrician fails or refuses to assist the trainee in completing the form, the trainee must return the form with a signed and dated statement stating the supervising electrician's name and saying that the supervising electrician refused to assist.

Trainees seeking a journey level electrician certificate - Working with no supervision.

(16) Trainee seeking a general **(01)** journey level electrician certificate of competency. After review by the department, a trainee may be issued a six-month, nonrenewable unsupervised electrical training certificate that will allow the individual to work without supervision if the trainee:

(a) Has submitted a complete application for an unsupervised electrical training certificate;

(b) Has worked over 7,000 hours properly supervised not to include more than 4,000 of specialty experience;

(c) Has successfully completed or is currently enrolled in an approved apprenticeship program or an electrical construction trade program in a school approved by the board of community and technical colleges;

(d) Has paid all appropriate training certificate fees listed in WAC 296-46B-909;

(e) Is currently working for and continues to work for a licensed electrical contractor that employs at least one certified journey level or specialty electrician in the appropriate specialty; and

(f) Has not previously failed a journey level electrician certificate of competency examination (see WAC 296-46B-960(11)).

Trainees seeking certain specialty electrician certificates - Working with reduced or no supervision.

(17) After review by the department, a trainee may be issued a nonrenewable zero percent supervision training certificate that will allow the individual to work without supervision if the trainee meets the requirements in subsection (5) of this section.

(18) Electrical trainees may work unsupervised when installing HVAC/R thermostat cable when the HVAC/R system consists of a single thermostat in one- and two-family dwelling units where line voltage power has not been connected to the dwelling's electrical system.

WAC 296-46B-945 Qualifying for master, journey level, specialty electrician examinations.

(1) General.

(a) All applicants must be at least 16 years of age.

(b) All applicants, from in or out of state, must demonstrate the completion of basic trainee classes described in WAC 296-46B-970 (4)(c)(ii)(D).

(i) Twenty-four hours where 2,000 or more; but less than 4,000 hours of work experience is required.

(ii) Forty-eight hours where 4,000 or more; but less than 6,000 hours of work experience is required.

(iii) Seventy-two hours where 6,000 or more; but less than 8,000 hours of work experience is required.

(iv) Ninety-six hours where 8,000 or more of work experience is required.

Qualifying for the master electrician examination.

(2) An individual may take the master electrician's certificate of competency examination if the individual meets the requirements described in RCW 19.28.191 (1)(a) or (b).

Qualifying for the master electrician examination from out-of-state.

(3) No credit may be applied from out-of-state toward qualifying for a master electrician certificate of competency examination.

Qualifying for the journey level electrician competency examination.

(4) Except as provided under subsection (5) of this section, to qualify to take the journey level electrician's certificate of competency examination, an individual must have:

(a) Successfully completed the work experience and education requirements of an 8,000 hour electrical construction trade apprenticeship program approved under chapter 49.04 RCW. Four thousand of the hours must be new industrial or commercial electrical installations under the supervision of a master journey level electrician or journey level electrician and not more than a total of 4,000 hours in all specialties under the supervision of a master journey level electrician, journey level electrician, master specialty electrician working in that electrician's specialty, or specialty electrician working in that electrician's specialty.

Electrical construction training hours gained in specialties requiring less than two years (i.e., 4,000 hours) will not be credited towards qualification for a journey level electrician examination.

(b) Successfully completed an 8,000 hour electrical construction trade apprenticeship program in another jurisdiction equivalent to an apprenticeship program approved under chapter 49.04 RCW. Four thousand of the hours must be new industrial or commercial electrical installations;

(c) An out-of-state journey level electrician certificate obtained through examination by a state licensing jurisdiction requiring at least 8,000 hours of supervised experience in the electrical construction trade installing and maintaining electrical wiring and equipment for installations of a type regulated under this chapter. Four thousand of the hours must be new industrial or commercial electrical installations. All experience applied toward qualifying for examination must be experience gained in the state that issued the certificate or military experience or both. Credit allowed for military service shall not exceed that allowed in (e) of this subsection and subsection (12) of this section. Documentation of experience shall be the same as required in subsection (10) of this section;

(d) At least 16,000 hours of out-of-state experience in the electrical construction trade installing and maintaining electrical wiring and equipment for installations of a type regulated under this chapter. Four thousand of the hours must be new industrial or commercial electrical installations. Work experience documentation submitted to prove the candidate has worked the hours claimed must be an original notarized letter of work experience accompanied by documentation, see subsection (8) of this section, that can be used to verify the individual has worked the hours being requested. Documentation must be provided by:

(i) An appropriately state-licensed electrical contractor;

(ii) A registered apprenticeship training director;

(iii) A nationally recognized contractor/labor organization; or

(iv) The individual's lawful employer.

(e) Eight thousand hours of experience in the electrical construction trade installing and maintaining electrical wiring and equipment for installations of a type regulated under this chapter while serving in a construction battalion in the armed forces of the United States.

The trainee and their employer and/or apprenticeship training director must attest to the accuracy of all information contained on affidavits of experience and apprenticeship graduation certificates used to verify eligibility for the examination.

(5) Until July 1, 2026, notwithstanding RCW 19.28.161 (2)(a)(i) and 19.28.191 (1)(c)(i), the department shall permit:

(a) A person issued an electrical training certificate to work to gain the experience required to qualify for the journey level electrician certification examination without registering in an apprenticeship program approved under chapter 49.04 RCW or equivalent out-of-state apprenticeship program if before July 1, 2023, the trainee has:

(i) Three thousand hours of lawful experience worked in the electrical construction trade regulated under this chapter; or

(ii) Completed a two-year training school program pursuant to RCW 19.28.191 (1)(e).

(b) Electrical trainees described in (a) of this subsection to qualify for the journey level electrician certification examination without completing the work and education requirements of an apprenticeship approved under chapter 49.04 RCW or completing an equivalent out-of-state apprenticeship program. To be eligible to take the examination for a journey level certificate of competency, the applicant must demonstrate 8,000 hours of lawful experience working in the electrical construction trade regulated under this chapter. Four thousand of the hours must be new industrial or commercial electrical installations.

(c) Candidates shall only qualify for examination under temporary allowances in (b) of this subsection if their applications for examination and supporting documentation are received by the department before July 1, 2026.

Qualifying for a specialty electrician certificate of competency or examination.

(6) After review and approval by the department, an individual may qualify for a specialty electrician's examination and certificate of competency if the individual held a current electrical training certificate, and has worked for an employer who employs at least one certified master journey level electrician, journey level electrician, appropriate master specialty electrician, or appropriate specialty electrician on staff and the individual:

(a) Has been employed, in the electrical construction trade, under the direct supervision of an appropriate electrician in the appropriate specialty as follows:

Table 945-1 Experience Hours

Specialty	Minimum Hours of Work Experience Required to be Eligible for Examination[(4)(5)]	Minimum Hours of Work Experience Required for Certification
Residential certificate **(02)**	4,000[(3)]	4,000
Pump and irrigation certificate **(03)**	4,000[(3)]	4,000
Domestic pump certificate **(03A)**	720[(1)(2)]	2,000[(6)]
Signs certificate **(04)**	4,000[(3)]	4,000
Limited energy system certificate **(06)**	4,000[(3)]	4,000
HVAC/refrigeration system certificate **(06A)**	4,000[(3)]	4,000[(7)]
HVAC/refrigeration – Restricted **(06B)**	1,000[(1)(2)]	2,000[(6)]
Nonresidential maintenance certificate **(07)**	4,000[(3)]	4,000
Nonresidential lighting maintenance and lighting retrofit certificate **(07A)**	720[(1)(2)]	2,000[(6)]
Residential maintenance certificate **(07B)**	720[(1)(2)]	2,000[(6)]
Restricted nonresidential maintenance certificate **(07C)**	1,000[(1)(2)]	2,000[(6)]

Specialty	Minimum Hours of Work Experience Required to be Eligible for Examination[4][5]	Minimum Hours of Work Experience Required for Certification
Appliance repair certificate **(07D)**	720[1][2]	2,000[6]
Equipment repair certificate **(07E)**	1,000[1][2]	2,000[6]
Door, gate, and similar systems certificate **(10)**	720[1][2]	2,000[6]

Notes: [1] Until the examination is successfully completed, the trainee must work under 100 percent supervision. Once the appropriate examination is successfully completed, the modified supervision trainee may work under zero percent supervision.

[2] The trainee may have only one zero percent supervision certificate in a specialty (valid for no more than two years). If the trainee has not gained the required work experience by the time the zero percent supervision certificate has expired, the trainee must get a 75 percent supervision certificate and work under supervision until all required work experience hours are gained and credited towards the minimum work experience requirement.

[3] This specialty is not eligible for unsupervised trainee status as allowed in chapter 19.28 RCW.

[4] The trainee and their employer and/or apprenticeship training director must attest to the accuracy of all information contained on affidavits of experience used to verify eligibility for the examination.

[5] Neither previous work experience credit nor training school credit is allowed as a substitute for the initial hours of minimum work experience required to be eligible for examination unless the trainee's work experience hours under direct supervision are provided as required in RCW 19.28.191 (1)(d)(ii).

[6] Electrical construction training hours gained in specialties requiring 2,000 hours or less for certification will not be credited towards qualification for journey level electrician or any of the 4,000 hour specialties, except as allowed by [7], below.

[7] The 2,000 minimum hours of work experience required for certification as an HVAC/refrigeration-restricted **(06B)** specialty electrician may be credited as 2,000 hours towards the 4,000 minimum hours of work experience required for certification as an HVAC/refrigeration **(06A)** specialty electrician. Hours of work experience credited from the HVAC/refrigeration-restricted **(06B)** specialty cannot be credited towards qualification for taking the general electrician **(01)** examination or minimum work experience requirements.

[8] Experience hours may be coincidentally credited towards qualifying for electrician and plumber certifications. See RCW 19.28.191 (1)(d)(iv).

(b) Or has completed an appropriate two-year apprenticeship program in the electrical construction trade that is registered with the state apprenticeship council while working under the direct supervision of an electrician in the appropriate specialty in the proper ratio, per RCW 19.28.161.

Qualifying for a certificate of competency when the Washington electrical work experience is exempt from certification requirements in RCW 19.28.261.

(7) After review and approval by the department, an individual may be granted work experience credit to take the specialty electrician's competency examination when an original notarized letter of work experience accompanied by verifiable documentation is provided. See subsection (8) of this section. For journey level competency examination candidates, see subsection (4) of this section for requirements.

For the purposes of this section, exempt work does not include work performed on property owned, in whole or part, by the individual seeking credit.

All exempt individuals must have a valid electrical training certificate when working to gain electrical work experience.

Work experience requested by an individual for telecommunications work must be gained while working for **(01)** general electrical, **(02)** residential, or **(06)** limited energy system electrical contractors as allowed by those scopes of work. When the work was performed, the individual must have a valid training certificate, be under the supervision of an appropriately certified journey level, residential or limited energy electrician, and be in compliance with RCW 19.28.191.

General - Qualifying hours gained by applicants seeking work experience credit without a Washington electrician training certificate.

(8) The type of on-the-job work experience must be similar to the credit being applied for and lawfully gained in the state or other entity where the work was performed. The individual must submit verifiable documentation (e.g., payroll, time sheets, permits, supervision, etc.) that the department may use to ascertain the type of work performed and the number of hours worked for each type (i.e., specialty) of work.

Training hours credited for specialties requiring less than two years (i.e., 4,000 hours) may not be credited towards qualification for general journey level electrician.

The documentation must include a complete description of the individual's usual duties with percentages attributed to each type (e.g., wiring, material handling, shop, low voltage, etc.)

The department may reduce the number of hours allowed if the:

(a) Individual did not have supervision during the training period when supervision was required by the jurisdiction where the training occurred;

(b) Training hours are not related to electrical construction;

(c) Training hours are not related to the specialty being applied for;

(d) Documentation submitted by the individual does not fully verify the requested work experience; or

(e) Work credit was not lawfully gained.

Training school credit.

(9) No more than 50 percent of the minimum work experience needed to qualify for specialty electrician certification is allowed for any training school program (e.g., a specialty requiring 2,000 hours of minimum required work experience may receive no more than 1,000 hours credit from an electrical construction training program).

See RCW 19.28.191 (1)(e) for training school credit allowed for journey level applicants.

See WAC 296-46B-971 for additional information on training schools.

Qualifying for the journey level/specialty electrician competency examination when work was performed in a state requiring electrician certification for the work performed.

(10) After review and approval by the department, an individual may be granted on-the-job work experience towards qualifying to take the specialty electrician's competency examination for hours worked in the other state when the state certifies to the department:

(a) The type and number of hours of work performed within the state. Credit will not be allowed for work not done within the certifying state.

(b) That the work was legally performed under the other state's licensing and certification requirements; and

(c) The other state's certificate of competency was obtained by examination.

If the experience is for other than a new commercial or industrial installation, the individual must identify the specialty credit desired and provide verifiable documentation identifying the other state's allowed scope of work for the specialty, see subsection (8) of this section.

For journey level competency examination candidates, see subsection (4) of this section for requirements.

Qualifying for the journey level/specialty electrician competency examination when work was performed in a state that does not require electrician certification for the work performed.

(11) After review and approval by the department, an individual may be granted work experience credit to take the specialty electrician's competency examination when an original notarized letter of work experience accompanied by documentation, see subsection (8) of this section, that can be used to verify the individual has worked the hours being requested is provided by:

(a) An appropriately state licensed electrical contractor;

(b) Registered apprenticeship training director;

(c) Nationally recognized contractor/labor organization; or

(d) The individual's lawful employer.

For journey level competency examination candidates, see subsection (4) of this section for requirements.

Military experience.

(12) After review and approval by the department, an individual who has worked in the electrical construction trade performing work described in WAC 296-46B-920 while serving in the armed forces of the United States may be eligible to take the examination for the certificate of competency as a specialty electrician. Credit may be allowed for hours worked or training received.

If an individual has military experience in a specialized electrical field (e.g., rating) that is similar to a specialty electrician category listed in WAC 296-46B-920, credit may be allowed toward the appropriate specialty certificate. Nuclear, marine, shipyard, shipboard, radar, weapons, aeronautical experience, or similar experience may be acceptable for no more than 50 percent of the minimum required work experience for qualifying for electrician examination.

The department will evaluate and determine whether the submitted experience is related specifically to the electrical construction/maintenance trade regulated by chapter 19.28 RCW.

For allowances for crediting military experience toward qualifying for a journey level competency examination, see subsection (4)(e) of this section and RCW 19.28.191 (1)(e) (effective July 1, 2023).

Experience in another country.

(13) After review and approval by the department, and if an individual has a journey level electrician certificate from a country outside the United States that requires that at least four years of electrical construction training and certification is obtained by examination, the individual may be eligible for 4,000 hours of the specialty credit allowed towards the qualification to take the Washington journey level electrician examination.

No more than 4,000 hours of the required training to become a Washington journey level electrician may be for work described for specialty electricians or technicians in WAC 296-46B-920. In addition to the maximum of 4,000 hours credit that may be allowed by this subsection, an additional 4,000 hours of new commercial/industrial experience must be obtained using a training certificate in the state while registered in a journey level electrician apprenticeship program required by RCW 19.28.161 (2)(a)(i) (effective July 1, 2023) under the supervision of a master journey level electrician or journey level electrician.

Documentation substantiating the individual's out of country experience must be submitted in English.

(14) Out of country experience credit is not allowed toward a specialty electrician certificate.

(15) Canadian journeyperson construction electricians with at least four years of electrical construction training who have obtained a construction electrician Red Seal endorsement by successfully completing a Red Seal examination are eligible to take the examination for the journey level electrician certificate of competency if they have possessed a Red Seal endorsement for one year.

WAC 296-46B-960 Administrator and electrician certificate of competency examinations.

General.

(1) The minimum passing score on any examination or examination section is 70 percent. If examination is requested to be administered by the department, an application is required and the examination must be successfully completed within one year of application or the individual must submit a new application for exam including all appropriate fees.

(2) All examinations are open book.

(a) Candidates may use:

(i) Any original copyrighted material;

(ii) A silent, nonprinting, nonprogrammable calculator that is not designed for preprogrammed electrical calculations;

(iii) Copies of chapter 19.28 RCW and this chapter; or

(iv) A foreign language dictionary that does not contain definitions.

(b) Candidates may not use:

(i) Copies of copyrighted material;

(ii) Copies of internet publications, except for RCWs or WACs;

(iii) Personal notes; or

(iv) A personal computing device of any type other than the calculator in (a)(ii) of this subsection.

(3) Administrator, master electrician, and electrician examinations may consist of multiple sections. For all administrator examinations, all sections must be successfully completed within a one-year examination period after beginning the examination. For all master electrician and electrician examinations, all sections must be successfully completed within a one-year examination period beginning with the date of the examination approval. Within the one-year examination period, the candidate does not have to retake any sections successfully

completed within the examination period. If all sections are not successfully completed within the one-year period, the candidate must begin a new examination period and retake all sections.

Special accommodations for examination.

(4) An applicant for an examination who, due to a specific physical, mental, sensory impairment, requires special accommodation in examination procedures, may submit a written request to the chief electrical inspector for the specific accommodation needed.

(a) The applicant must submit an individualized written opinion from a physician or other appropriate specialist:

(i) Verifying the existence of a specific physical, mental, sensory impairment;

(ii) Stating whether special accommodation is needed for a specific examination;

(iii) Stating what special accommodation is necessary; and

(iv) Stating if extra time for an examination is necessary and if so, how much time is required. The maximum allowance for extra time is double the normal time allowed.

(b) The written request for special accommodation and individualized written opinion should be submitted to the department only after the applicant has made application and received an examination approval from the department.

(5) An applicant for an examination who, due to limited English proficiency, requires special accommodation in examination procedures, including requesting extra time for examination, may submit a written request to the chief electrical inspector. The maximum allowance for extra time is double the normal time allowed. The written request should be submitted to the department after the applicant has made application and received an examination approval from the department.

Failed examination appeal procedures.

(6) Any candidate who takes an examination and does not pass the examination may request a review of the examination.

(a) The department will not modify examination results unless the candidate presents clear and convincing evidence of error in the grading of the examination.

(b) The department will not consider any challenge to examination grading unless the total of the potentially revised score would result in a passing score.

(7) The procedure for requesting an informal review of examination results is as follows:

(a) The request must be made in writing to the chief electrical inspector and must be received within 20 days of the date of the examination and must request a rescore of the examination. The written request must include the appropriate fees for examination review described in WAC 296-46B-909.

(b) The following procedures apply to a review of the results of the examination:

(i) The candidate will be allowed one hour to review their examination.

(ii) The candidate must identify the challenged questions of the examination and must state the specific reason(s) why the results should be modified with multiple published reference material supporting the candidate's position.

(iii) Within 15 days of the candidate's review, the department will review the examination and candidate's justification and notify the candidate in writing of the department's decision.

Failing an administrator certificate exam or electrician certificate of competency examination.

(8) Anyone failing an administrator or electrician competency examination may retake the examination by making arrangements with the testing agency and paying the retesting fee.

(9) If the individual makes a failing score, the individual must wait two weeks before being eligible to retest.

(10) If the individual fails a part of an electrician, administrator, or master electrician examination three times within a one-year period, the individual must wait three months to retake the failed portion of the examination.

(11) Anyone failing an electrician competency examination may continue to work in the electrical trade if they have a valid electrical training certificate and work under the direct supervision of a certified journey level or specialty electrician in the proper ratio, per RCW 19.28.161.

Cheating on an examination.

(12) Anyone found cheating on an examination, attempting to bribe a proctor or other agent involved in administering an examination, or using inappropriate materials/equipment during an examination will be required to wait at least 11 months before being allowed to reexamine. All such reexaminations will be administered by the department in Tumwater, Washington and the candidate will be required to apply and schedule for the examination with the chief electrical inspector. The department may also file a civil penalty action under chapter 19.28 RCW.

Examination confidentiality.

(13) All examination questions are confidential. Examination candidates and persons who have taken an examination are not allowed to copy or otherwise make note of or share examination content, in any manner, outside the individual's examination environment. Examination candidates must agree, prior to beginning an examination, to keep all examination content confidential. The department may also file a civil penalty action under chapter 19.28 RCW.

WAC 296-46B-970 Continuing education and classroom education requirements.

(1) DEFINITIONS - For purposes of this section.

"Applicant" means the entity submitting an application for review.

"Application" means a submittal made by an applicant seeking instructor or class approval.

"Calendar day" means each day of the week, including weekends and holidays.

"Class" means continuing education or basic trainee class.

"Currently adopted code," for this section means the code adopted in WAC 296-46B-010(1) or any more recently published National Electric Code.

"Date of notification" means the date of a request for additional information from the department or the approval/denial letter sent to the applicant by the department.

"Electrical theory" means basic principles of electricity such as: Magnetism, ohm's law, and circuit properties such as voltage, current, power, resistance, inductance, capacitance, reactance, impedance, etc., in series, parallel, and combination AC and DC circuits.

"Examination" is any examination required by this section. Each examination must be unique and must provide randomized questions, except for classroom training. Each examination question bank must be at least two times larger than the number of questions in any individual examination. Examinations must not direct or point the individual to a correct answer or reference. Individuals must be responsible to determine the correct answer without the assistance of the sponsor. No more than twenty percent of an examination's questions may have a true/false answer. Competency is demonstrated by scoring at least seventy-five percent on the examination.

"Individual" means a master electrician, administrator or electrician seeking credit for continuing education or a trainee seeking credit for basic trainee class for renewal or certification.

"Instructor" means an individual who is authorized to instruct an approved continuing education or basic trainee class.

"Working day" means Monday through Friday, excluding state of Washington holidays.

(2) GENERAL.

(a) The department and the electrical board have the right to monitor all approved classes without notice and at no charge.

If the department or electrical board determines that the class or instructor does not meet or exceed the minimum requirements for approval, course length, or instructor qualifications, the department may revoke the class and/or instructor approval and/or reduce the number of credited hours for the class.

(b) Department-offered classes and the instructors used for department classes are automatically approved.

(c) Instructors who meet the minimum requirements using subsection (5)(d)(iv) of this section may only instruct classes sponsored by the manufacturer(s) who verified the instructors' qualifications.

(d) An individual will not be given credit for the same approved continuing education class taken more than once. A course sponsor may not submit an individual's name on a roster(s) for multiple classes (i.e., multiple class numbers) when the classes are given simultaneously (e.g., code update, industry related, and/or basic trainee class that have similar class content given during the same class session). Credit will not be granted for a class that is not approved per this section.

(e) Electrical administrators, master electricians, and electricians:

(i) To be eligible for renewal of an administrator certificate, master electrician or electrician certificate of competency, the individual must have completed at least eight hours of approved continuing education for each year of the prior certification period. The individual is not required to take the classes in separate years.

(A) At least eight hours of the total required continuing education must be on the changes in the currently adopted code.

(B) Four hours of the required continuing education must be on the currently adopted chapter 19.28 RCW and/or its related WAC.

(ii) An individual changing an electrical administrator and an electrician certificate of competency into a master electrician's certificate of competency as allowed in RCW 19.28.191 (1)(a) or (b) must have completed at least eight hours of approved continuing education for each

year of the electrician's prior certificate period. The individual is not required to take the classes in separate years.

(A) At least eight hours of the total required continuing education must be on the changes in the currently adopted code.

(B) Four hours of the required continuing education must be on the currently adopted chapter 19.28 RCW and/or its related WAC.

(iii) Any portion of a year of a prior administrator or electrician certificate period is equal to one year for the purposes of the required continuing education.

(iv) An individual who has both an electrician certificate and an administrator certification may use the same class to fulfill the requirements for continuing education.

(f) Training certificates: To be eligible for renewal of a training certificate, the individual must have completed:

(i) At least forty-eight hours of approved basic trainee classes. The individual cannot use a basic trainee class as credit for the continuing education requirements for renewing an electrician or administrator certificate(s) when the class is also used to satisfy the training certificate renewal requirements; or

(ii) Equivalent electrical training classes taken as a part of an approved:

• Apprenticeship program under chapter 49.04 RCW; or

• Electrical training program under RCW 19.28.191 (1)(h).

Equivalent classes must be submitted to and approved by the chief electrical inspector thirty calendar days prior to offering the class.

(g) A continuing or basic trainee class attended or completed by an individual before the class's effective date cannot be used to meet the certificate renewal/certification requirements.

(3) CLASS AND INSTRUCTOR - GENERAL APPROVAL PROCESS.

(a) The department will review the application for completeness and conformance with the requirements in this section.

(b) The department will deny approval of applications that do not meet the minimum requirements.

(c) All applications will be considered to be new applications (i.e., Classes and instructors may not be renewed. All applications must include all information necessary to show conformance with the minimum requirements).

(d) Application process:

(i) The applicant must submit a complete application to the department at least thirty calendar days prior to offering or instructing a class.

(ii) The department will only consider material included with the application when reviewing an application.

(iii) All applications must include:

(A) Applicant's name, address, contact name, email address, and telephone number;

(B) All required fees.

(e) Review process:

(i) When the application is received:

(A) The department must review the application for completeness within seven working days after receipt.

(B) If the application is incomplete, the department must, within two working days, notify the applicant of the status of the review and what additional information is required.

• The applicant must provide any additional information requested by the department within five working days after the date of notification.

• The department will deny the application if the additional required information is not received within the five working days after the date of notification for additional information.

(C) The department must complete the review and approval/denial process within fifteen working days upon receipt of a complete application or additional requested information and within two working days notify the applicant of the approval/denial in writing or electronically.

(ii) A notification of denial must include:

(A) Applicant's name and telephone number;

(B) Date of denial;

(C) Sponsor's name and class title if applicable;

(D) Instructor's name if applicable; and

(E) The reason for denial.

(iii) A notification of approval:

(A) For classes must include:

• Applicant's name and telephone number;

• Sponsor's name and telephone number;

• Sponsor number;

• Class title;

• Class number;

• Number of hours approved for the class. The department may reduce the hours requested in the application if the review shows that the requested number of hours is excessive;

• Effective date for this class;

• Expiration date of class;

• Category for which the class is approved (i.e., code update, RCW/WAC update, industry related, basic trainee class, or pumping industry);

• Type of class (i.e., classroom, correspondence, internet); and

• Whether the class is open to the public.

(B) For instructors, must include:

• Applicant's name and telephone number;

• Instructor's name and telephone number;

• Effective date for the approval; and

• Expiration date of the approval.

(iv) The applicant may request a review, by the electrical board, of the department's denial or modification of the application. The applicant must submit a written request for review to the Secretary of the Electrical Board - Chief Electrical Inspector - Within twenty days of notification of the denial/modification. The request must include a review fee of one hundred nine dollars and fifty cents. The review fee is nonrefundable.

(4) CLASS APPROVAL PROCESS.

(a) Class applications must include:

(i) Sponsor's name, address, contact name, email address, telephone number, and sponsor's number (if a class was previously approved);

(ii) Class title;

(iii) Number of education hours requested for the class;

(iv) Category of class for which approval is sought (e.g., code update, RCW/WAC update, industry related, basic trainee class, or pumping industry);

(v) Statement that all requirements of this section will be complied with;

(vi) Statement of whether the class is open to the public;

(vii) Class syllabus (e.g., presentation method(s), description of the training, specific NEC/RCW/WAC articles taught, theory subjects, time allowed for various subject matter components, examination question samples, etc.) describing how the class meets the minimum requirements, described below, for the type of class being offered;

(viii) The applicant must show that the sponsor regularly employs at least one staff member who meets the requirements for instructors in this section;

(ix) List of resources (e.g., texts, references, etc.).

(b) Class approval will be valid for three years except:

(i) If the class is "code update" and a new NEC is adopted by the department within the class approval period, the class approval will be considered automatically revoked; or

(ii) If the class is modified after the application is approved, the class approval will be considered automatically revoked (i.e., change in syllabus, hours, examination, etc.).

(c) Minimum requirements:

(i) Class length:

(A) The minimum allowed length of a class is two hours; however, the minimum length for a basic trainee class is four hours that may be delivered in multiple classroom components of not less than two hours each.

(B) Class length must be based on two-hour increments (e.g., 2, 4, 6, 8, etc.)

(C) Class length must be based on the following:

• Classroom instruction will be based on the total hours the individual is in the classroom. A continuing education class may be divided into multiple components so long as each component is not less than two hours in length and all components are completed within a one-month period. A basic trainee class may be divided into multiple components so long as each component is not less than two hours in length and all components are completed within a six-month period.

• Distance learning continuing education classes (i.e., correspondence and internet continuing education classes) will be based on clock hours necessary to complete the class if it was presented in a classroom setting.

(ii) Class content:

(A) Industry-related classes must be based on:

• Codes or rules included in the currently adopted National Electrical Code (see definition of currently adopted), the electrical law/rule;

• Electrical theory based on original copyrighted material that is readily available for retail purchase; and/or

• Materials and methods that pertain to electrical construction, building management systems, electrical maintenance, or workplace electrical safety such as *NFPA 70E - Standard for Electrical Safety in the Workplace*. First aid type classes must be approved and will be limited to four hours of credit towards the individual's total continuing education requirement.

(B) Code update classes must be based on the currently adopted (see definition) National Electrical Code and must specify the code articles to be addressed in the class presentation.

(C) RCW/WAC update classes must be based on the latest adopted versions of chapter 19.28 RCW and/or chapter 296-46B WAC.

(D) All basic trainee classes must be classroom instruction only and based upon basic electrical theory based on original copyrighted material that is readily available for retail purchase, currently adopted (see definition for currently adopted) National Electrical Code, and/or use of the electrical laws or rules. Correspondence and internet classes are not allowed. All basic trainee classes must include an appropriate written competency examination(s) to ensure the participant has mastered the basic concepts of the class. The examination must consist of at least five questions per two hours of class credit.

(E) For all pumping industry classes, curriculum must include fifty percent electrical and fifty percent plumbing instruction.

(F) The sponsor of any distance learning class (e.g., correspondence/internet continuing education) must provide the following additional information with the application:

• How the sponsor will provide an orientation session with the instructor or an affiliated representative of the sponsor.

• The application must include a complete description of any hardware, software, or other technology to be used by the provider and needed by the student to effectively engage in the delivery and completion of the class material.

• In the case of internet based continuing education classes, describe how the class software addresses automatic shutdown after a period of inactivity.

• How will the sponsor provide security to ensure that the student who receives credit for the class is the student who enrolled in and completed the class. The approved sponsor and the student must certify that the student has completed the class and the required number of clock hours.

• The application must describe the process and the acceptable methods of how students can contact approved instructors to answer questions regarding the class.

• The application must describe the consistent and regular interactive events appropriate to the delivery method. The interactive elements must be designed to promote student involvement in the learning process and must directly support the student's achievement of the class learning objectives.

• The application must demonstrate that the class includes the same or reasonably similar information content as a course that would otherwise qualify for the requisite number of clock hours of classroom-based instruction.

• The application must demonstrate how the sponsor determined the number of clock hours requested.

• The application must demonstrate how mastery of the material is evaluated (e.g., describing how the material is divided into major learning units and describing how these learning units are divided into modules of instruction, describing how the student's progress toward completion of the mastery requirement will be measured, and describing how the class will provide a mechanism of individual remediation to correct any deficiencies in each module of instruction).

(5) INSTRUCTOR APPROVAL PROCESS:

(a) Except first-aid training, all instructors must be approved per this section.

(b) The instructor application will include:

(i) Instructor's name, address, telephone number, email address;

(ii) Copies of credentials or other information showing conformance with the instruction minimum qualifications.

(c) Instructor approval will be valid for three years except:

(i) If the instructor's credentials are invalidated (e.g., suspension or revocation by the issuing entity) for any reason, approval will be automatically revoked.

(ii) When the instructor approval expires or is revoked, a new application must be submitted to regain approved instructor status.

(d) Minimum requirements:

The application must show that the instructor meets one of the following:

(i) Has a valid Washington administrator, master electrician, or electrician's certificate and has appropriate knowledge of and experience working as an electrical/electronic trainer; or

(ii) Is currently an instructor in a two-year program in the electrical construction trade licensed by the Washington work force training and education coordinating board. The instructor's normal duties must include providing electrical/electronic education; or

(iii) Is a high school vocational teacher, community college, college, qualified instructor with a state of Washington approved electrical apprenticeship program, or university instructor. The instructor's normal duties must include providing electrical/electronic education; or

(iv) Works for and is approved by a manufacturer of electrical products to teach electrical continuing education; or

(v) Is an electrical engineer registered under chapter 18.43 RCW; or

(vi) Subject matter experts approved by the chief electrical inspector who can demonstrate appropriate knowledge of, and experience in the electrical construction trade and working as an electrical/electronic trainer.

(6) FORMS:

(a) The department will develop an appropriate form(s) for the applicant's use when submitting for instructor or class approval;

(b) Applicants must use the department's form when submitting an application for review.

(7) CLASS ATTENDANCE:

(a) The department is not responsible for providing verification of an individual's continuing education or basic trainee classroom training history with the class sponsor;

(b) Electrical approved classes offered in Washington:

(i) The sponsor must provide the department with an accurate online course attendance/completion roster for each class given. Class attendance will only be verified based on the online attendance/completion roster provided by the sponsor.

(A) Within seven days of a student completing the class, the course sponsor must provide the attendance/completion roster in an internet format provided by the department.

(B) The attendance/completion roster must show each individual's name, Washington certificate number, class number, and date of completion.

(ii) Individuals will not be granted credit for a class unless the sponsor's online attendance/completion roster shows the individual successfully completed the class.

(c) For classes approved under chapter 18.106 RCW for the pumping industry, a class number will be created for electrical continuing education. Sponsors for these classes must verify attendance for the electrical credit using the format described in subsection (b) of this section.

(8) Noncompliance with this section by a course sponsor or instructor.

(a) Before a course sponsor or instructor is revoked or suspended for noncompliance with this section, the course sponsor or instructor will be given written notice of the department's intention to suspend or revoke. The notification will describe the allegations and provide the necessary procedures to request a hearing before the electrical board as described in RCW 19.28.341.

(b) The department may also file a civil penalty action under chapter 19.28 RCW for fraudulent, inaccurate, or material misrepresentation activity.

WAC 296-46B-971 Training schools.

(1) The department must evaluate and approve training school programs in the electrical trade as regulated by chapter 19.28 RCW for equivalency to hours of supervised work experience. Approved training programs must be from a Washington state public community or technical college, or a not-for-profit nationally accredited technical or trade school licensed by the work force training and education coordinating board under chapter 28C.10 RCW.

(2) The minimum total hours for an electrical technical training program must be determined per RCW 19.28.191.

(3) Training school programs must be approved before their graduates may request credit for equivalent work experience hours toward journey level or specialty electrician certification. Until December 31, 2003, existing electrical training programs, in effect after January 1, 2000, may apply for retroactive approval of their program to determine the number of hours that will be credited for the program graduates. After December 31, 2003, all training programs must be approved by the department prior to beginning instruction.

(4) Training schools must submit the curriculum of each journey level or specific specialty electrical training program to the department for approval. The curriculum must include a detailed description of each course that is included in the total training hours required by RCW 19.28.191. The curriculum must be reviewed by the department whenever significant changes in program content or course length are implemented or at an interval not to exceed three years. After department review, the program may be renewed. In evaluating the relevance of the curriculum, the department will consider the following criteria:

(a) Scope of work for the appropriate electrician certification.

(b) Understanding whole systems related to and integrated with electrical equipment installation, maintenance, troubleshooting, and appliance repair (e.g., refrigeration, pumps, hydraulics, thermodynamics, compressed air, and similar systems).

(c) Courses not directly related to electrical technical instruction or specific scope of work, but required to complete the specific training program (i.e., mathematics, technical writing, business, safety, first aid, ergonomics, etc.), must not exceed ten percent of the total student/instructor contact time of the program.

(5) Within thirty days after one or more students successfully completes an accredited training school program, the program must provide the department with a completion roster in an electronic table format. Each roster must include all of the following:

(a) Name of the accredited training school;

(b) Name of the accredited training school program as referred to in the department's letter of accreditation;

(c) Submitter information:

(i) Name;

(ii) Title;

(iii) Email address; and

(iv) Telephone number.

(d) Student information:

(i) Full name;

(ii) Date of first instruction;

(iii) Date of completion; and

(iv) Washington electrical training certificate number.

(6) All school training activities involving electrical work or appliance repair done outside of in-school lab facilities must be done under a valid Washington electrical contractor's license. All students performing such work must have a valid training certificate and work under a supervising journey level or specialty electrician in a ratio, per RCW 19.28.161, in compliance with RCW 19.28.161.

(7) Individuals in a two-year electrical construction trade training program for journey level electrician must obtain the additional two years of work experience required in new industrial or commercial installation prior to the beginning, or after the completion, of the technical school program.

All student electrical training hours obtained when working for contractors or other employers in intern programs arranged by the school must be evaluated as part of the training program hours. Additional work experience credit gained in an intern program is not allowed.

This does not prohibit trainees in a training program for specialty electricians from having concurrent employment and obtaining additional specialty work experience while attending school. All such concurrent work must be documented in an affidavit of experience per WAC 296-46B-942(8).

The following supervision requirements must be met when working as an intern or student:

(a) Intern when working for contractors or other employers as a:

(i) General electrician, there must be not more than one noncertified individual for every certified master journey level electrician or journey level electrician.

(ii) Specialty electrician, there must be not more than two noncertified individuals for every certified master specialty electrician working in that electrician's specialty, specialty electrician working in that electrician's specialty, master journey level electrician, or journey level electrician.

(b) Student when working for a public community or technical college, or not-for-profit nationally accredited trade or technical school licensed by the work force training and education coordinating board under chapter 28C.10 RCW as a journey level or specialty electrician in the training program, the ratio requirements are one certified master specialty electrician working in

that electrician's specialty, specialty electrician working in that electrician's specialty, master journey level electrician, or journey level electrician working as a specialty electrician to no more than four students enrolled in and working as part of an electrical construction program. All such work will be considered to be an integral part of the training program and work experience credit will not be allowed except as a part of the program.

When the ratio of certified electricians to noncertified individuals on a job site is one certified electrician to three or four noncertified individuals, the certified electrician must:

(i) Directly supervise and instruct the noncertified individuals and the certified electrician may not directly make or engage in an electrical installation; and

(ii) Be on the same job site as the noncertified individual for a minimum of one hundred percent of each working day.

The public community or technical colleges, or not-for-profit nationally accredited trade or technical schools must be an appropriately licensed electrical contractor when performing work outside the classroom.

(8) The department will use the criteria in this section to evaluate the hours of credit that may be allowed for United States armed forces experience and training in the electrical construction, electrical maintenance, and appliance repair trades. See WAC 296-46B-945.

WAC 296-46B-975 Electrical audit.

General.

(1) The department may audit the employment records of the electrical contractor or employer to verify the employment status of trainees, assigned administrators, or assigned master electricians.

(2) Every employer or contractor must keep a record of trainee, assigned administrator/master electrician employment so the department may obtain the information it needs to verify electrical trainee, assigned administrator, or assigned master electrician status and trainee work experience. Upon the request of the department's auditors or agents, these records must be made available to the department for inspection within seven business days.

(3) Any information obtained from the contractor or employer during the audit is confidential and is not open to public inspection under chapter 42.17 RCW.

Trainee hours.

(4) The time period covered by a trainee audit will not exceed five years prior to the period included in the last affidavit verifying trainee hours is submitted.

(5) An employer or contractor must maintain payroll records, time cards, or similar records to verify:

(a) The number of hours the trainee worked as a supervised trainee;

(b) The type of electrical work the trainee performed; and

(c) Who provided the trainee's supervision.

(6) The department's audit may include, but will not be limited to, the following:

(a) An audit to determine whether the trainee was employed by the contractor or employer during the period for which the hours were submitted, the actual number of hours the trainee worked, the category of electrical work performed, and who provided the trainee's supervision; and

(b) An audit covering a specific time period and examining a contractor's or employer's books and records which may include their reporting of the trainee's payroll hours required for industrial insurance, employment security or prevailing wage purposes.

Administrator/master electrician - status.

(7) The time period covered by an administrator/master electrician audit will not exceed five years prior to the beginning of the audit.

(8) Every employer or contractor must maintain pay records, time cards, or similar records to verify the work relationship and status of the assigned administrator or master electrician so the department may obtain the information it needs to verify the contractor-administrator/master electrician relationship. Upon the request of the department's auditors or agents, these records must be made available to the department for inspection within seven business days.

(9) The department's audit may include, but will not be limited to, the following:

(a) An audit to determine whether the assigned administrator or assigned master electrician was employed by the contractor or employer during the period assigned which may include their reporting of the assigned administrator's/master electrician's payroll hours required for employment security, prevailing wage, worker's compensation, etc.; and

(b) An audit to determine the full-time supervisory status of the assigned administrator/master electrician.

WAC 296-46B-980 Enforcement—Installations, licensing, and certification requirements.

(1) The department inspects the electrical worksites of individuals, employers, and employees with respect to the methods and installation requirements of chapter 19.28 RCW and this chapter. The department's electrical inspectors and electrical auditors make electrical work inspections. The department's electrical inspectors/auditors verify that all required electrical work permits or labels are obtained prior to beginning any electrical work which requires an inspection. The department's electrical inspectors, electrical auditors, and compliance officers make electrical licensing/certification inspections.

(2) The department ensures that individuals, employers, and employees comply with the electrical licensing and certification requirements of chapter 19.28 RCW and this chapter. To do this, inspections are made by the department's electrical inspectors/auditors and compliance officers.

Compliance officers or electrical inspectors/auditors determine whether:

(a) Each person or entity advertising to do electrical work or doing electrical work on an electrical worksite has a proper license or certificate;

(b) The ratio, per RCW 19.28.161, of certified journey level/specialty electricians to the certified trainees on the job site is correct; and

(c) Each certified trainee is directly supervised by an individual who possesses an appropriate certificate of competency for the type of electrical work being performed.

WAC 296-46B-985 Penalties for false statements or material misrepresentations.

(1) A person who makes a false statement or material misrepresentation on an application, statement of hours, or signed statement to the department may be referred to the county prosecutor for criminal prosecution under RCW 9A.72.020, 9A.72.030, and 9A.72.040. The department may also file a civil action under RCW 19.28.131 or 19.28.271 and may revoke or suspend a certificate under RCW 19.28.241 or 19.28.341.

(2) The department may file a civil action under RCW 19.28.131 or 19.28.271 and may revoke or suspend a certificate of competency under RCW 19.28.341 or 19.28.241 for inaccurate or false reporting of continuing or basic trainee classroom education units on the administrator, master electrician, electrician, or training certificate renewal form.

(3) If the department determines that a course sponsor has issued an inaccurate or incomplete course application or attendance/completion roster, the department may suspend or revoke the course approval and deny future approval of a continuing or basic trainee classroom education course(s) by the course sponsor.

(4) The department may file a civil action under RCW 19.28.271 against both the trainee and the contractor, apprentice training director, or other entity verifying the training hours and may subtract up to two thousand hours of employment from a trainee's total hours if the department determines a false statement or material misrepresentation has been made in an affidavit of experience.

WAC 296-46B-990 Failure to comply with the electrical contractor licensing, administrator certification, or electrician certification laws.

General.

(1) If the compliance officer or electrical inspector/auditor determines that an individual, employer, or employee has violated chapter 19.28 RCW or this chapter, the department will issue a citation that describes the violation.

Suspension or revocation - Of an electrical contractor's license, administrator's certificate, master electrician's certificate of competency, electrician's certificate of competency, or training certificate.

(2) The department may revoke or suspend, for such time as it determines appropriate, an electrical contractor's license, administrator's certificate, master electrician's certificate of competency, electrician's certificate of competency, or training certificate if:

(a) The license, certificate, or permit was obtained through error or fraud;

(b) The license, certificate, or permit holder is judged to be incompetent to work in the electrical construction trade as an electrical contractor, administrator, master electrician, journey level electrician, specialty electrician, electrical technician, or electrical trainee;

(c) For serious noncompliance as described below. See RCW 19.28.241 and 19.28.341 for other grounds and procedures.

(d) The license or certificate holder incompletely or inaccurately reported continuing or basic trainee class education units on an application for renewal; or

(e) The certificate holder falsely, incompletely, or inaccurately reported previous work experience.

The department will deny an application for any license/certificate during the period of revocation or suspension of the same or another license/certificate under chapter 19.28 RCW.

(3) For the purposes of this section, serious noncompliance includes, but is not limited to, any of the following:

(a) Causing or failing to correct a serious violation. A serious violation is a violation of chapter 19.28 RCW or chapter 296-46B WAC that creates a hazard of fire or a danger to life safety. A serious violation is also a violation that presents imminent danger to the public. Imminent danger to the public is present when installations of wire and equipment that convey or utilize electric current have been installed in such a condition that a fire-hazard or a life-safety hazard is present. Imminent danger to the public is also present when unqualified, uncertified, or fraudulently certified electricians or administrators; or unlicensed or fraudulently licensed contractors are continuously or repeatedly performing or supervising the performance of electrical work covered under chapter 19.28 RCW. For the purposes of this section, a certified electrician is considered qualified, provided the electrician is working within his or her certification;

(b) The license or certificate was obtained, used, or allowed to be used through error or fraud;

(c) Submitting a fraudulent document to the department;

(d) Willful, intentional, or continuous noncompliance with the provisions of chapter 19.28 RCW or this chapter. For the purposes of this section, continuous noncompliance will be defined as three or more citations demonstrating a disregard of the electrical law, rules, or regulations within a period of three years, or where it can be otherwise demonstrated that the contractor, master electrician, electrician, or administrator has continuously failed to comply with the applicable electrical standards;

(e) Failure to make any books or records, or certified copies thereof, available to the department for an audit to verify the hours of experience submitted by an electrical trainee;

(f) Making a false statement or material misrepresentation on an application, statement of hours, or signed statement required by the department;

(g) The certificate holder falsely or inaccurately reported continuing or basic trainee class education units on an application for renewal;

(h) Installing a shortened rod/pipe grounding electrode, improper splicing of conductors in conduits/raceways or concealed within walls, or installing a fake equipment grounding conductor;

(i) Refusing to present a government issued photo identification when requested by an electrical inspector while working as an electrician or trainee as required by WAC 296-46B-940(3);

(j) Cheating on an electrical certification examination.

For any act of serious noncompliance, the person, firm, partnership, corporation, or other entity may be referred to the county prosecutor for criminal prosecution under chapter 9A.72 RCW. The department may also file a civil action under chapter 19.28 RCW.

(4) Before a license or certificate is revoked or suspended, the certificate holder will be given written notice of the department's intention to suspend or revoke. Notification will be sent by registered mail to the certificate holder's last known address. The notification will list the allegations against the certificate holder, and provide the certificate holder with the procedures necessary to request a hearing before the electrical board as described in WAC 296-46B-995.

Confiscation - Of an electrical contractor's license, administrator certificate, electrician certificate of competency, or training certificate.

(5) The department may confiscate a license or certificate that is counterfeit, revoked, expired, suspended, or altered. The individual may be referred to the county prosecutor for criminal prosecution under chapter 9A.72 RCW. The department may also file a civil action under chapter 19.28 RCW.

WAC 296-46B-995 Electrical board—Appeal rights and hearings.

General.

(1) Electrical board.

(a) Except as provided in chapters 19.28 and 42.30 RCW, Open Public Meetings Act, and this chapter, all proceedings will be conducted according to chapter 34.05 RCW, Administrative Procedure Act and chapter 10-08 WAC, Model rules of procedure.

(b) See RCW 19.28.311 for the composition of the electrical board.

(c) The board adopts the current edition of the "*Roberts' Rules of Order, Newly Revised*."

(d) The board holds regular meetings on the last Thursday of January, April, July, and October of each year per RCW 19.28.311. Board meetings may be scheduled in a variety of geographic locations in Washington.

(e) All hearings before the board will be held on regularly scheduled meeting dates unless the board determines that an alternate date is necessary.

(f) The chairperson or a majority of the members of the board may call special meetings as provided in RCW 42.30.080.

(g) Each board member will be notified of the agenda, date, time, and place of each regular and special meeting.

(h) The board may elect to have board meetings recorded or transcribed by a court reporter.

(i) A majority of the board constitutes a quorum for purposes of rendering any decision.

(j) Board members may attend meetings in person, via electronic means, or by telephone.

(k) All filings and documents for any matter before the board must be submitted to the chief electrical inspector, as secretary to the board as follows:

By mail: Department of Labor and Industries, P.O. Box 44460, Olympia, WA 98504-4460.

By personal delivery: Department of Labor and Industries, 7273 Linderson Way S.W., Tumwater, WA 98501.

Documents may be submitted by ordinary mail, certified or registered mail, personal delivery, or in an electronic manner acceptable to the department.

(l) Except for original appeal documents and notices of appeal from decisions of either the office of administrative hearings or a city or town, any documents a party wants the board to consider at the hearing must be filed with the chief electrical inspector, as secretary to the board, by the dates specified in the notice of hearing letter. Documents submitted after the deadlines may be excluded at the discretion of the board chair as presiding officer in accordance with WAC 10-08-140 (2)(b).

Appeals

(2) General appeal requirements.

(a) A party may appeal the following matters pursuant to chapter 19.28 RCW to the board: Penalties issued by the department, proposed decisions by the office of administrative hearings, suspension, revocation, or nonrenewals, disputes relating to department interpretation per RCW 19.28.111, 19.28.480, or 19.28.531, appeals of a continuing or basic trainee class or instructor for denials or revocations per WAC 296-46B-970, appeals pertaining to engineer approval or electrical testing laboratory recognition and accreditation, and penalty decisions issued through an appellate process of a city or town.

(b) The appeal must be filed within 20 days after service of the decision and must be made by filing a written notice of appeal with the chief electrical inspector, as secretary to the board. The request for an appeal must be accompanied with a certified check payable to the department. The appeal fee for penalties must be in the sum of 200 dollars or 10 percent of the penalty amount, whichever is less, but in no event less than 100 dollars. A separate appeal fee is required for each violation type with a maximum of 1,000 dollars for all violation types. The appeal fee for all other appeals is 200 dollars unless specified otherwise.

(c) The issues on appeal must be made as precise as possible, in order that the board may proceed promptly to conduct the hearing on relevant and material matter only. Appeals must identify the contentions of the appellant, and if applicable, must specify to which conclusions of law and findings of fact the party takes exception.

(d) The parties to the appeal will be notified of the date, time, and location of the appeal hearing by letter from the chief electrical inspector, as secretary to the board. The notice letter may also include deadlines for filing memorandums of authorities, prehearing conference or other matters necessary for the smooth adjudication of the appeal. Failure to comply with the deadlines outlined in the notice of hearing letter may result in exclusion of the documents. If a party is unable to attend the scheduled hearing due to the geographic location of the meeting, they must immediately notify the chief electrical inspector, as secretary to the board. The appeal may also be rescheduled for good cause shown.

(e) Requests to reschedule a hearing date must be in writing and made at least 30 days prior to the scheduled meeting at which the appeal is to be heard. The chairperson to the board, as the presiding officer, may grant or deny the request based on the needs of the parties.

(f) If either party intends to file a dispositive motion, they must notify the chief electrical inspector, as secretary to the board, no later than 45 days prior to the scheduled hearing. The secretary will consult with the presiding officer to determine a briefing schedule so that the motion can be ruled upon at least 14 days prior to the meeting at which the appeal is scheduled to be heard.

(g) Appeals received at least 60 days before the next regularly scheduled board meeting will be heard at that meeting. When an appeal is received less than 60 days prior to the next regularly scheduled board meeting, the appeal will be scheduled for the following regularly scheduled board meeting.

(h) The board may elect to have the assistance of an administrative law judge in any proceeding.

(3) Appeals of penalties issued by the department.

(a) Appeals will be assigned to the office of administrative hearings who will conduct the hearing pursuant to chapter 34.05 RCW and issue a proposed decision and order.

(b) In all appeals of penalties issued by the department, the department has the burden of proof by a preponderance of the evidence.

(4) Appeals of proposed decisions issued by the office of administrative hearings.

(a) In all appeals of decision issued by the office of administrative hearings, the party aggrieved by the decision has the burden of proof by a preponderance of the evidence.

(b) All appeals of decisions issued by the office of administrative hearings will be based on the record of the hearing and conducted pursuant to chapter 34.05 RCW.

(c) If neither party timely appeals a proposed decision issued by the office of administrative hearings, the proposed decision and order shall become the final order of the board.

(5) Appeals of suspension, revocation, or nonrenewal. An appeal of the suspension or revocation of a license or certificate of competency under RCW 19.28.241 and 19.28.341 or of nonrenewal of a license or certificate of competency under this chapter will be heard by the board in accordance with chapter 34.05 RCW and not assigned to the office of administrative hearings. The board will conduct the hearing and may elect to have the assistance of an administrative law judge in the proceeding.

(6) Appeals of decisions on installation.

(a) A party may seek board review for disputes relating to the interpretation and application of electrical/telecommunications installation or maintenance standards under RCW 19.28.111, 19.28.480, and 19.28.531. The request for review must be filed with the office of the chief electrical inspector, as secretary to the board, within 20 days after the department issues its written interpretation.

(b) Appeals according to this section must specify why the department's interpretation or application of the installation or maintenance standards is in error.

(7) Appeals of a continuing or basic trainee class, course sponsor, or instructor for denials, suspensions, or revocations.

(a) A party may request a review of a decision of denial or modification of an application for a class or instructor issued by the department under WAC 296-46B-970 (3)(e)(iv). The party must submit a written request for review to the chief electrical inspector, as secretary to the board, within 20 days of notification of the denial or modification. The request must include the review fee specified in WAC 296-46B-970 (3)(e)(iv). The review fee is nonrefundable.

(b) A party may appeal a suspension or revocation of a course sponsor or instructor by the department under WAC 296-46B-970 (8)(a). The party must submit a written request for review to the chief electrical inspector, as secretary to the board, within 20 days of notification of the suspension or revocation.

(8) Appeals pertaining to engineer approval or electrical testing laboratory recognition and accreditation.

A party may appeal a decision issued by the department pursuant to WAC 296-46B-997 or 296-46B-999. The appeal will be heard by the board in accordance with chapter 34.05 RCW and not assigned to the office of administrative hearings. The board will conduct the hearing and may elect to have the assistance of an administrative law judge in the proceeding.

(9) Appeals of penalty decisions issued through an appellate process of a city or town.

(a) A party may appeal a decision pursuant to RCW 19.28.010(4) to the board. The appeal must be filed within 20 days after service of the decision issued by a city or town and

must be made by filing a written notice of appeal with the chief electrical inspector, as secretary to the board.

(b) All appeals of decisions issued by a city or town will be based on the record of the hearing at the city or town and conducted pursuant to chapter 34.05 RCW.

(c) The appeal procedures will be the same as those for appeals of proposed decisions issued by the office of administrative hearings.

(d) The city or town will reimburse the department for all costs of an appeal.

(10) Judicial review of final decisions of the board.

(a) A party may seek judicial review of a final order of the board within 30 days after service of the decision. Appeals of final decisions and orders must be made in accordance with chapter 34.05 RCW.

(b) A party may seek judicial review within thirty days of department decisions not specified above in accordance with RCW 34.05.570(4).

Appearance and practice before board.

(11) No party may appear as a representative in proceedings other than the following:

(a) Attorneys at law qualified to practice before the supreme court of the state of Washington;

(b) Attorneys at law qualified to practice before the highest court of record of another state, if the attorneys at law of the state of Washington are permitted to appear as representatives before administrative agencies of the other state, and if not otherwise prohibited by Washington law; or

(c) An owner, officer, partner, or full-time employee of a firm, association, organization, partnership, corporation, or other entity who appears for the firm, association, organization, partnership, corporation or other entity.

(12) All persons appearing in proceedings as a representative must conform to the standards of ethical conduct required of attorneys before the courts of Washington. If a person does not conform to these standards, the board may decline to permit the person to appear as a representative in any proceeding before the board.

WAC 296-46B-997 Engineer approval.

(1) This section describes the methods required to obtain recognition and accreditation of professional engineers registered under chapter 18.43 RCW to approve industrial utilization equipment. This section provides assurance to the general consuming public that electrical products have been tested for safety and identified for their intended use.

(2) Industrial utilization equipment is considered to be safe when it is certified by an engineer accredited by the department.

(a) The department may declare industrial utilization equipment unsafe if:

(i) The equipment is not being manufactured or produced in accordance with all standards of design and construction and all terms and conditions set out in the certification report for the equipment referred to in this chapter;

(ii) The equipment has been shown by field experience to be unduly hazardous to persons or property;

(iii) An examination of the equipment or of the certification report for the equipment shows that the equipment does not comply with all applicable standards; or

(iv) An examination of the certification report or the equipment shows that the equipment cannot be installed in accordance with this chapter.

(b) When the department declares industrial utilization equipment unsafe, the department will notify the product owner and the certifying engineer in writing.

Accreditation - General.

(3) The department's chief electrical inspector's office reviews requests for accreditation. Applicants must submit supporting data to document and verify the requirements of this section have been met.

(4) The accreditation of an engineer will be valid for the period of three years.

(5) On-site inspection of an engineer's facilities.

(a) On-site inspection of the facility(ies) may be required during the initial application process or the renewal process. Representative(s) of the department will evaluate for compliance with accreditation criteria.

(b) The applicant must pay all costs associated with the on-site inspection.

(6) For purposes of chapter 19.28 RCW, all engineers who certify industrial utilization equipment offered for sale in the state of Washington must be accredited by the department.

(7) Fees are payable as required in WAC 296-46B-911.

(8) The engineer must apply for renewal of accreditation at least thirty days prior to the accreditation expiration date. The department will renew accreditation for the period of three years or notify the renewing engineer of the department's reason(s) of refusal following receipt of the completed form and renewal fee.

(9) The department accepts or denies engineer accreditation for engineers seeking to evaluate industrial utilization equipment within the state. Accreditation is determined when an engineer provides evidence to the department that all the requirements of this chapter are met. Accreditation is determined by the department and prior to making a determination, the department may require information and documentation to be provided by the engineer.

(a) Accreditation is subject to review when deemed necessary by the department. The engineer must pay all costs associated with on-site review.

(b) Every accredited engineer must continue to satisfy all the conditions specified in this chapter during the period of the accreditation. An engineer must furnish the department an annual report detailing the extent of its activities for the year. The report must include, but not be limited to:

(i) The number of industrial utilization equipment items approved;

(ii) Organizational structure of the engineer's company;

(iii) Statement of ownership of the engineer's company; and

(iv) Reports of litigation, which in any way were the result of or may affect any accreditation or testing of products covered by this chapter.

(c) The department will notify the applicant of the accreditation results. A letter of accreditation from the department is proof of the accreditation of the engineer.

(10) The engineer will be approved to certify industrial utilization equipment.

Suspension or revocation.

(11) The department may suspend, revoke, or refuse to renew the department's accreditation of any engineer found to be in noncompliance with requirements of this chapter, the laws of the state of Washington, or submitting false information.

(12) The department will serve written notice of intent prior to suspension, revocation, or refusal to renew the accreditation of an engineer.

(13) An engineer, whose accreditation has been suspended, may not reapply for accreditation during the period of such suspension. An engineer, whose accreditation has been revoked, may reapply for accreditation no sooner than two years after the date of revocation of accreditation.

Business structure, practices, and personnel.

(14) The engineer must be an independent, third-party organization with no organizational, managerial, financial, design, or promotional affiliation with owners, manufacturers, suppliers, installers, or vendors of products covered under the engineer's certification or evaluation programs.

The engineer must have an adequate diversity of clients or activity so that the loss or award of a specific contract regarding certification or evaluation would not be a deciding factor in the financial well-being of the engineer.

(15) The engineer must adequately meet the following business practices:

(a) Perform the examinations, tests, evaluations, and inspections required under the certifications programs in accordance with the designated standards and procedures;

(b) Assure that reported values accurately reflect measured and observed data;

(c) Limit work to that for which competence and capacity is available;

(d) Treat test data, records, and reports as proprietary information;

(e) Respond to and attempt to resolve complaints contesting certifications and evaluation results;

(f) Maintain an independent relationship between its clients, affiliates, and other organizations so the engineer's capacity to give certifications and evaluations objectively and without bias is not adversely affected; and

(g) Notify the department within thirty calendar days should it become unable to conform to any of the requirements of this chapter.

(16) Engineers accredited under this chapter must notify the department within thirty calendar days of any of the following:

(a) Change in company name and/or address;

(b) Changes in major test equipment which affect the ability to perform work for which accredited; or

(c) Change in independent status.

(17) The engineer must develop and maintain a certification or evaluation program plan that includes, but is not limited to:

(a) The procedures and authority to ensure the product complies with the standard(s) established by the program;

(b) A quality control system;

(c) Verification and maintenance of facilities and/or equipment; or

(d) Sample selection as applicable for product certifications, and for component testing as necessary for evaluations.

The plan must demonstrate that the engineer has adequate facilities, and equipment to perform all certifications and testing for which it is accredited by the state of Washington. These elements must be contained in the engineer's operations control manual.

(18) The engineer must develop and maintain a quality control system adequate to assure the accuracy and technical integrity of its work as follows:

(a) The engineer's quality control system must include a quality control or engineer's operations control manual;

(b) The quality control or engineer's operations control manual must be adequate to guide a testing technician or inspector in conducting the inspection, evaluation, and/or test in accordance with the test methods and procedures required for the engineer's certification and/or evaluation program(s); and

(c) The engineer must have a current copy of the quality control or engineer operations control manual available for the engineer's use.

(19) The engineer must have training, technical knowledge, and experience adequate to perform the tests, examinations, and evaluations for the certification and/or evaluation activities for which recognition is sought.

(20) The engineer must:

(a) Provide adequate safeguards protecting the engineer's status from the influence or control of manufacturers, vendors, owners, or installers of electrical products certified or tested by the engineer; and

(b) Develop and maintain an adequate training program assuring that the engineer will be able to perform tasks properly and uniformly.

Recordkeeping and reporting - General.

(21) The engineer must develop and maintain records and reports of those testing, inspection, certification, and evaluation activities associated with each piece of industrial utilization equipment. The engineer must retain these records for a minimum of three years.

(22) The engineer must make available to the department, upon request, all records required by the department to verify compliance with this chapter.

(23) See WAC 296-46B-906 for fee information. The engineer's evaluation report must include:

(a) Name and address of the engineer;

(b) Name of client;

(c) Address where the evaluated product is or will be installed;

(d) Designation of standards used to certify or test the product including edition and latest revision (e.g., UL 508, 17th Edition, Jan. 1999, Revision March 15, 2013);

(e) Description of the overall product evaluated to include full nameplate data and equipment type;

(f) A statement as to whether or not the results comply with the requirements of the standard;

(g) Pertinent test evaluation data and identification of tests or inspections including anomalies;

(h) The engineer's stamp; and

(i) Any condition of acceptability or restrictions on use/relocation.

(24) Within ten calendar days after affixing the evaluation mark, the engineer must submit a copy of the evaluation report to their client submitted in any format acceptable to the client and engineer.

WAC 296-46B-999 Electrical testing laboratory requirements.

General.

(1) This section describes the methods required to obtain recognition and accreditation of electrical product(s) certification and/or field evaluation laboratories by the state of Washington. This section provides assurance to the general consuming public that electrical products have been tested for safety and identified for their intended use.

(2) An electrical product is considered to be safe when it is either certified by a laboratory accredited by the department or labeled with a field evaluation mark by a laboratory accredited by the department.

(a) The department may declare electrical equipment unsafe if:

(i) The equipment is not being manufactured or produced in accordance with all standards of design and construction and all terms and conditions set out in the certification report for the equipment referred to in this chapter;

(ii) The equipment has been shown by field experience to be unduly hazardous to persons or property;

(iii) An examination of the equipment or of the certification report for the equipment shows that the equipment does not comply with all applicable standards; or

(iv) An examination of the certification report or the equipment shows that the equipment cannot be installed in accordance with this chapter.

(b) When the department declares an electrical product unsafe, the department will:

(i) Notify the product manufacturer and the appropriate testing laboratory in writing;

(ii) Notify the general public by:

(A) Report to the Consumer Product Safety Commission;

(B) A published article in the *Electrical Currents*;

(C) Internet website posting; and/or

(D) News release.

Accreditation - General.

(3) The department's chief electrical inspector's office reviews requests for accreditation or evaluation. Applicants must submit supporting data to document and verify the requirements of this section have been met.

(4) The accreditation of a NRTL will be valid for the period of the laboratory's current OSHA NRTL accreditation. The accreditation of a non-NRTL will be valid for the period of five years from the date of the department's accreditation.

(5) On-site inspection of a laboratory.

(a) On-site inspection of the laboratory may be required during the initial application process or the renewal process. Technically qualified representative(s) of the department will evaluate for compliance with accreditation criteria.

(b) On-site inspection is not required for NRTL-recognized laboratories requesting approval as certification laboratories using standards for which NRTL recognition has been approved.

(c) The department may waive on-site inspection for:

(i) Laboratories recognized or accredited by another state determined to provide an accreditation program acceptable to the department; or

(ii) NRTL-recognized laboratories requesting approval as certification laboratories for using other standards for which NRTL recognition has not been approved.

(d) The applicant must pay all costs associated with the on-site inspection.

(6) For purposes of chapter 19.28 RCW, all laboratories which certify and/or field evaluate electrical products offered for sale in the state of Washington must be accredited by the department. A NRTL requesting approval as a certification laboratory will be approved for accreditation by the department upon completion of the application process.

(7) Fees are payable as required in WAC 296-46B-911.

(8) The laboratory must apply for renewal of accreditation at least thirty days prior to the accreditation expiration date. The department will renew accreditation for the period specified in subsection (4) of this section or notify the renewing laboratory of the department's reason(s) of refusal following receipt of the completed form and renewal fee. Accreditation may be renewed or refused for one or more electrical product category(ies).

(9) The department accepts or denies laboratory accreditation for all laboratories within the state. Accreditation is determined when a laboratory provides evidence to the department that all the requirements of this chapter are met. Accreditation is determined by the department and prior to making a determination, the department may require information and documentation to be provided by the laboratory.

(a) Accreditation is subject to review when deemed necessary by the department. The laboratory must pay all costs associated with on-site review.

(b) Every accredited laboratory must continue to satisfy all the conditions specified in this chapter during the period of the accreditation. A non-NRTL accredited laboratory must furnish the department an annual report detailing the extent of its activities for the year. The report must include, but not be limited to:

(i) The number of factory inspections;

(ii) Organizational structure of the laboratory;

(iii) Statement of ownership of the laboratory;

(iv) Laboratory equipment verification;

(v) Client accreditation programs;

(vi) Reports of litigation, which in any way were the result of or may affect any accreditation or testing of products covered by this chapter; or

(vii) Assessment of recordkeeping (i.e., certification/evaluation plans, certification/evaluation reports).

(c) The department will notify the applicant of the accreditation results. A letter of accreditation from the department is proof of the accreditation of a laboratory.

(10) The laboratory will be approved to certify only those categories identified and authorized by the department. The department will approve and list electrical product category(ies) the laboratory is qualified to certify or evaluate. The accreditation letter will indicate the electrical product category(ies) for which accreditation is issued.

(11) The department may exclude specific electrical products from acceptance. When required, the laboratory must provide evidence, acceptable to the department, that the laboratory is qualified to certify or field evaluate the specific electrical product. Laboratory recognition as an NRTL for the standard(s) used to certify or field evaluate an electrical product will be acceptable evidence. The standards used for certification or field evaluation must be determined by the department to be acceptable and applicable to the electrical product being certified or field evaluated.

If a laboratory chooses to add additional standards prior to its expiration date, it must submit a Request Approval for Additional Standards form to the chief electrical inspector.

Suspension or revocation.

(12) Any laboratory failing to comply with the requirements of this chapter or submitting false information may have accreditation revoked or suspended for one or more electrical product category(ies).

(13) The department may suspend, revoke, or refuse to renew the accreditation of any laboratory found to be in noncompliance with this chapter or the laws of the state of Washington.

(14) The department will serve written notice of intent prior to suspension, revocation, or refusal to renew the accreditation of a laboratory.

(15) The laboratory must immediately notify all manufacturers whose products are covered by the accreditation that such products manufactured subsequent to the departmental revocation and offered for sale in the state of Washington can no longer bear the laboratory's label that identified it as a certified product in the state of Washington. A laboratory, whose accreditation has been suspended, may not reapply for accreditation during the period of such suspension. A laboratory, whose accreditation has been revoked, may reapply for accreditation no sooner than one year after the date of revocation of accreditation.

Business structure, practices, and personnel.

(16) The laboratory must be an independent, third-party organization with no organizational, managerial, financial, design, or promotional affiliation with manufacturers, suppliers, installers, or vendors of products covered under its certification or evaluation programs.

The laboratory must have an adequate diversity of clients or activity so that the loss or award of a specific contract regarding certification or evaluation would not be a deciding factor in the financial well-being of the laboratory.

(17) The laboratory must adequately meet the following business practices:

(a) Perform the examinations, tests, evaluations, and inspections required under the certifications programs in accordance with the designated standards and procedures;

(b) Assure that reported values accurately reflect measured and observed data;

(c) Limit work to that for which competence and capacity is available;

(d) Treat test data, records, and reports as proprietary information;

(e) Respond and attempt to resolve complaints contesting certifications and evaluation results;

(f) Maintain an independent relationship between its clients, affiliates, and other organizations so the laboratory's capacity to give certifications and evaluations objectively and without bias is not adversely affected; and

(g) Notify the department within thirty calendar days should it become unable to conform to any of the requirements of this chapter.

(18) Laboratories accredited under this chapter must notify the department within thirty calendar days of any of the following:

(a) Change in company name and/or address;

(b) Changes in major test equipment which affect the ability to perform work for which accredited;

(c) Changes in principal officers, key supervisory and responsible personnel in the company including the director of testing and engineering services, director of follow-up services, and the laboratory supervisor; or

(d) Change in independent status.

(19) The laboratory must develop and maintain a certification or evaluation program plan that includes, but is not limited to:

(a) The procedures and authority to ensure the product complies with the standard(s) established by the program;

(b) A quality control system;

(c) Adequate personnel to perform the certification or evaluation;

(d) Verification and maintenance of facilities and/or equipment; or

(e) Sample selection as applicable for product certifications, and for component testing as necessary for field evaluations.

The plan must demonstrate that the laboratory has adequate personnel, facilities, and equipment to perform all certifications and testing for which it is accredited by the state of Washington. These elements must be contained in the laboratory operations control manual.

(20) The laboratory must develop and maintain a quality control system adequate to assure the accuracy and technical integrity of its work as follows:

(a) The laboratory's quality control system must include a quality control or laboratory operations control manual;

(b) The quality control or laboratory operations control manual must be adequate to guide a testing technician or inspector in conducting the inspection, evaluation, and/or test in accordance with the test methods and procedures required for the laboratory's certification and/or evaluation program(s); and

(c) The laboratory must have a current copy of its quality control or laboratory operations control manual available in the laboratory for use by laboratory personnel.

(21) Competent personnel who must have training, technical knowledge, and experience adequate to perform the tests, examinations, and evaluations for the certification and/or evaluation activities for which recognition is sought must staff the laboratory.

(22) The laboratory must:

(a) Provide adequate safeguards protecting the employment status of personnel from the influence or control of manufacturers, vendors, or installers of electrical products certified or tested by the laboratory;

(b) Develop and maintain a job description for each technical position category;

(c) Ensure the competency of its staff to perform assigned tasks through individual yearly observation and/or examination by a person(s) qualified by the person who has technical responsibility for the laboratory;

(d) Develop and maintain records of the results and dates of the observation or examination of personnel performance;

(e) Maintain information on the training, technical knowledge, and experience of personnel; and

(f) Develop and maintain an adequate training program assuring that new or untrained personnel will be able to perform assigned tasks properly and uniformly.

Recordkeeping and reporting - General.

(23) The laboratory must develop and maintain records and reports of those testing, inspection, certification, and evaluation activities associated with each program for which accreditation is sought. The laboratory must retain these records for a minimum of three years.

(24) The laboratory must make available to the department, upon request, all records required by the department to verify compliance with this chapter.

Recordkeeping and reporting - Certification.

(25) Certification reports must contain, as applicable:

(a) Name and address of the laboratory;

(b) Pertinent data and identification of tests or inspections;

(c) Name of client;

(d) Appropriate product title;

(e) Designation of standards used to certify or test the product including edition and latest revision (e.g., UL 508, 17th Edition, Jan. 1999, Revision March 15, 2013);

(f) Description and identification of the sample including, as necessary, where and how the sample was selected;

(g) Identification of the test, inspection, or procedure as specified for certification or evaluation by the standard;

(h) Known deviations, additions to, or exclusions from evaluation and certification activities in order to be appropriate for new or innovative products not contemplated by the standard;

(i) Measurements, examinations, derived results, and identification of test anomalies;

(j) A statement as to whether or not the results comply with the requirements of the standard;

(k) Name, contact information, and signature of person(s) having responsibility for the report;

(l) Raw data, calculations, tables, graphs, sketches, and/or photographs generated during certification or evaluation must be maintained if not included in the report;

(m) Control forms documenting the receipt, handling, storage, shipping, and testing of samples;

(n) Laboratory records of its quality control checks and audits for monitoring its test work associated with its certification programs, including:

(i) Records of products assurance (follow-up) test results; and

(ii) Records of detected errors and discrepancies and actions taken subsequent to such detection.

(o) Record of written complaints and disposition thereof; and

(p) A statement that records required by these criteria will be maintained for a minimum of three years after cessation of the certification or evaluation.

Recordkeeping and reporting - Field evaluation.

(26) The evaluation report must include:

(a) Name and address of the laboratory;

(b) Name of client;

(c) Address where the evaluated product is or will be installed;

(d) Designation of standards used to certify or test the product including edition and latest revision (e.g., UL 508, 17th Edition, Jan. 1999, Revision March 15, 2013);

(e) Description and identification of the nonlisted and nonlabeled component(s) requiring evaluation by applicable standard(s);

(f) Description of the overall product evaluated to include full nameplate data and equipment type;

(g) A statement as to whether or not the results comply with the requirements of the standard;

(h) Pertinent test evaluation data and identification of tests or inspections including anomalies;

(i) Signature of person(s) having responsibility for the report;

(j) Any condition of acceptability or restrictions on use/relocation;

(k) Serial number(s) of the field evaluation label(s) applied must be included with the equipment identification; and

(l) Date the equipment label was affixed.

(27) Within thirty calendar days after affixing the evaluation mark, the laboratory must submit a copy of the evaluation report to their client submitted in any format acceptable to the client and testing laboratory.

Facilities and equipment.

(28) The laboratory must provide adequate evidence of the calibration, verification, and maintenance of the facilities and equipment specified for each certification or evaluation.

(29) Verification and maintenance of facilities and equipment must include as applicable, but not be limited to:

(a) Equipment description;

(b) Name of manufacturer;

(c) Model, style, serial number, or other identification;

(d) Equipment variables subject to calibration and verification;

(e) Statement of the equipment's allowable error and tolerances of readings;

(f) Calibration or verification procedure and schedule;

(g) Dates and results of last calibrations or verifications;

(h) Specified maintenance practices;

(i) Calibration and/or verification of equipment used;

(j) Name and contact information of personnel or outside contractor providing the calibration or verification service; and

(k) Traceability to National Institute of Standards and Technology or other equivalent standard reference authority.

Standards.

(30) The laboratory must have copies available, for laboratory personnel use, of applicable standards and other documents referred to or used in performing each certification or test for which approval is sought.

(31) If a laboratory desires to use a standard other than an ANSI standard, the department will evaluate the proposed standard to determine that it provides an adequate level of safety. The National Electrical Code, NFPA 70, will not be allowed to be the primary standard used to evaluate a product.

Product certification.

(32) The electrical product certification program must contain test procedure(s), standard(s) used, certification agreement(s), method(s) of identification of products, follow-up inspection, and other laboratory procedures and authority necessary to ensure that the product complies with the standards (requirements) established by the program.

(33) All components of certified or tested products must be labeled or evaluated for compliance with all standards and conditions of use applicable to such components.

(34) The laboratory must publish an *Annual Product Directory* identifying products that are authorized to bear the laboratory's certification mark. The products directory must briefly describe the program, the products covered, the name of the manufacturer or vendor of the certified products, and the identification of the published standards or the compiled requirements on which the program is based. The product directory must be available to the public. Supplemental up-to-date information must be available to the public at the office of the laboratory during normal business hours.

Certification laboratory/manufacturer - Agreement.

(35) Measures to provide for manufacturer compliance with the provisions of the product standard and laboratory control of the use of the certification mark must be embodied in an agreement between the manufacturer and the certification laboratory. The certification agreement must:

(a) Require the manufacturer to provide information and assistance as needed by the laboratory to conduct the necessary product conformity and production assurance evaluation;

(b) Allow the laboratory's representative(s) access to the manufacturer's facilities during working hours for inspection and may allow audit activities without prior notice;

(c) Restrict the manufacturer's application of certification marks to products that comply with requirements of the product standard;

(d) Secure the manufacturer's agreement to the publication of notice by the certification laboratory for any product already available in the marketplace that does not meet the safety standard;

(e) Require reevaluation of products whenever the standard covering the product is revised;

(f) Require the laboratory to notify the manufacturer's personnel responsible for and authorized to institute product recall in the case of a hazard;

(g) Provide for control of certification marks by the laboratory;

(h) Require that the laboratory provide the manufacturer with a report of original product evaluation. The report must document conformity with applicable product standards by test results and other data; and

(i) Require the identification of the manufacturer(s) of the product and the location(s) where the product is produced.

Certification mark.

(36) The laboratory owns the certification mark.

(37) The certification mark must be registered as a certification mark with the United States Patent and Trademark Office.

(38) The certification mark must:

(a) Not be readily transferable from one product to another;

(b) Be directly applied to each unit of production in the form of labels or markings suitable for the environment and use of the product. When the physical size of the unit does not permit individual marking, markings may be attached to the smallest package in which the unit is marketed;

(c) Include the name or other appropriate identification of the certification laboratory;

(d) Include the product category; and

(e) The laboratory must have a system of controls and records for all marks. The records must include marks removed or otherwise voided. See WAC 296-46B-999(25).

(39) The certification mark may be applied to the product prior to authorizing the use of a certification mark on a product. The laboratory must:

(a) Determine by examination and/or tests that representative samples of the product comply with the requirements (standards). Components of certified products must comply with the applicable safety requirements (standards) or be listed. Evaluation of the product design must be made on representative production samples or on prototype product samples with subsequent verification that factory productions are the same as the prototype;

(b) Determine that the manufacturer has the necessary facilities, test equipment, and control procedures to ensure that continuing production of the product complies with the requirements; and

(c) If the certification mark is not applied at the manufacturing facility, the laboratory must provide prior notification to the department of its intent to affix the certification mark in the field.

Certification laboratory product - Assurance/follow up.

(40) To verify continued product acceptability, the laboratory must develop and maintain a factory follow-up inspection program and manual to determine continued compliance of certified products with the applicable standard.

(41) The follow-up inspection file must include the:

(a) Conditions governing the use of the certification mark on products;

(b) Identification of the products authorized for certification;

(c) Identification of manufacturer and plant location at which manufacture and certification are authorized;

(d) Description, specifications, and requirements applicable to the product;

(e) Description of processes needed for control purposes;

(f) Description of the manufacturer's quality assurance program when used as part of the follow-up program;

(g) Description of inspections and tests to be conducted by the manufacturer and the laboratory; and

(h) Description of follow-up tests to be conducted in the laboratory.

(42) Follow-up procedures and activities must include:

(a) Periodic inspections at the factory with testing at the factory or certification laboratory of representative samples selected from production and, if appropriate, from the market;

(b) Periodic auditing or surveillance of the manufacturer's quality assurance program through the witnessing of manufacturer's tests, review of the manufacturer's records, and verification of the manufacturer's produced data;

(c) Investigation of alleged field failures upon department request; and

(d) Procedures for control of the use of the certification mark by:

(i) Keeping records of the release and use of certification marks;

(ii) Removal of marks from noncomplying products;

(iii) Return or destruction of unused marks when the authority to use the marks is terminated; and

(iv) Legal action.

(43) The frequency of laboratory follow-up inspections must not be less than four times per year during production, unless adequate data is provided to the department to justify less frequent inspections. If there is no production during the year, at least one follow-up inspection is to be completed. The frequency of follow-up inspections must be sufficient to provide a reasonable check on the method(s) the manufacturer exercises to assure that the product bearing the certification mark complies with the applicable standards.

Field evaluation - Requirements.

(44) The field evaluation laboratory may perform evaluations on any products or product categories previously approved by the department. NRTL recognition may be accepted by the department as a basis for approval to perform field evaluations. Since OSHA does not review or recognize laboratories for field evaluation purposes, laboratories seeking accreditation from the department for field evaluation may be required to provide additional justification of capability such as, but not limited to: Recordkeeping, employee standards and proficiency, equipment requirements, and other requirements described in this chapter.

(45) The scope of a field evaluation will depend on the status of the item to be evaluated as follows:

(a) A new piece of equipment must have a complete evaluation of all components and the assembly as provided by the manufacturer. For example: An industrial machine with a control panel, remote motors, sensors, controls, and other utilization equipment; and

(b) A product that has been modified internally or by an addition need have only those portions evaluated that were affected by the modification. For example: A switchboard with multiple sections that has a section added would only need the new section, the one section immediately adjacent, and any control modifications evaluated.

(46) Each unit that receives a field evaluation mark applied by the field evaluation laboratory must have sufficient inspections and/or testing completed to ensure it is in essential conformance with the applicable product standard(s).

(47) The laboratory may perform the preliminary evaluation in the manufacturer's facility. Final evaluation and acceptance of the product must be made on-site at the location of final installation, unless waived by the department.

Field evaluation mark.

(48) Only laboratory personnel may apply the field evaluation mark after final acceptance of the product. The field evaluation label must be applied on-site at the location of the final installation, unless waived by the department.

(49) The field evaluation laboratory must have a system of controls and records for all field evaluation marks it applies. The records must include labels removed or otherwise voided.

(50) A field evaluated product may be relocated or fed from a different power source if not prohibited by the field evaluation mark or the field evaluation report.

(51) The field evaluation mark must:

(a) Not be readily transferable from one product to another;

(b) Be directly applied by the laboratory personnel to each unit of production in the form of labels or markings suitable for the environment and use of the product;

(c) Include the name or other appropriate identification of the certification laboratory;

(d) Include a unique evaluation laboratory reference number; and

(e) Include a reference to the evaluation report or other notation if there are any limitations of use noted within the report.

(52) The field evaluation laboratory must have a system of controls and records for all field evaluation marks it applies. The records must include labels removed or otherwise voided. See subsection (26) of this section.

Department of Labor and Industries
Electrical Section
PO Box 44460
Olympia WA 98504-4460