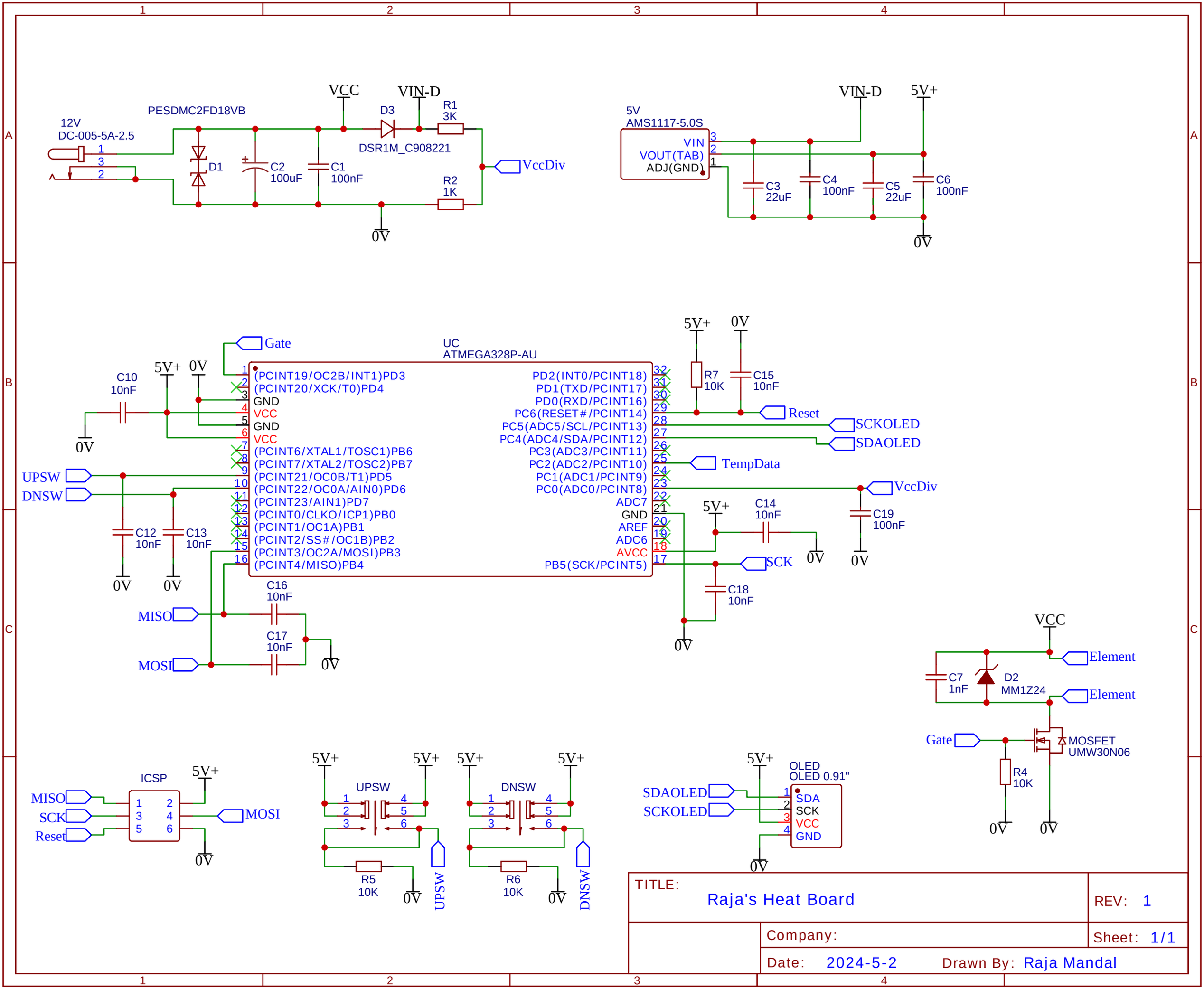

TITLE: Raja's Heat Board

REV: 1

Company:

Sheet: 1/1

Date: 2024-5-2

Drawn By: Raja Mandal