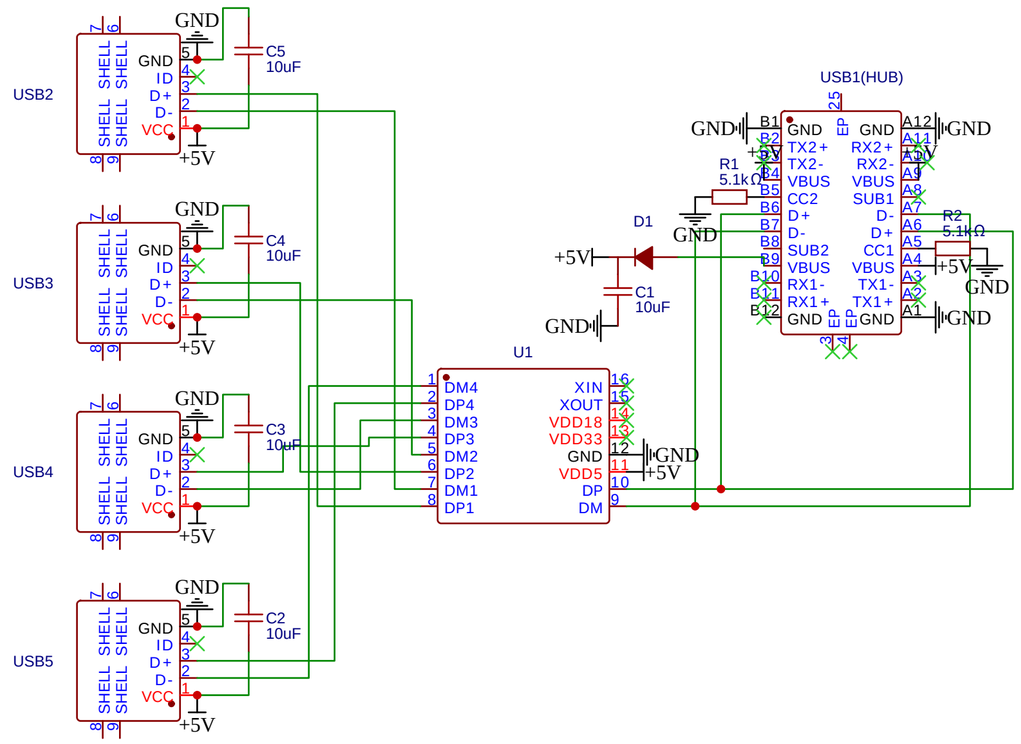

TITLE: Schematics		REV: 1.0
EasyEDA	Company:	Sheet: 1/1
	Date: 2024-04-20 Drawn By: arashsaifi0	