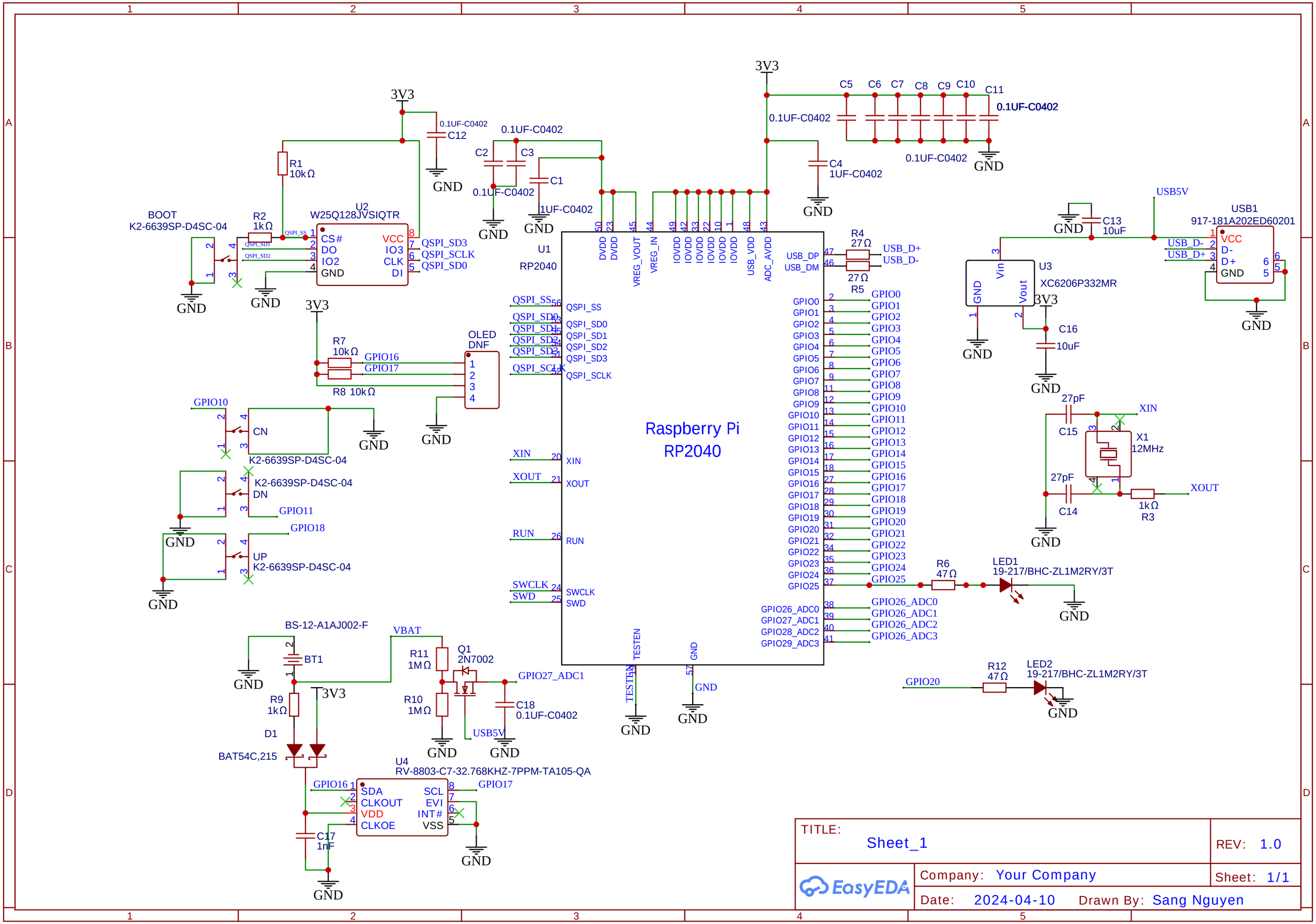
Raspberry Pi
RP2040
U1
RP2040
U2
W25Q128JVSIQTR
CS#
DO
IO2
GND
VCC
IO3
CLK
DI
QSPI_SD3
QSPI_SCLK
QSPI_SD0
QSPI_SS
QSPI_SD1
QSPI_SD2
BOOT
K2-6639SP-D4SC-04
R1
10kΩ
R2
1kΩ
R7
10kΩ
R8 10kΩ
GPIO16
GPIO17
OLED
DNF
GPIO10
CN
K2-6639SP-D4SC-04
DN
GPIO11
GPIO18
UP
3V3
GND
C12
0.1UF-C0402
C1
1UF-C0402
C2
C3
C4
1UF-C0402
C5
C6
C7
C8
C9
C10
C11
0.1UF-C0402
DVDD
VREG_VOUT
VREG_IN
IOVDD
USB_VDD
ADC_AVDD
USB_DP
USB_DM
R4
27Ω
R5
27Ω
USB_D+
USB_D-
XIN
XOUT
RUN
SWCLK
SWD
TESTEN
BS-12-A1AJ002-F
BT1
VBAT
R9
1kΩ
D1
BAT54C,215
R11
1MΩ
R10
1MΩ
Q1
2N7002
GPIO27_ADC1
C18
0.1UF-C0402
USB5V
U4
RV-8803-C7-32.768KHZ-7PPM-TA105-QA
SDA
CLKOUT
VDD
CLKOE
SCL
EVI
INT#
VSS
C17
1nF
U3
XC6206P332MR
Vin
Vout
C13
10uF
C16
10uF
USB1
917-181A202ED60201
VCC
D-
D+
GND
USB_D-
USB_D+
C15
27pF
C14
27pF
X1
12MHz
R3
1kΩ
R6
47Ω
LED1
19-217/BHC-ZL1M2RY/3T
GPIO20
R12
47Ω
LED2
19-217/BHC-ZL1M2RY/3T
GPIO26_ADC0
GPIO27_ADC1
GPIO28_ADC2
GPIO29_ADC3
GPIO26_ADC1
GPIO26_ADC2
GPIO26_ADC3
TITLE:
Sheet_1
REV: 1.0
Company: Your Company
Sheet: 1/1
Date: 2024-04-10
Drawn By: Sang Nguyen
EasyEDA