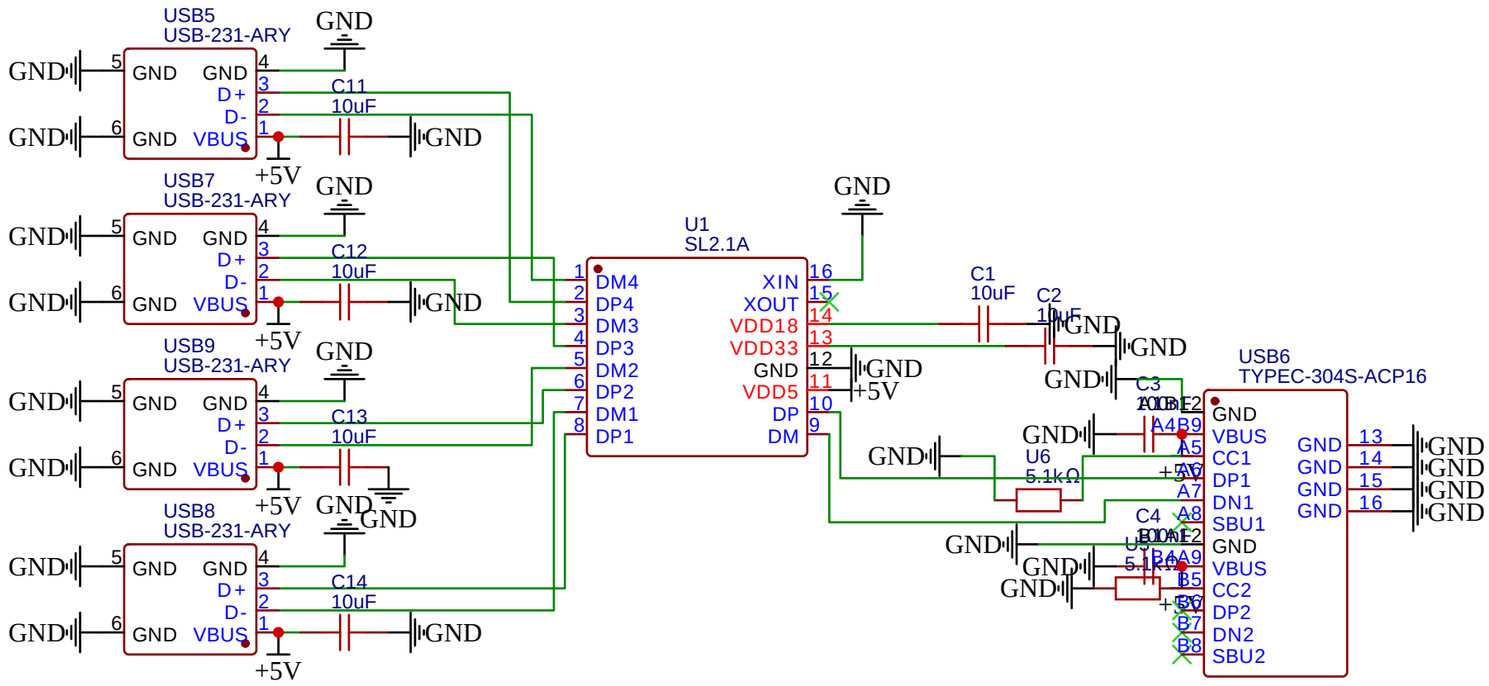

TITLE: USB-C to 4 USB-A Hub	REV: 1.0
EasyEDA Company: Blaze Coding	Sheet: 1/1
Date: 2024-04-18 Drawn By:	