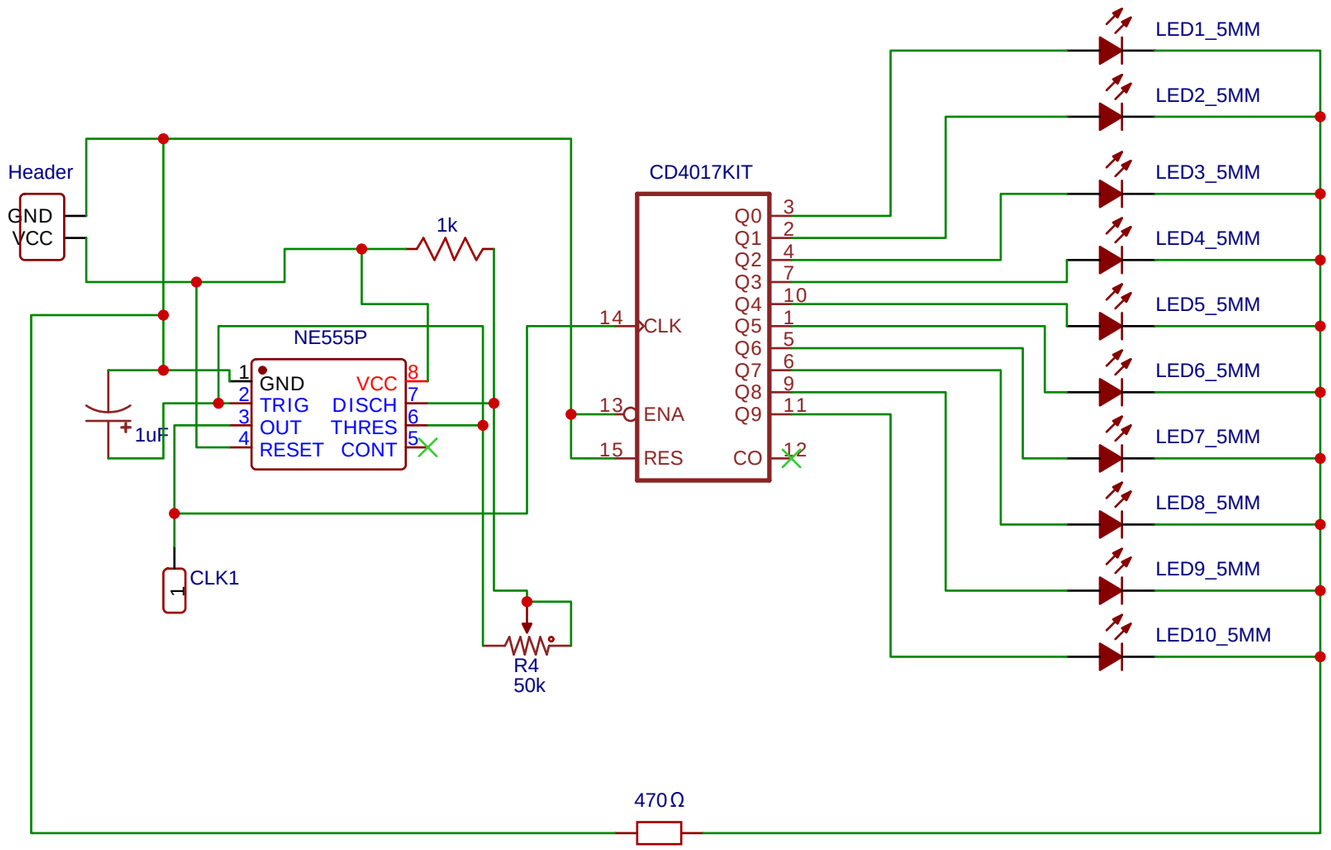

TITLE: Sheet_1	REV: 1.0
EasyEDA Company: Your Company	Sheet: 1/1
Date: 2024-04-23 Drawn By: winterycart	