battery connection and current sensing

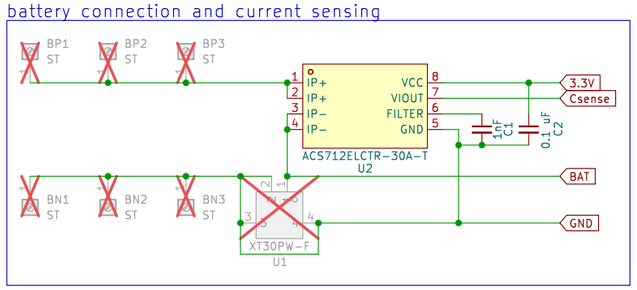

charging switch

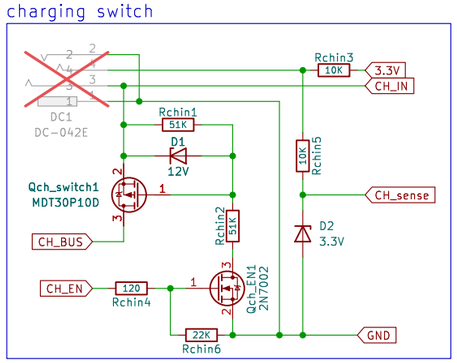

module connectors

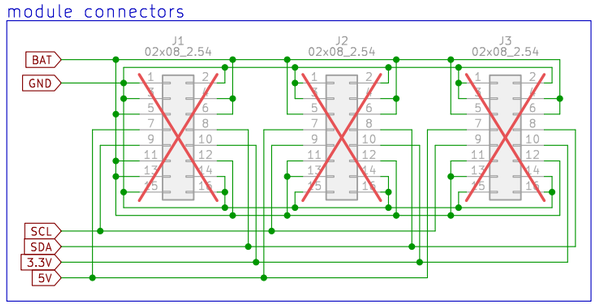

usb c connector

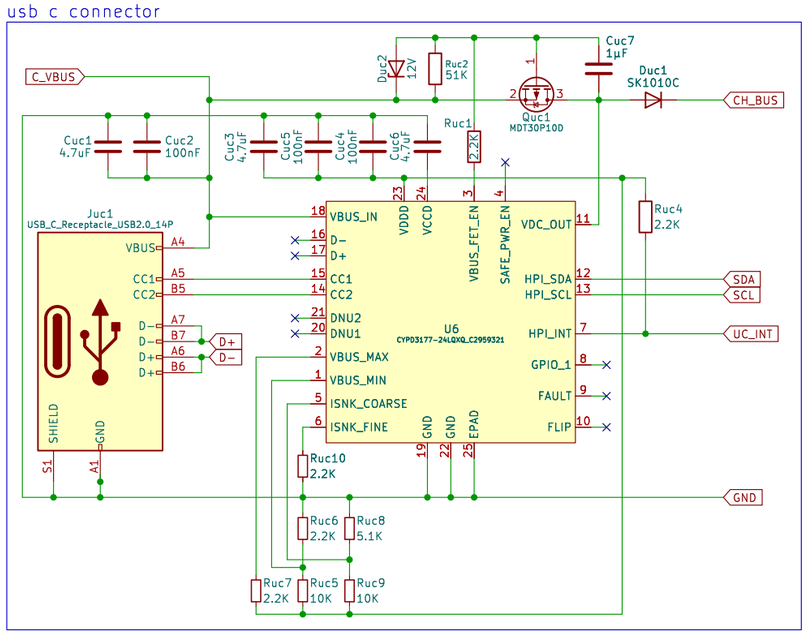

3.3V linear regulator

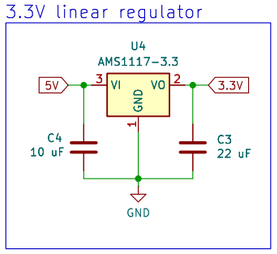

5V converter

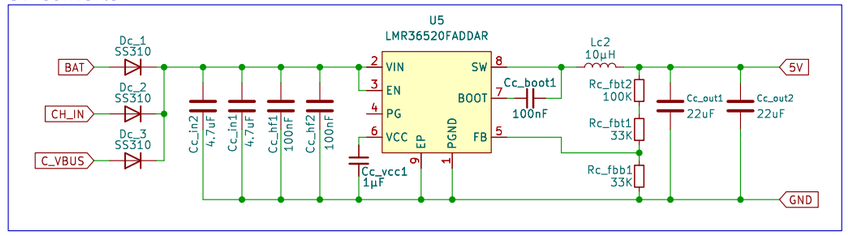

BATTERY CHARGER

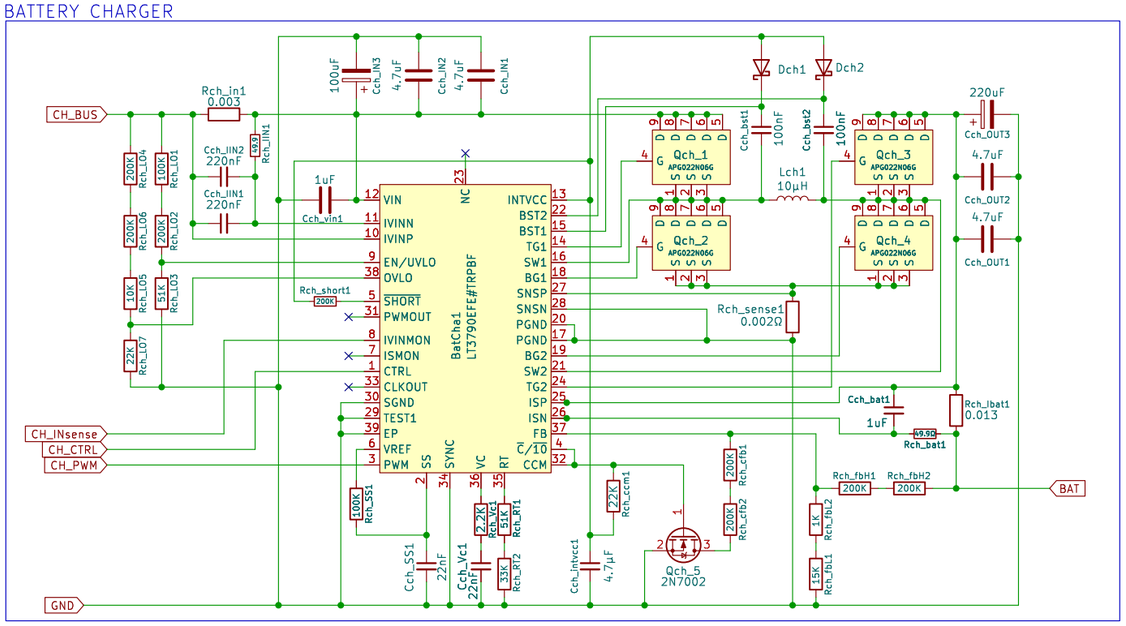

charging voltage

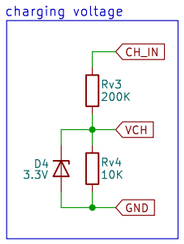

battery voltage

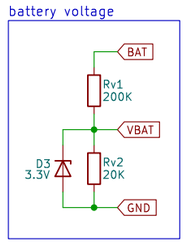

µC esp32 c3

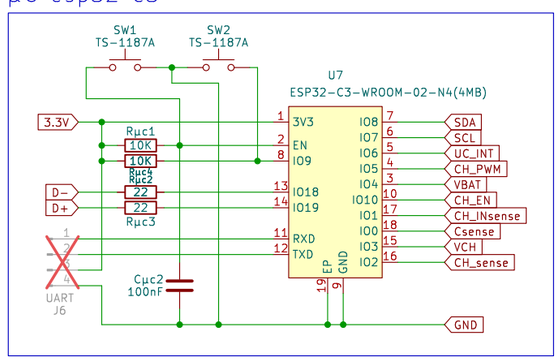

DAC

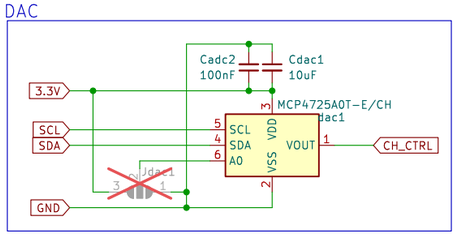

PULLUP

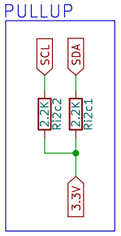

Sheet: /
File: battery−bus.kicad_sch

Title:

Size: A3	Date:	Rev:
KiCad E.D.A. 8.0.2		Id: 1/1