Power

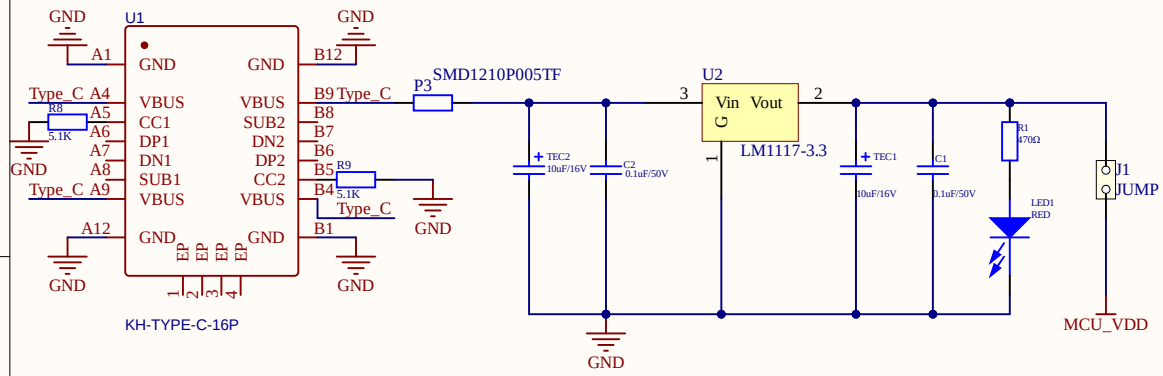

Extension Pin

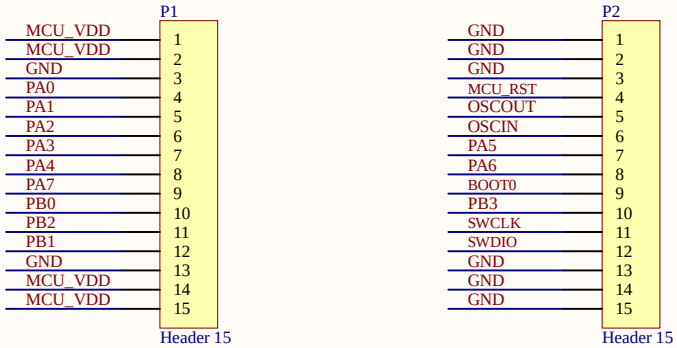

Key

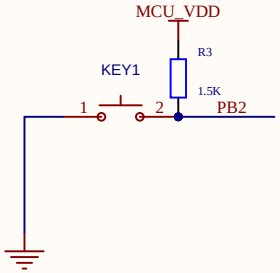

Mcu

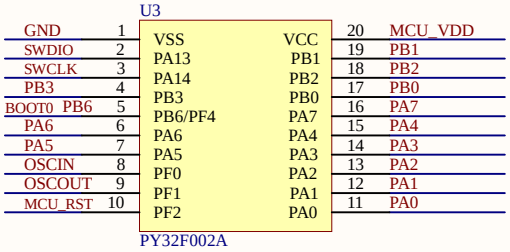

LED

Boot

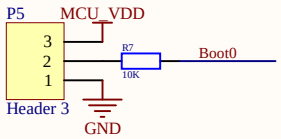

Reset

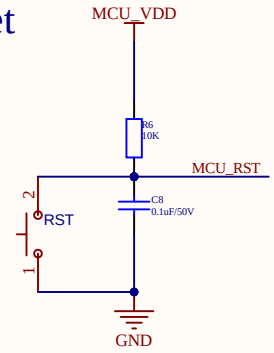

Debug

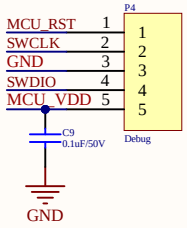

OSC

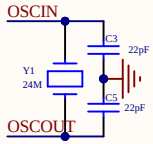

Title		
Size: A4	Number	Revision
Date: 11/11/2022	Sheet of	
File: F:\ME\..\PY32F002A_StartKit_V1.0.SchDoc	Drawn By:	

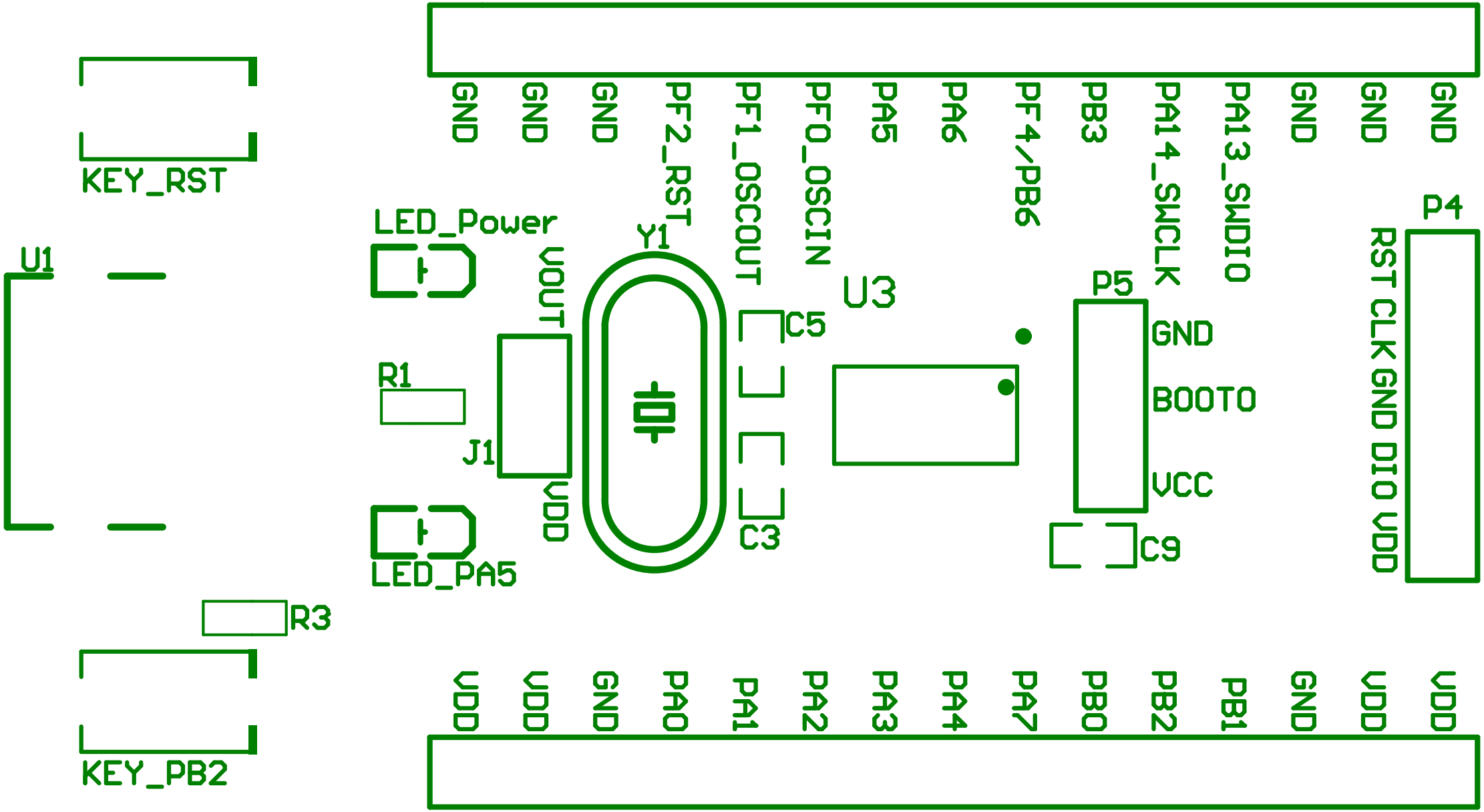

KEY_RST
U1
LED_Power
R1
J1
VOUT
VDD
LED_PA5
Y1
C5
C3
U3
P5
GND
BOOT0
VCC
C9
P4
RST CLK GND DIO VDD
GND
GND
GND
PF2_RST
PF1_OSCOUT
PF0_OSCIN
PA5
PA6
PF4/PB6
PB3
PA14_SWCLK
PA13_SWDIO
GND
GND
GND
R3
KEY_PB2
VDD
VDD
GND
PA0
PA1
PA2
PA3
PA4
PA7
PB0
PB2
PB1
GND
VDD
VDD

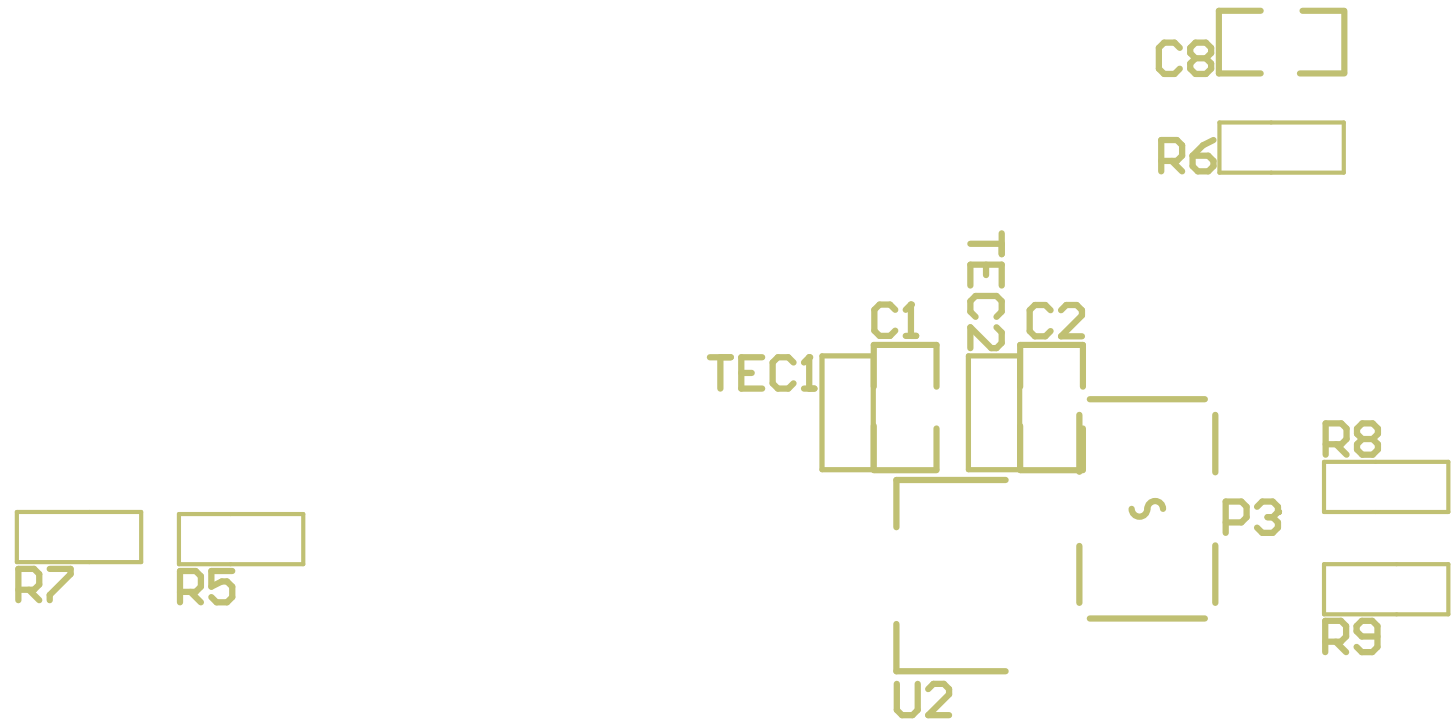
C8
R6
TEC2
C1
C2
TEC1
P3
R8
R7
R5
R9
U2

Comment	Description	Designator	Footprint	LibRef	Quantity
0.1uF/50V	Capacitor	C1, C2, C8, C9	0603C	Cap	4
22pF	Capacitor	C3, C5	0603C	Cap	2
JUMP		J1	HDR1X2	JUMP	1
1TS002B-2600-5001		KEY1, RST	SW	1TS002B-2600-5001	2
RED		LED1	0603_LED	PDI-E803_Dup1	1
GREEN		LED2	0603_LED	PDI-E803_Dup1	1
Header 15	Header, 15-Pin	P1, P2	HDR1X15	Header 15	2
SMD1210P005TF		P3	SDM1210P005TF	SMD1210P005TF	1
Debug		P4	HDR1X5	CON5	1
Header 3	Header, 3-Pin	P5	HDR1X3	Header 3	1
470Ω	Resistor	R1	0603R	Res	1
1.5K	Resistor	R3	0603R	Res	1
680Ω	Resistor	R5	0603R	Res	1
10K	Resistor	R6, R7	0603R	Res	2
5.1K	Resistor	R8, R9	0603R	Res_1	2
10uF		TEC1, TEC2	0603	贴片钽电容	2
KH-TYPE-C-16P		U1	USB-C-SMD_KH-TYPE-C-16P	KH-TYPE-C-16P	1
LM1117-3.3		U2	LM1117-3.3	LM1117-3.3	1
PY32F002A		U3	TSSOP20	PY32F002A	1
24M	Crystal	Y1	25MHZ_2	CRYSTAL	1