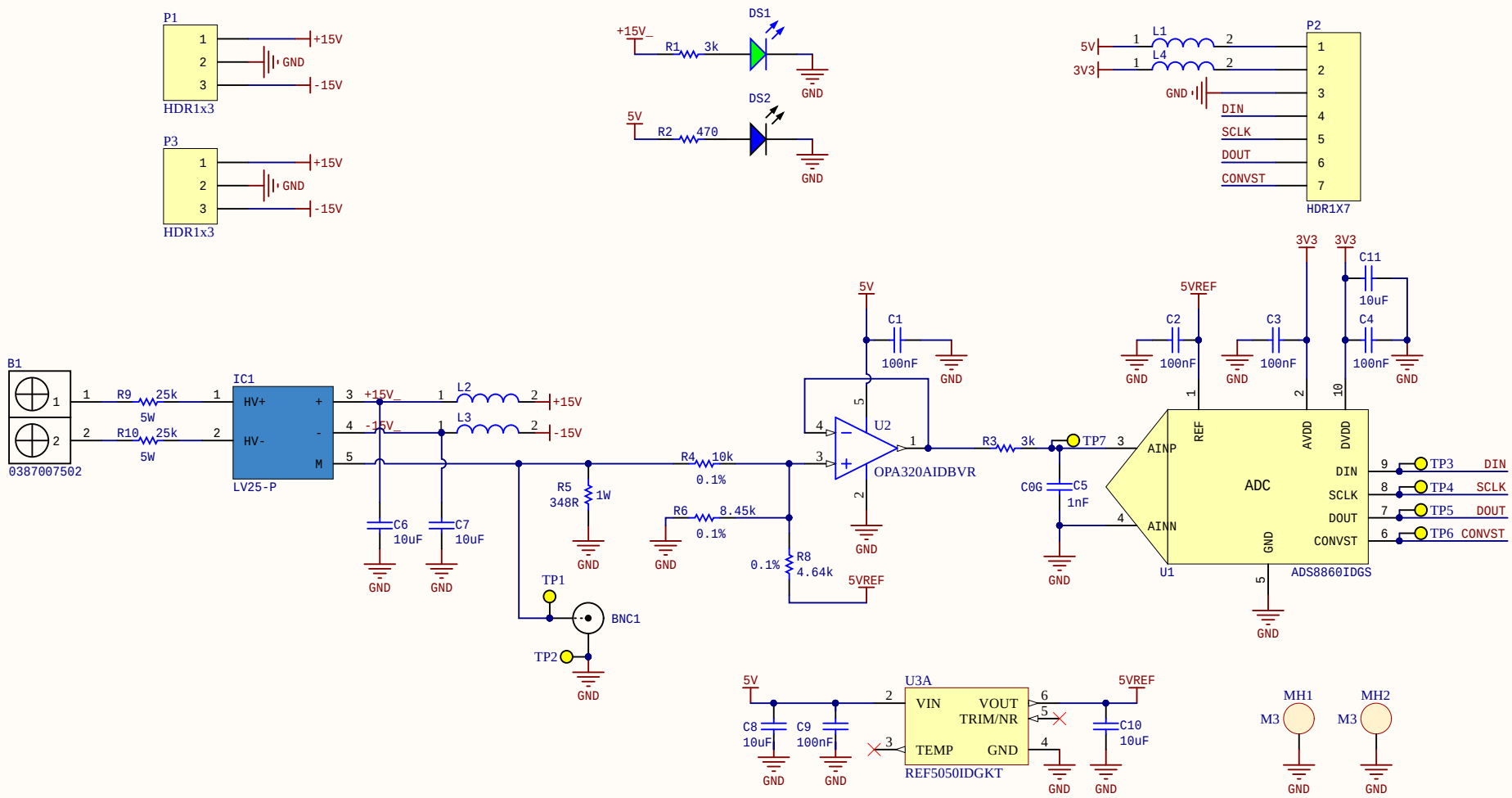

Title: ***SensorCard - Current Sensors***			***Severson Group*** *WEMPEC* *UW-Madison*
File: VoltageSensorBoard.SchDoc		Sheet: 1 of 4	
Revision: A	Time: 1:42:29 PM	Date: 8/24/2019	Engineer: Jason Sylvestre

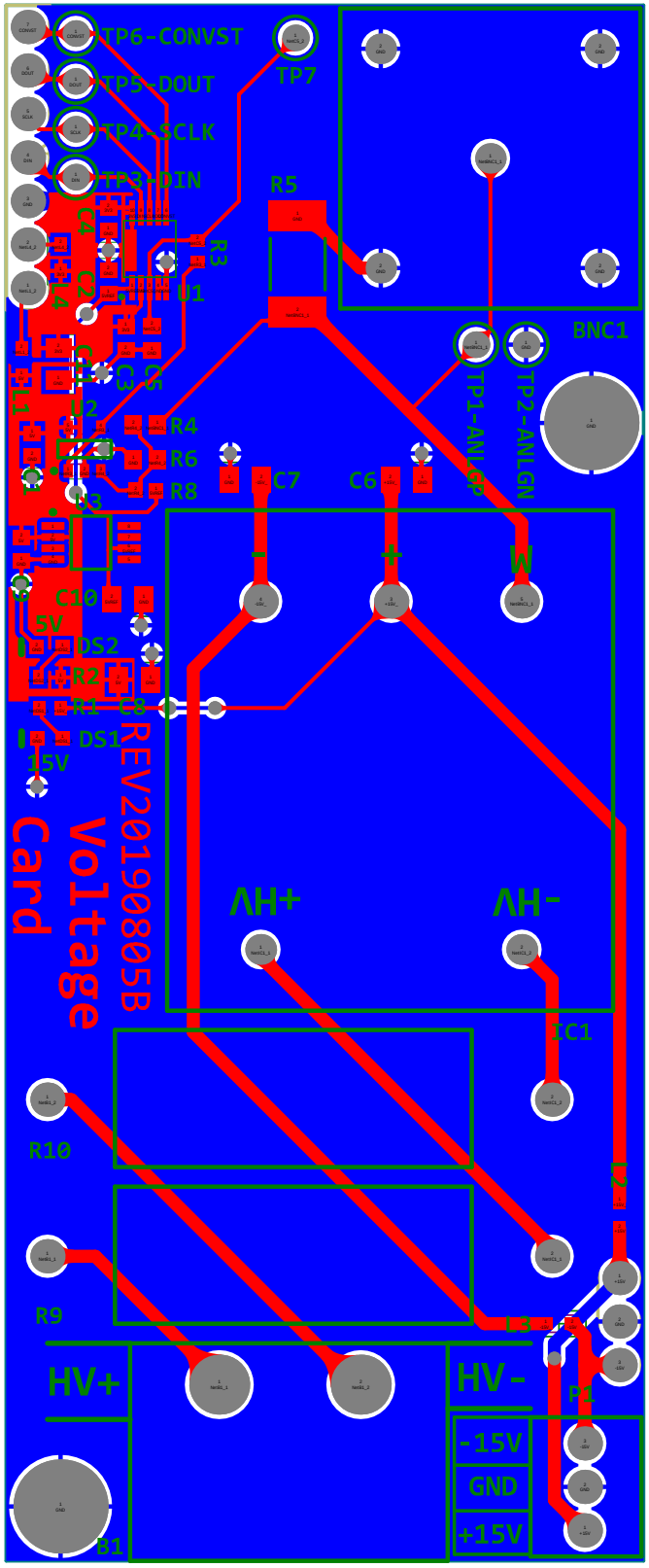
TP6-CONVST
TP5-DOUT
TP4-SCLK
TP3-DIN
TP7
R5
R3
U1
C4
C2
C1
C3
C5
R4
R6
R8
C7
C6
BNC1
TP1-ANLGP
TP2-ANLGN
C10
5V
DS2
R2
R1
C8
DS1
15V
REV20190805B
Voltage
Card
AH+
AH-
IC1
R10
R9
HV+
HV-
-15V
GND
+15V
P2
B1