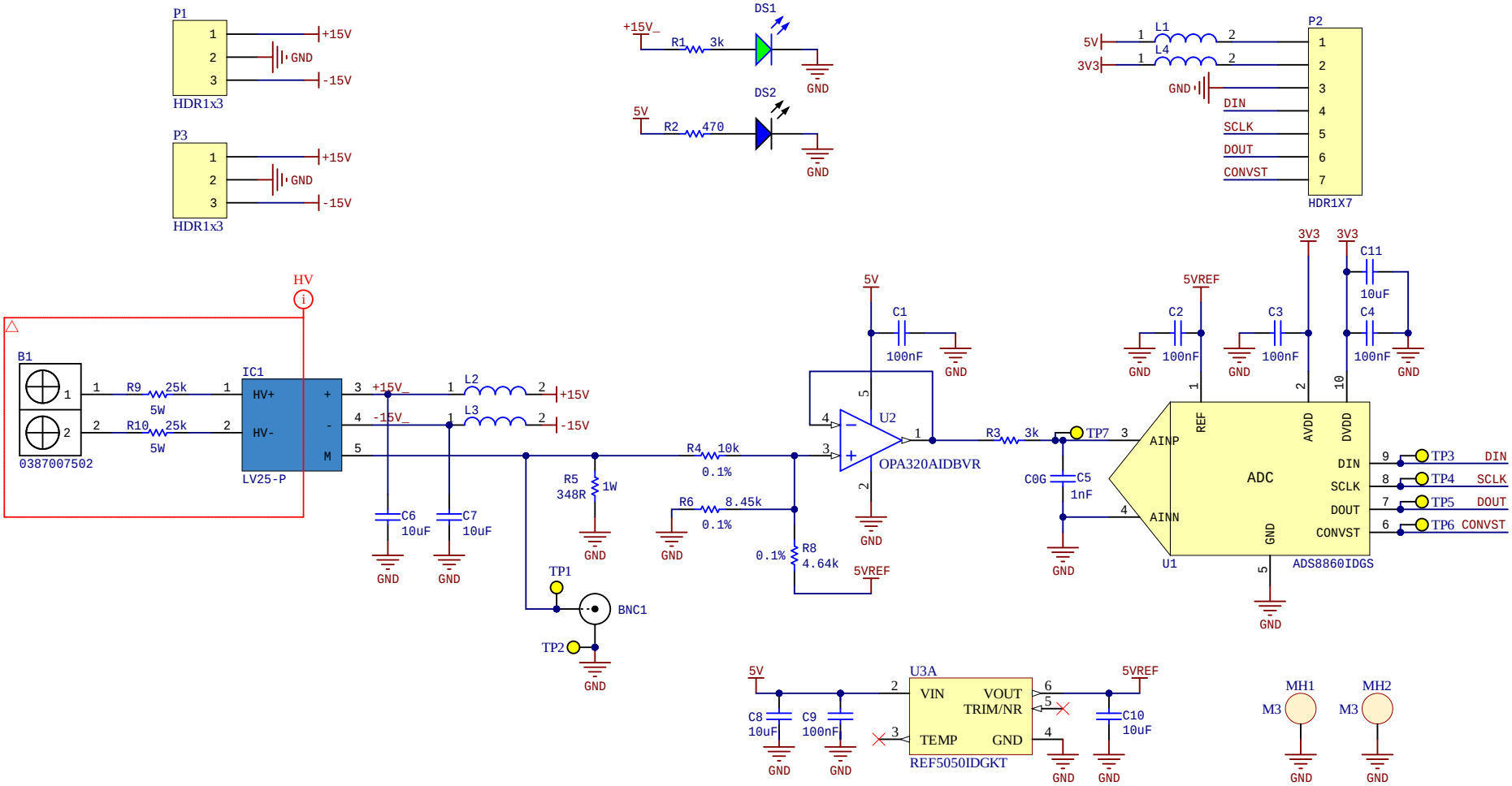

Title: ***SensorCard - Voltage Sensors***			***Severson Group*** *WEMPEC* *UW-Madison*
File: VoltageSensorBoard.SchDoc		Sheet: 1 of 1	
Revision: C	Time: 10:11:12 PM	Date: 9/22/2020	Engineer: Jason Sylvestre