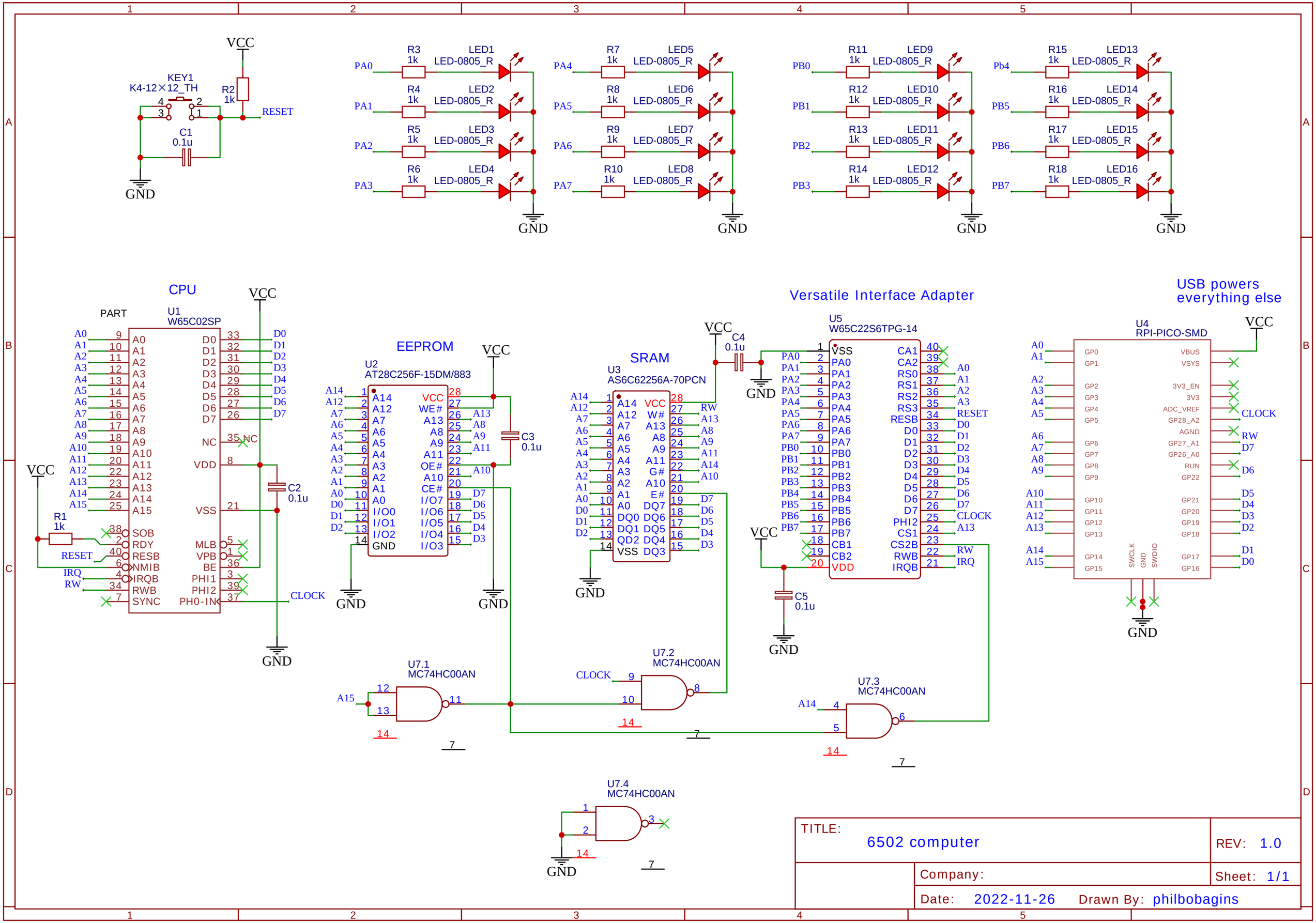
VCC
KEY1
K4-12×12_TH
R2
1k
RESET
C1
0.1u
GND
R3 1k LED1 LED-0805_R PA0
R4 1k LED2 LED-0805_R PA1
R5 1k LED3 LED-0805_R PA2
R6 1k LED4 LED-0805_R PA3
R7 1k LED5 LED-0805_R PA4
R8 1k LED6 LED-0805_R PA5
R9 1k LED7 LED-0805_R PA6
R10 1k LED8 LED-0805_R PA7
R11 1k LED9 LED-0805_R PB0
R12 1k LED10 LED-0805_R PB1
R13 1k LED11 LED-0805_R PB2
R14 1k LED12 LED-0805_R PB3
R15 1k LED13 LED-0805_R Pb4
R16 1k LED14 LED-0805_R PB5
R17 1k LED15 LED-0805_R PB6
R18 1k LED16 LED-0805_R PB7
CPU
PART
U1
W65C02SP
R1
1k
C2
0.1u
CLOCK
EEPROM
U2
AT28C256F-15DM/883
C3
0.1u
SRAM
U3
AS6C62256A-70PCN
C4
0.1u
Versatile Interface Adapter
U5
W65C22S6TPG-14
C5
0.1u
USB powers
everything else
U4
RPI-PICO-SMD
U7.1
MC74HC00AN
U7.2
MC74HC00AN
U7.3
MC74HC00AN
U7.4
MC74HC00AN
TITLE:
6502 computer
REV: 1.0
Company:
Sheet: 1/1
Date: 2022-11-26
Drawn By: philbobagins