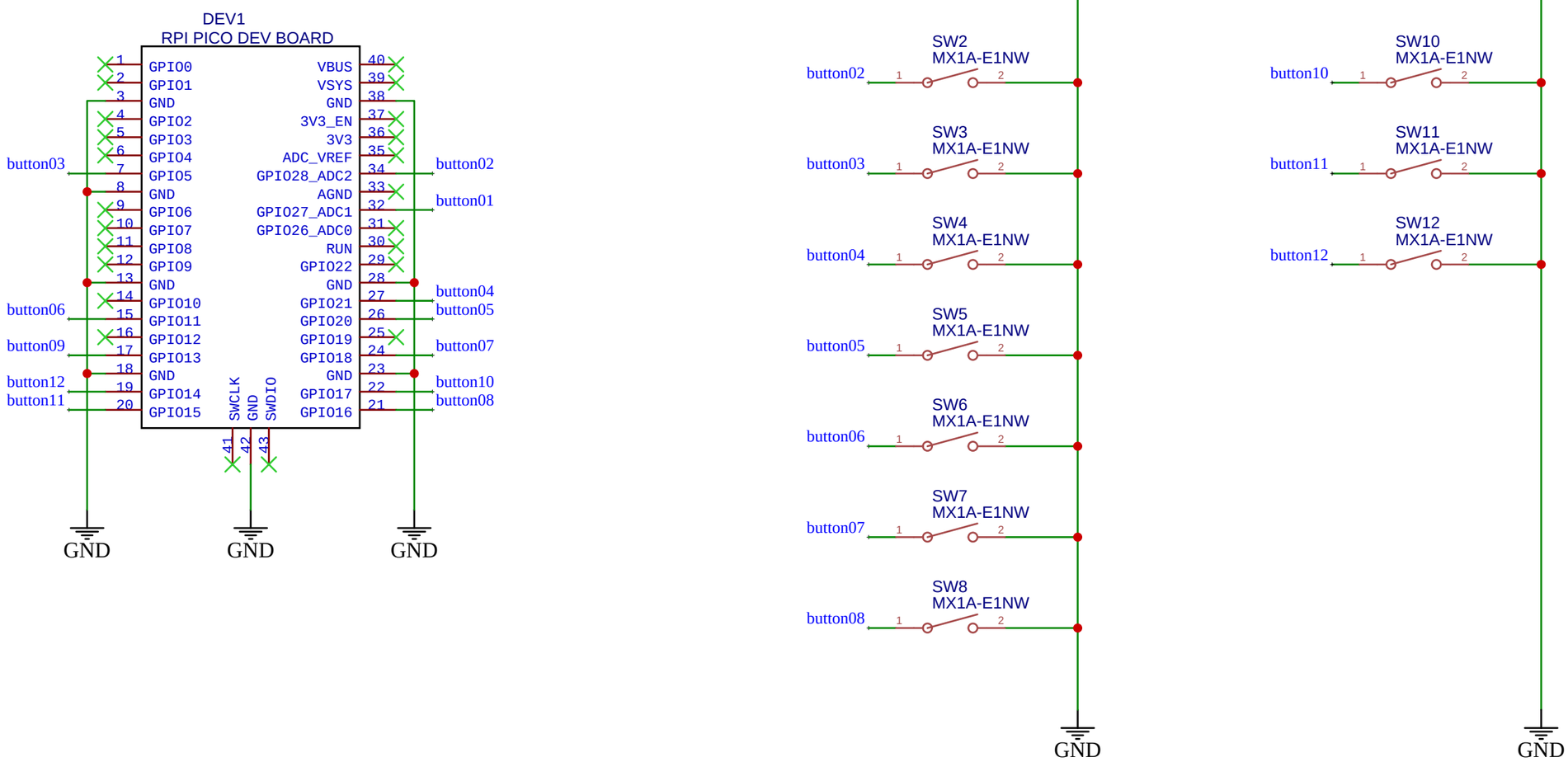

TITLE: Pico Keys		REV: 1.0
	Company:	Sheet: 1/1
	Date: 2022-06-14 Drawn By: philbobagins	