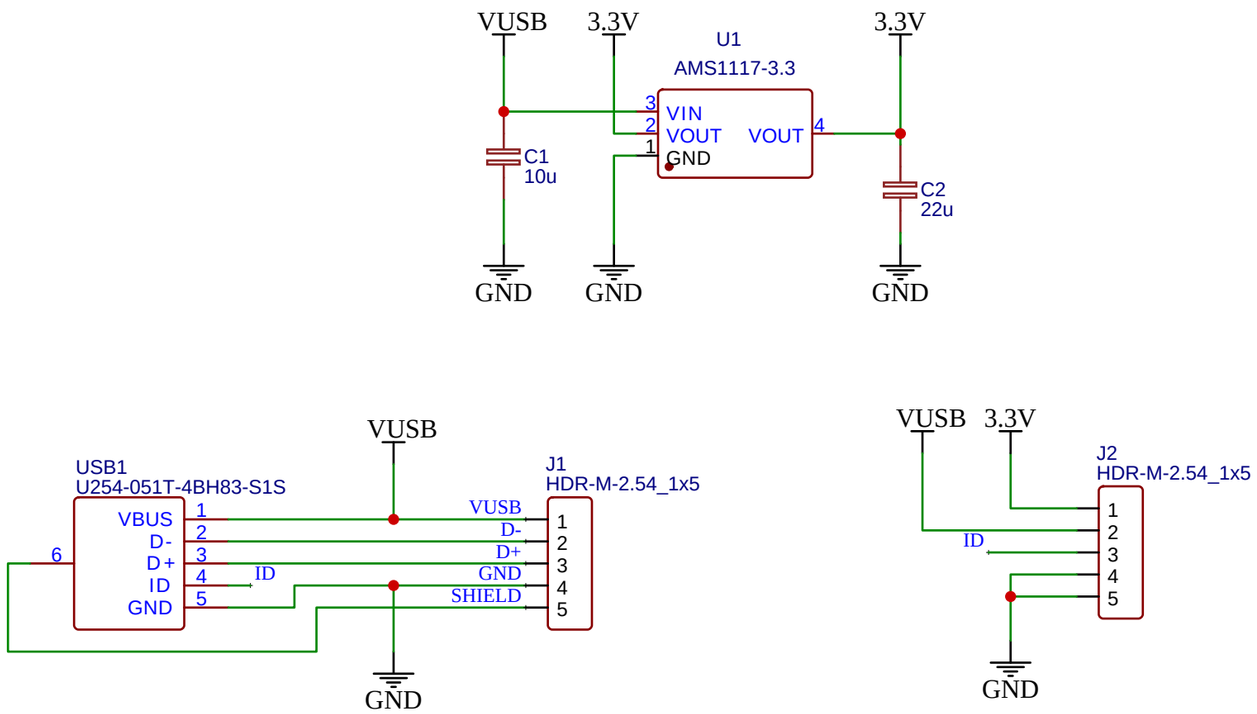

TITLE: USB micro B RA breakout		REV: 1.0
	Company:	Sheet: 1/1
	Date: 2023-02-02 Drawn By: philbobagins	