DCG Student Assignment

Philip Waldron 31-08-1996

Examination Number: 132986

Version of SolidWorks used:
SolidWorks 2009 SP2.1

Common Features

- Contrasting or vibrant colours are used to attract the attention and interest of consumers.

- Either a simple or intricate design is used to appeal to the target demographic.

- Often different materials such as rubber is used as a grip to make a bottle easier to handle.

- In addition, water bottles may sport one or multiple grooves to make it easier and more comfortable to hold

- Most bottles include a screw-on cap for easy accessibility and filling.

[1, 2, 3, 4 & 5]

Reusable water bottles are designed to provide hydration when participating in a range of daily activities. Their ergonomic design has resulted in a range of sleek, lightweight, compact, colourful, environmentally friendly and easy-to-use products.

-DCG Higher Level Student Assignment 2014

An Introduction To Reusable Water Bottles

There are countless water bottles designed to be used while participating in virtually any sport or outdoor activity today. Many sport a variety of unique features to accommodate a target audience or activity. Features may range from different materials used, grips, filtration systems, mounts, shapes and compartments, exit ports and etc. These features aim to improve the ergonomics of the bottle for their intended use.

As well as the ergonomics of the bottle, another important aspect involves the aesthetic design of the bottle. Many reusable water bottles are designed in a way to catch the attention of consumers, whether that includes bright or contrasting colours, intricate designs or interesting shapes.

Design Research and Exploration of Brief

[6]

Mounting Devices and Carabiner Clips

Most external mounting devices for water bottles are designed to cater towards cyclists, as they are widely used for cycling. They usually feature a screw on mount that is attached to the metal frame of the bicycle making it versatile and adjustable to one's personal preference.

Mounting devices aren't one for all products. They can't be used while participating in other activities such as hiking or jogging. In that case, the popular alternative are carabiner clips. These usually have one end that wraps around the bottle or bottle neck or clasps onto an attachment hole, while at the other end it can snap onto many things such as backpacks or belts.

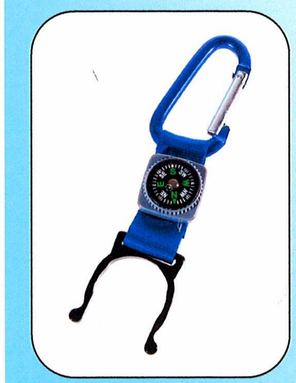

[7, 8, 9, & 10]

Materials

Reusable water bottles come in virtually any material imaginable, varying from plastics, fabrics, metallics and etc. The materials used depends much on the intended use of the container. For example a thermic container for storing hot liquids may be made out of aluminium, while an ordinary sports bottle may be made from polyethylene (plastic) or less commonly glass, as this serves to be economically and environmentally friendly. These bottles are often accompanied by a rubberised grip to make them easier to handle.

Fabrics may also be used with containers as a jacket to keep the contents warm, or used in the actual production of the containers such as hydration carriers. Fabric is considered ideal as it is lightweight, durable and easily carried.

Shape and Form

Much like the materials used to produce reusable water bottles, they come in many shapes and forms. The container's shape and form is considered very important when outlining the design intent, as it's shape usually revolves around the intended use of the bottle.

Most bottles feature a cylindrical shape as this form is universally recognised and is easily adaptable this way. The shape and form begin to differ when design intent is considered such as increased stability and grip, gimmicks or secondary features (i.e. storage capabilities).

Design Variations

There is a wide variety of reusable water bottles to choose from on the market today. They come in a range of colours, shapes and sizes, and while most aim just to hydrate, nowadays some also provide other secondary functions. Examples where a secondary function is featured includes the Autoseal Kangaroo Water Bottle where it houses a small compartment to store belongings, which may considered useful when participating in jogging, swimming etc. Some water bottles are designed to fit specific mounts, while others are designed to be easily stored, carried or held. A good example of a design orientated towards an easy-carry concept is the Track Sports Bottle. It's ergonomic design makes it easy to hold while on the go with comfortably placed finger grooves. Apart from the functional design variations, some bottles also sport an aesthetically pleasing logo. One prime example of this is the Lucozade Sport Water Bottle. This bottle depicts a large sleek logo covering almost the entire front side of the bottle, largely promoting the Lucozade company and the sports branch of the company. This goes hand in hand with many sport and fitness campaigns they have developed such as the 'Club Crusade', drastically increasing the popularity of the Lucozade brand itself and their sports water bottles. Ideas and developments such as these continue to revolutionise the water bottle industry today.

Lucozade Sport Water Bottle

[4]

- 1 litre capacity
- Multiple finger grooves
- Pull spout
- Air tight twistable cap
- Durable plastic

HydraDuo Water Bottle

[11]

- 300 milliliters per container (600 ml overall capacity)
- Easy assembly/disassembly
- Two chambers with an anti-leak dual lid design
- Attachment hole
- Clear BPA free plastic

Foldable Sports Bottle

[12]

- 600 milliliter capacity
- Flip cap
- One circular grooved grip
- Concertina design
- Stretchable/Compactible plastic

ThermoBak AB

[13]

- 3 litre capacity
- Bite valve
- Rapid removal backpack design
- Air tight twistable cap
- Resistant, durable nylon

Autoseal Kangaroo Water Bottle

[14]

- 710 milliliter capacity
- Leak proof flip spout
- Built in compartment
- Flip handle
- Clear BPA free plastic

Track Sports Bottle

[15]

- 500 milliliter capacity
- Pull Spout
- Multiple finger grooves
- Easy-carry design
- Recyclable polyethylene (plastic)

Compare and Contrast

HydraDuo

[11]

Main Design Features

The HydraDuo water bottle's main design feature is the dual chamber design. While the bottle may not have the best ergonomic design for outdoor sports or activities, as it's missing any finger grooves, grips or most other convenient design features, it aims to be very aesthetically pleasing with light contrasting colours and a sleek design. The primary selling point is that it may contain two different liquids, being promoted for gym activities, walking or just for leisure of virtually any consumer. The HydraDuo is also made viable for physical activities through the attachment hole on the cap, as it may be attached to a belt or bag and taken on the go, providing a decent amount of hydration.

- Two chambers each with a capacity of 300 milliliters totaling a 600 milliliter capacity ideally used for two different liquids.
- Dual anti-leak lids to seal the individual contents of each chamber. A rubber stopper ring provides the anti-leak functionality.
- An attachment hole is placed on the cap of the bottle for attaching it to a bag, belt etc. using a carabiner clip or string.
- A clear design allows for the contents of each chamber to be easily viewed.
- Simple assembly and disassembly to washed in a dishwasher as BPA free plastic is used, making it dishwasher safe.

ThermoBak AB

[13]

Main Design Features

The CamelBak AB hydration carrier aims to accomodate long strenuous activities as it holds an extremely large quantity of liquid. It's backpack design features strategically placed clips providing an affective fast removal mechanism, ideally used for military activity, though also very popular in cycling, running, hiking, camping and many other activities. The CamelBak AB also sports a bite valve for easy delivery of water, making it very efficient while on the go as it may be used without much effort. The aesthetics of the backpack are also very pleasing, aiming to accommodate military activity due to the digital camo design, though also pleasing for collectors and ordinary consumers. This particular model does not come in other colours, but other models may come in many other colours and designs. Alongside these features, the primary selling point is the adaptability of the hydration pack, being ideal for many situations.

- 3 litre capacity pocket with a wide air-tight fillport for quick and easy filling.
- Quick link exit port for easy removal and attachment of the flow tube.
- Anti-leak bite valve for efficient water delivery with a shut off system.
- Adaptable rapid removal backpack design for quick removal of the backpack, worn as an ordinary hydration carrier or attached to a vehicle.
- The hydration carrier is not machine washable, as the integrity of the fabric and fasteners may be damaged. The bag is soaked lightly in soap water to clean.

The cap features an exit port for each inner chamber, accessed by a dual lid design, and can be easily twisted off.

The cap is made from tough polyethylene plastic.

A rubber seal is placed on top of the two semi-circular chambers to create a tight seal preventing leakage and the transference of liquid between the chambers.

HydraDuo

Capacity:
300ml x2

Size:
Height: 220mm
Width: 90mm
Depth: 110mm

[16 & 17]

Two chambers based off a semi-circular shape both fitting in the outer bottle.

The chambers are coloured light grey and light orange respectively, made from a translucent hard plastic.

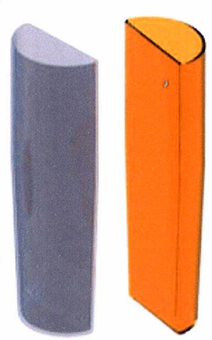

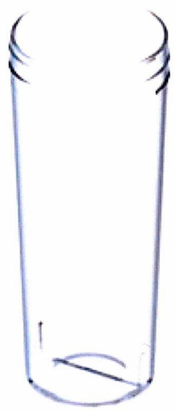

The outer bottle contains the two inner chambers is based off a circular shape. It has a wider opening over a smaller base, creating a sleek converge-esque design.

The Bottle is a completely transparent, hard plastic.

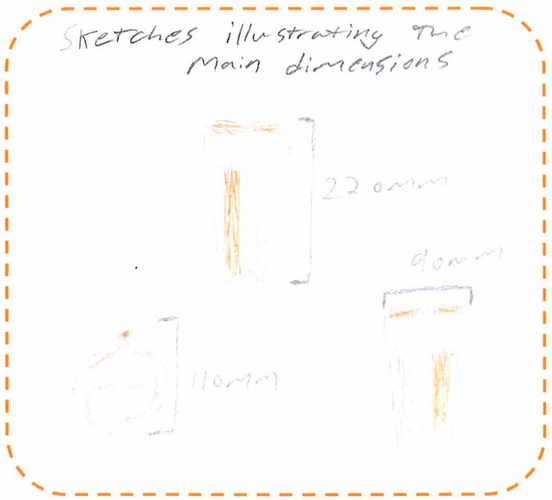

[13]

The Bite Valve consists of an anti-leak mechanism, with a latch to be attached close to the user's mouth.

The bite valve is connected to the reservoir through a rubber tube.

The cap leading to the reservoir is a twist cap for easy removal and features a large diameter for easy filling.

The cap is made from a sturdy plastic while the latch holding the cap is rubberised.

ThermoBak AB

Size:
Height: 420 mm
Width: 280 mm
Depth: 90 mm

Capacity:
3000ml

[13]

Strategically placed buckles on the straps support rapid removal capabilities.

The straps are made of a durable high denier nylon.

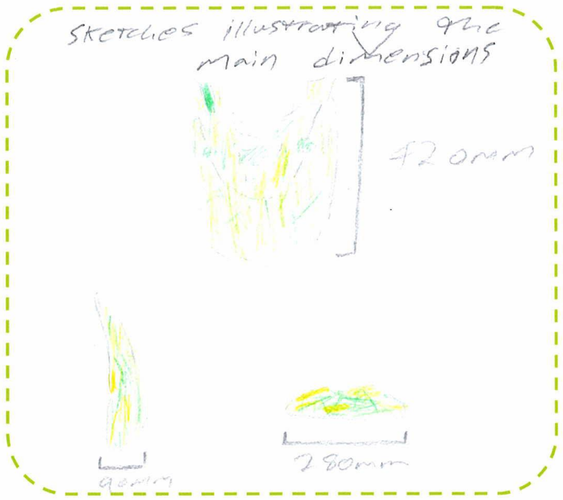

The bag outer bag houses the reservoir, and is made from a good quality lightweight nylon.

The fabric has a military digital camo design.

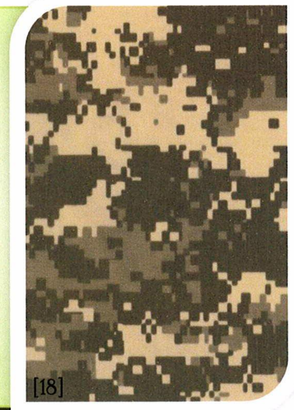

[18]

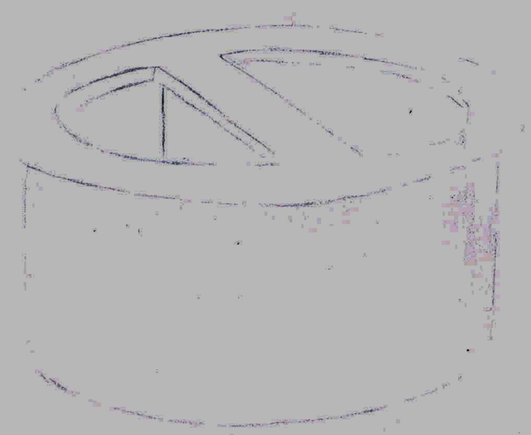

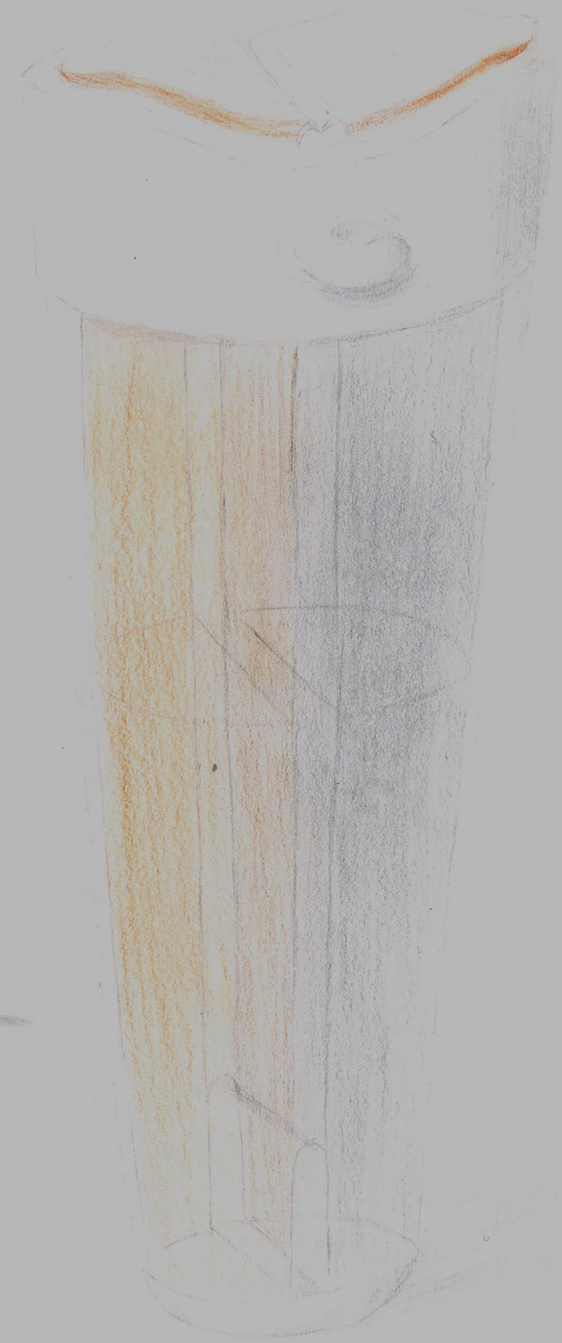

Output 3 Examination Number: 132986

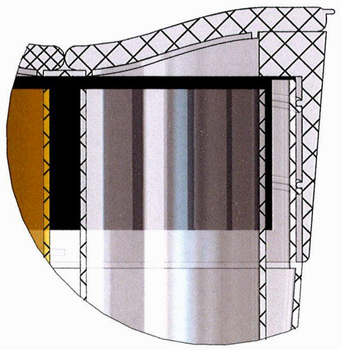

DETAIL B
SCALE 1 : 1

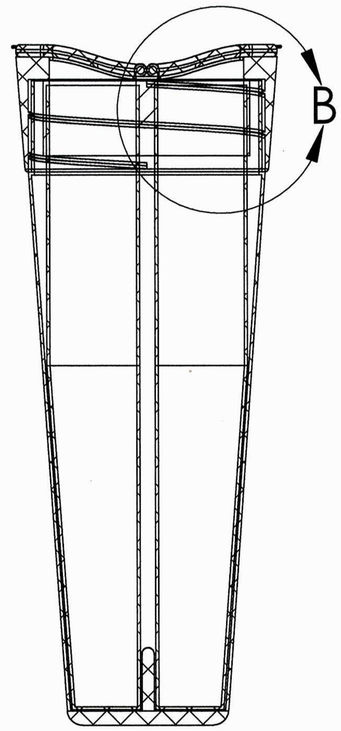

SECTION A-A

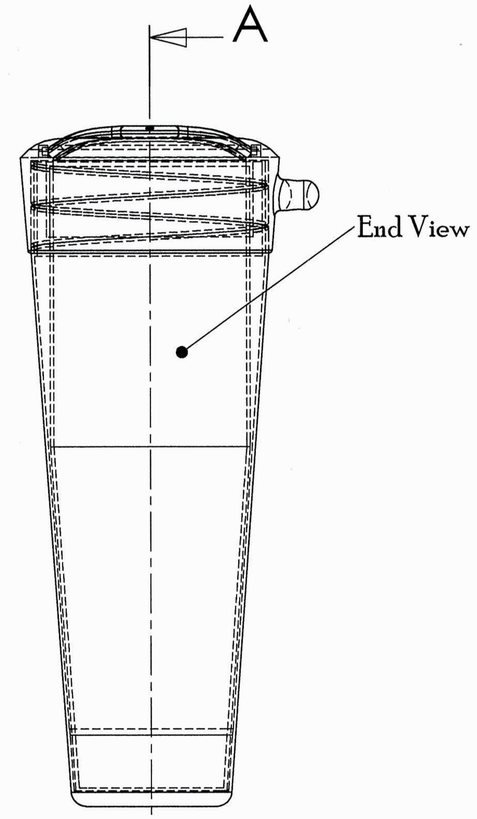

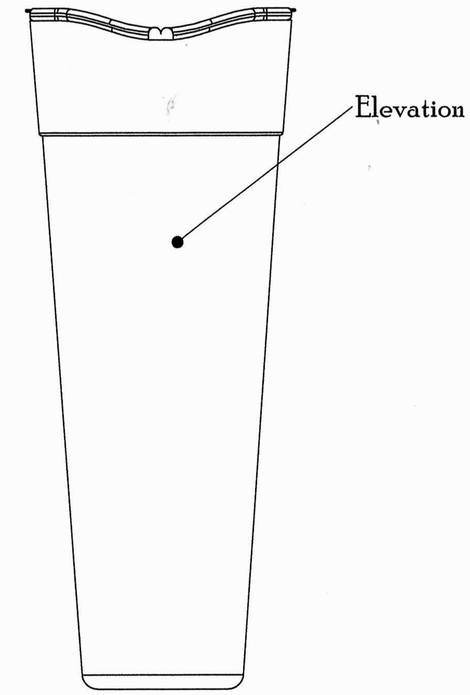

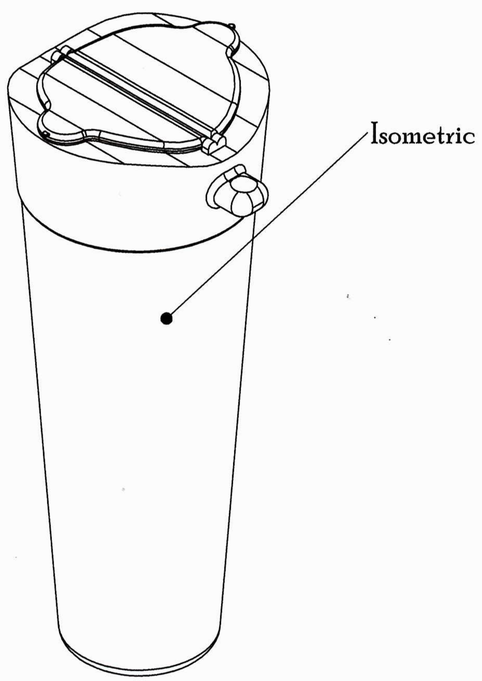

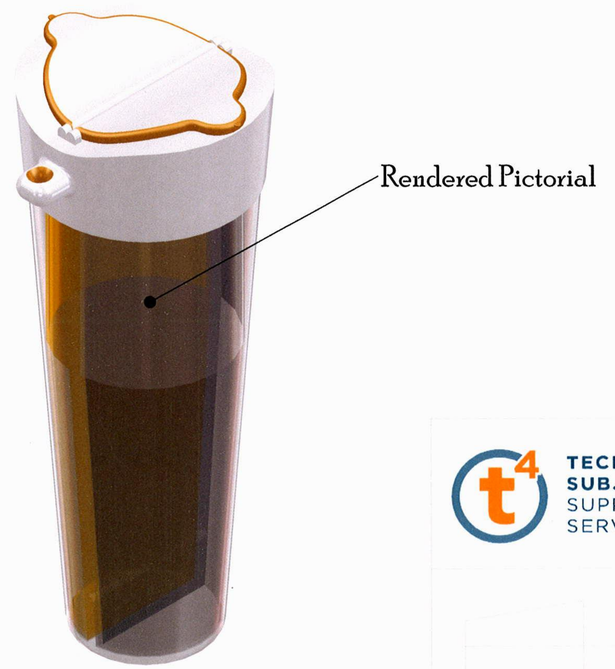

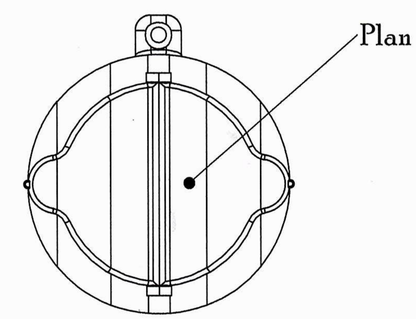

SolidWorks Educational License
Instructional Use Only

TECHNOLOGY SUBJECTS SUPPORT SERVICE

DESIGN & COMMUNICATION GRAPHICS

TITLE: HydraDuo Assembly

DRAWN BY: 132986

SIZE A3

UNLESS OTHERWISE SPECIFIED ALL DIMENSIONS ARE IN mm

SCALE: 1:2

DATE: 15/01/2014

SHEET 1 OF 2

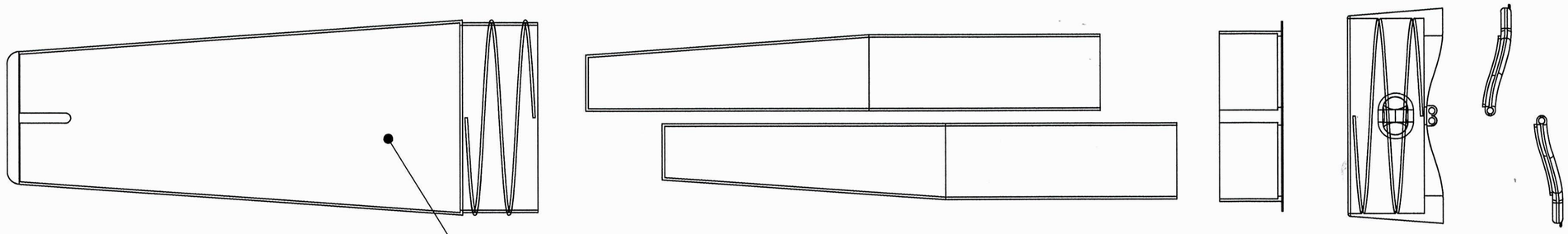

Exploded End View

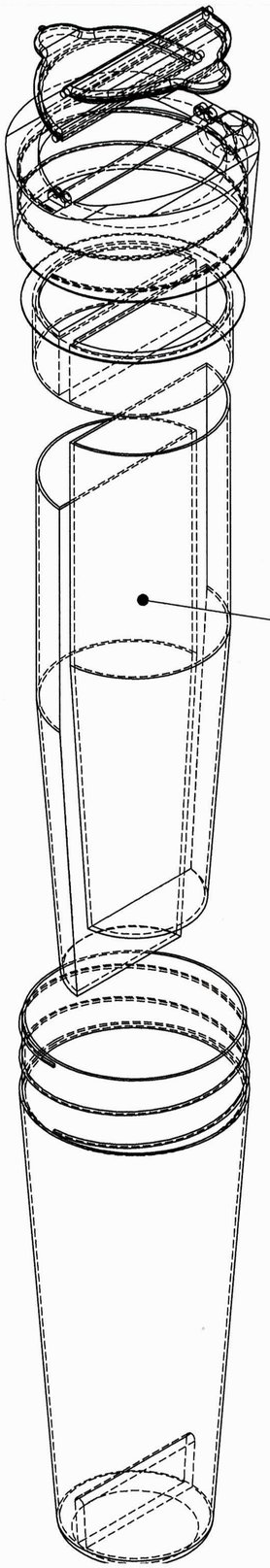

Exploded Isometric
with hidden lines visible

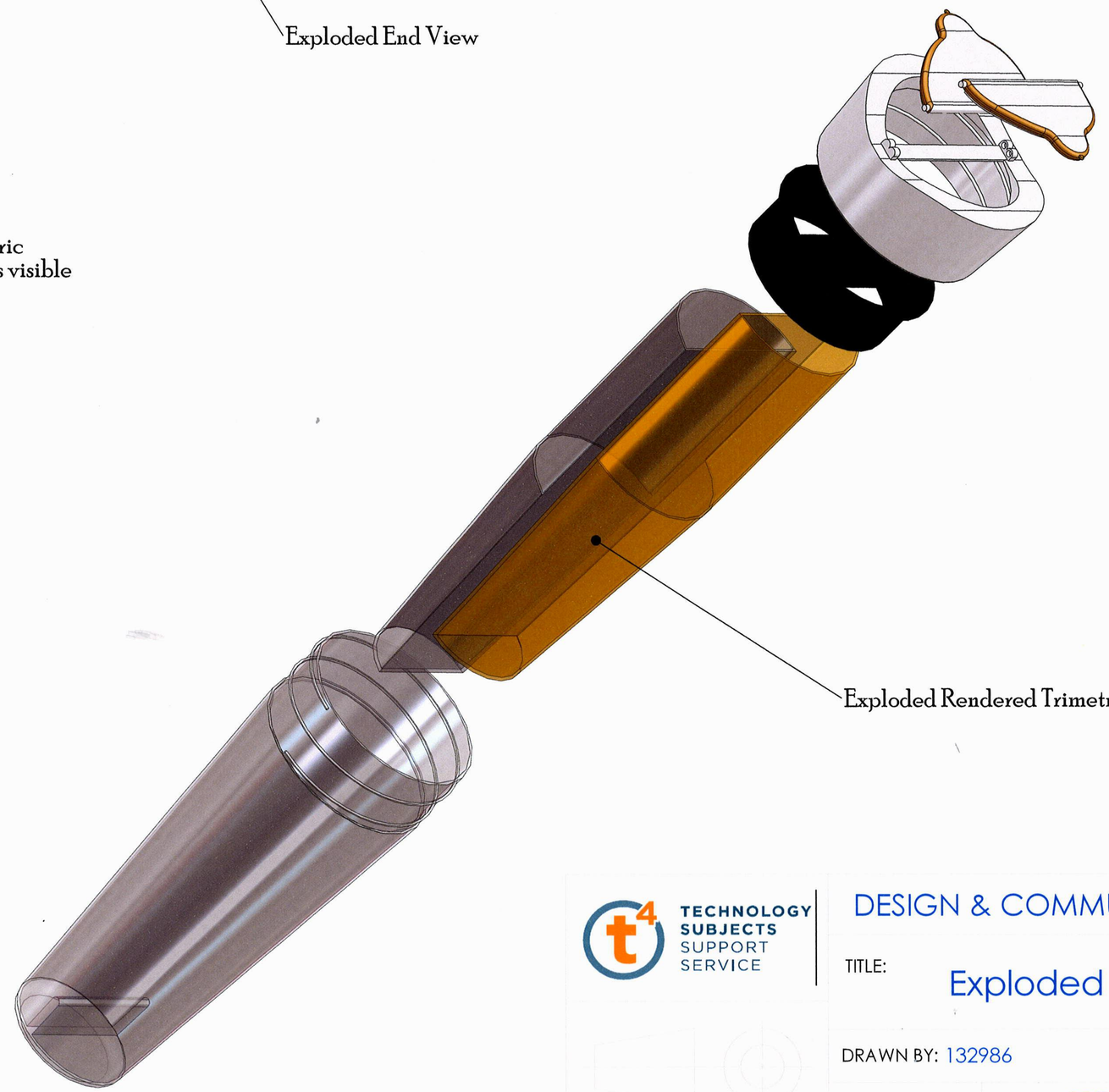

Exploded Rendered Trimetric

SolidWorks Educational License
Instructional Use Only

TECHNOLOGY SUBJECTS SUPPORT SERVICE

DESIGN & COMMUNICATION GRAPHICS

TITLE: Exploded Views

DRAWN BY: 132986

SIZE A3

UNLESS OTHERWISE SPECIFIED ALL DIMENSIONS ARE IN mm

SCALE: 1:2

DATE: 15/01/2014

SHEET 2 OF 2

Output 6 Examination Number: 132986

Photorealistic Representation

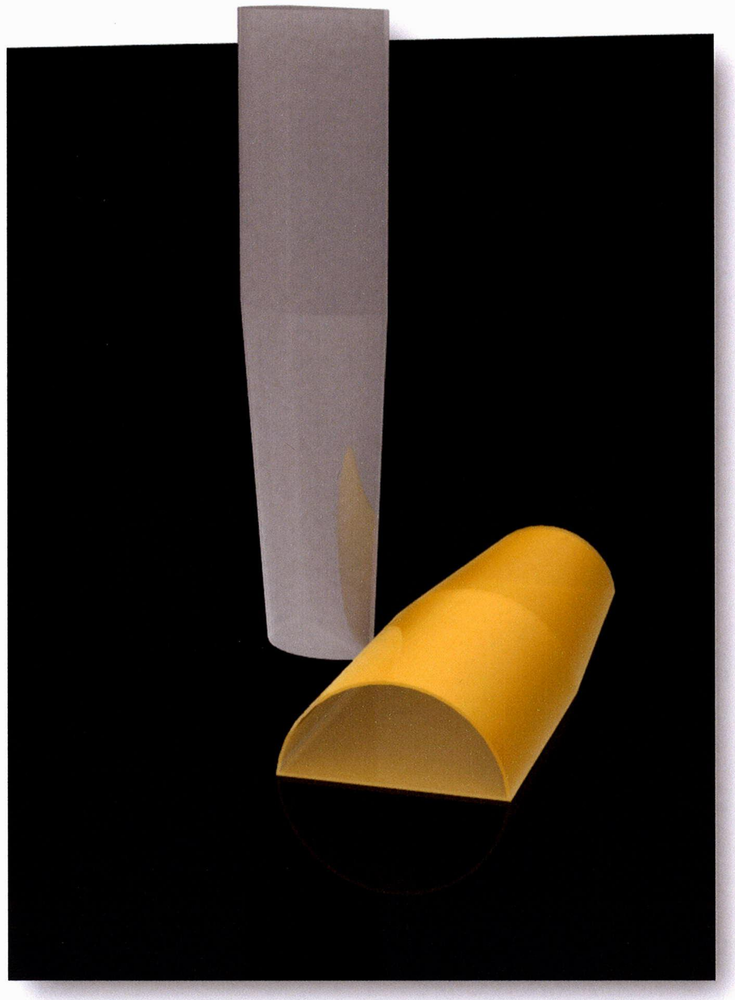

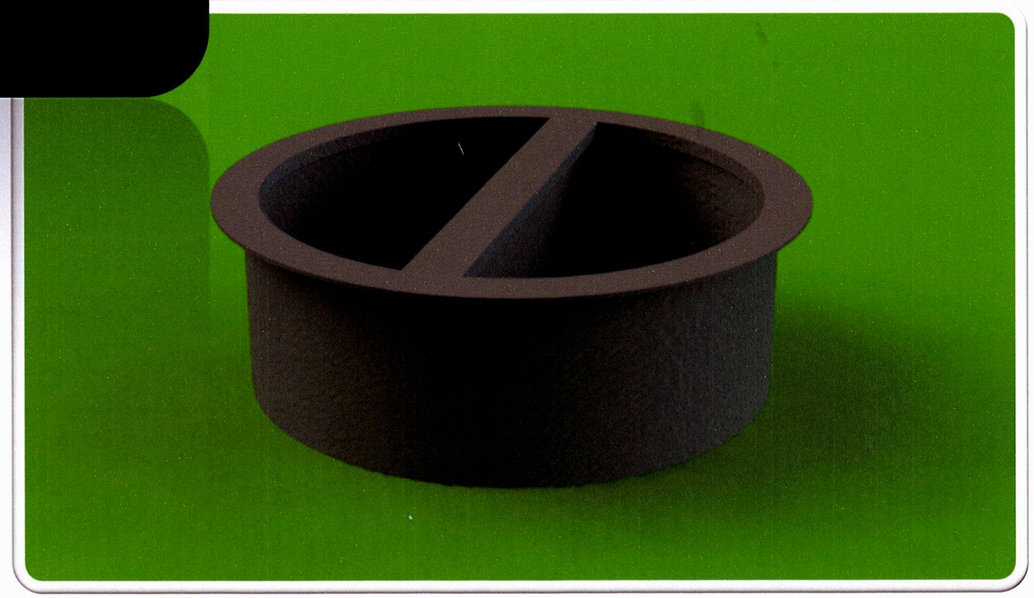

Concept Design

I decided to devise an original concept as I felt that there aren't many innovative reusable water bottles on the market today, and don't provide an interesting concept to modify creatively. I felt that designing an original concept based on a selected theme would allow for far greater freedom to accommodate for a possible target demographic, as well as allowing me to create a fresh and unique design.

Starting Points

Developing a Theme:

A good place to start is finding inspiration for a theme. From the analysis and contrasting done in outputs 1 and 2, I found the hydration carrier to be the most interesting artifact standing out from the rest. It was originally designed to be used in the military, and I thought that this would be a very interesting theme to work on as I am quite interested in the military and related activities. As the concept design was to be original, fresh and unique, I decided to look at the basis for a bottle from a different perspective.

Deciding a Basis:

To come up with a basis for the bottle, I kept in mind that it should be unique and different. Since I find firearms to be the one of the most interesting parts of military activity, as well as these weapons being widely associated with the military, I thought that basing the bottle around firearms would be the most appealing for myself while appealing to a larger demographic. To narrow down the design possibilities I decided to look into the M4 Carbine; standard issue in the United States military, because of it's sleek and efficient design.

Intended Use and Functionality:

While the aesthetics are very important in this particular concept, a few things should be considered when designing the bottle. It must resemble an M4 yet being functional and convenient as a bottle. It should remain handheld and portable yet have a large enough capacity to compare with the hydration carrier, without being over-encumbering. It should also be both a viable in the military and for the average consumer.

Analysis of Mood Board

To help organise thoughts and develop an initial design, I prepared a mood board which is shown on the right. Starting from the top it depicts a rough flow chart on my ideas and thought process to be used or considered in the final design. The images near the top of the mood board depict military insertions or other related activities. These images all have common features such as the uniform worn by the military and the weapons they use. The images near the bottom focus more around the weapons and their peripherals. I felt that the peripherals could be the defining features of the bottle's aesthetics.

Mood Board

The Tactical Bottle

1. Aesthetics

Should incorporate attachments and peripherals compatible with an M4.

The bottle must resemble the M4 carbine in some way, while following the conventional cylindrical shape of a bottle.

2. Materials

As all military grade M4 rifles are produced with aluminium, the bottle should be made from a lightweight aluminium; making it more portable.

Though it may come in many designs, I chose to use the standard black finish as is constitutes to a more sleek and stylish design

3. Functionality

The M4 is an extremely versatile weapon, and therefore the concept should integrate a similar versatility.

The defining features of the M4 includes how modifiable it is. I thought that adding the possibility to modify the bottle in some way would portray the M4 excellently.

4. Environmental Sustainability

Much like the rifle, the bottle should be extremely resistant to weathering and damage.

5. Mounting Devices

A bipod may be attached to the mounting rail to display the bottle in a stylish fashion, keeping true to the original design of a rifle.

To mount the bottle on a backpack or any other suitable object, a carabiner clip may be attached to arches around the bottle.

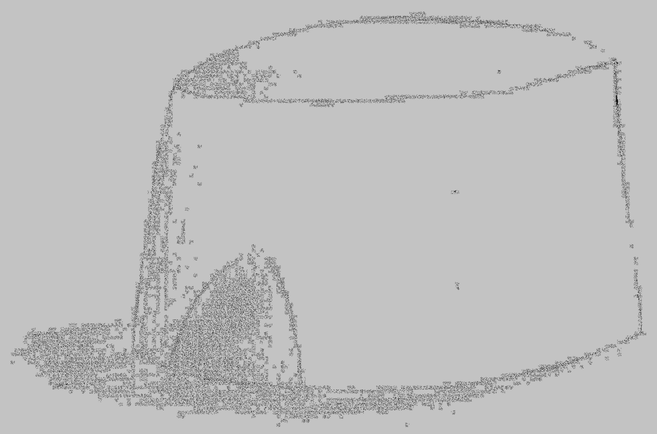

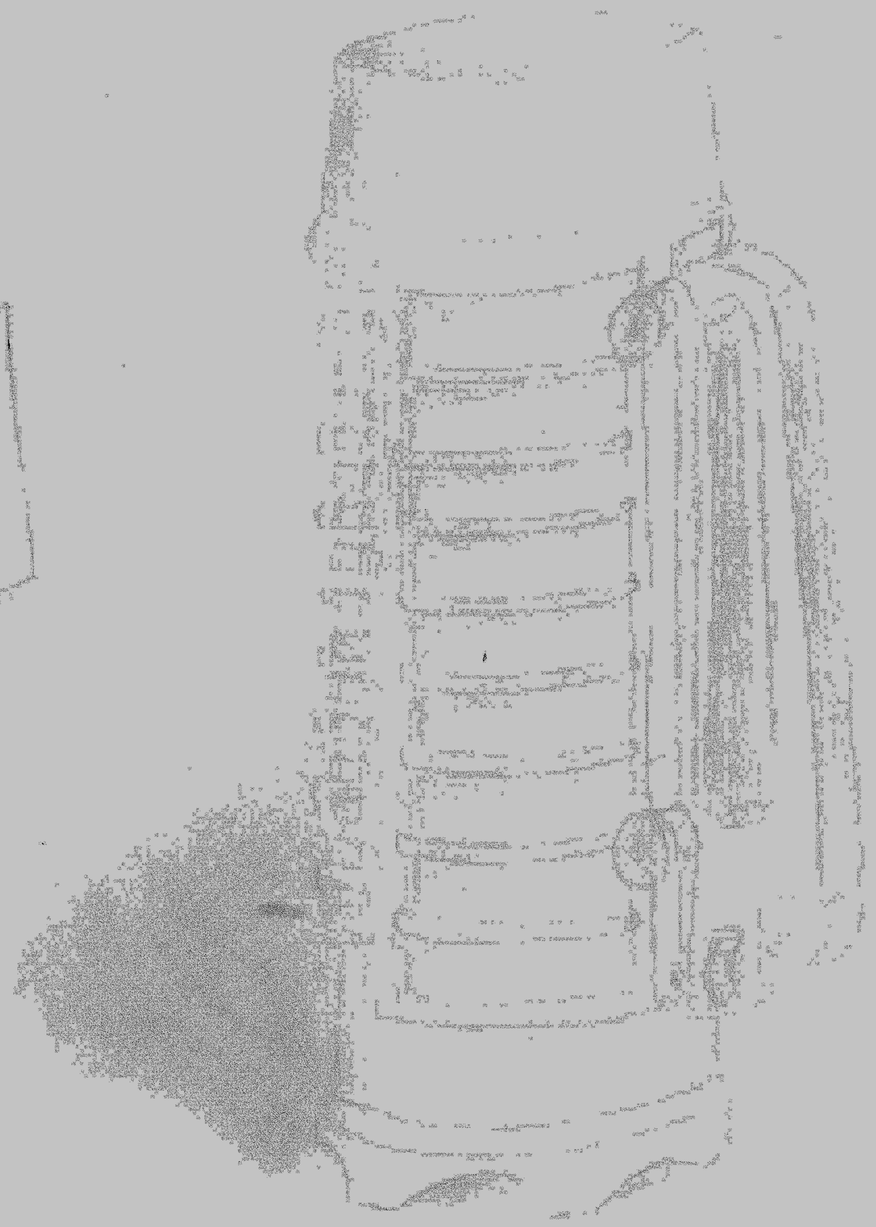

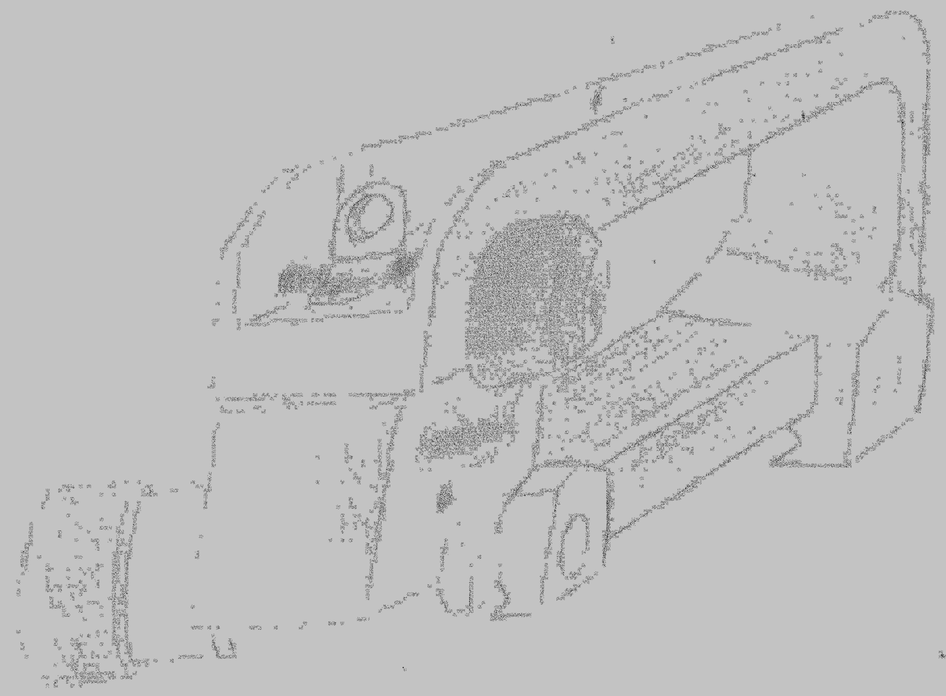

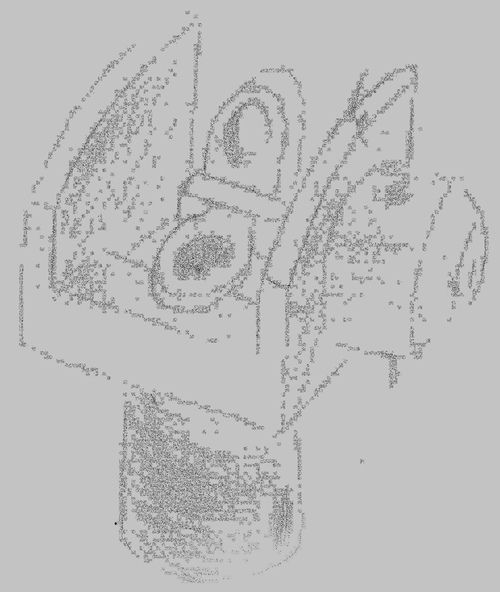

Output 8 Examination Number: 132986

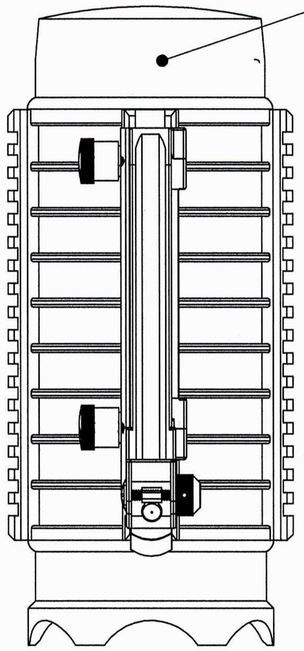

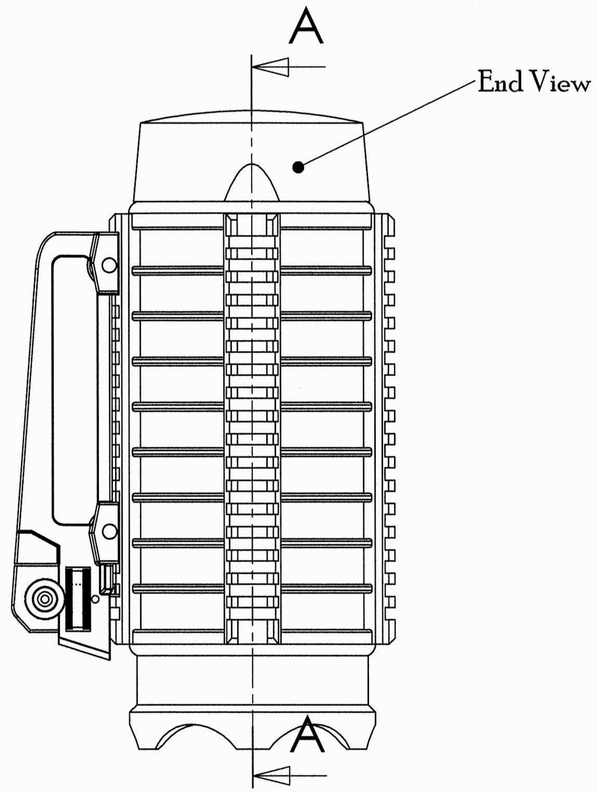

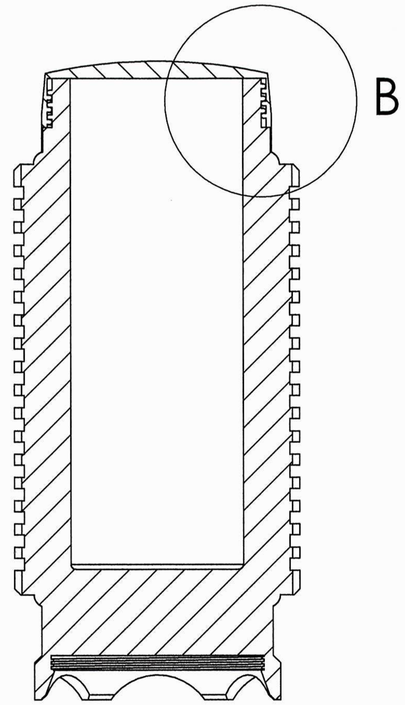

SECTION A-A
SCALE 1 : 2.5

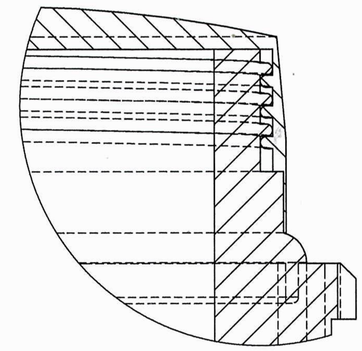

DETAIL B
SCALE 1 : 1

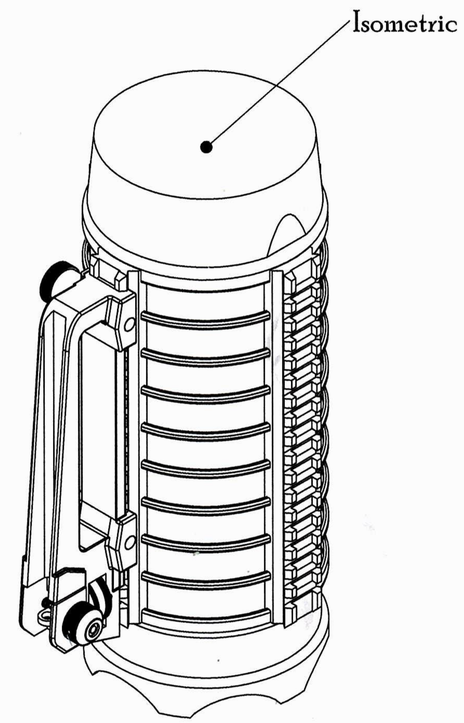

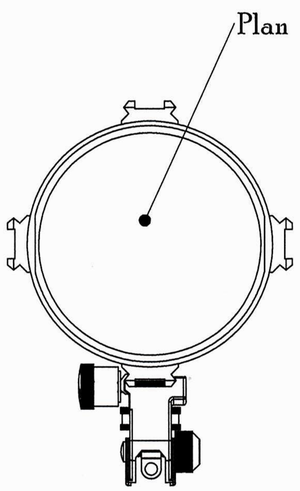

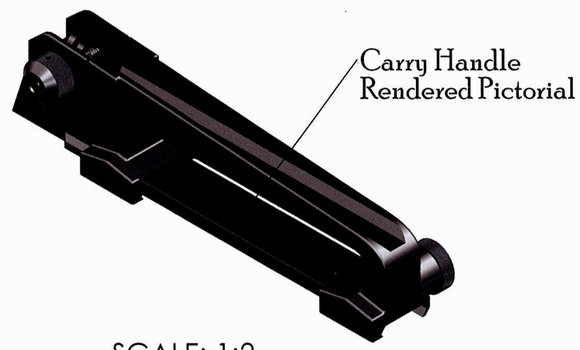

SCALE: 1:2

SolidWorks Educational License
Instructional Use Only

TECHNOLOGY SUBJECTS SUPPORT SERVICE

DESIGN & COMMUNICATION GRAPHICS

TITLE: Tactical Bottle Assembly

DRAWN BY: 132986

SIZE A3

UNLESS OTHERWISE SPECIFIED ALL DIMENSIONS ARE IN mm

SCALE: 1:2.5

DATE: 15/01/2014

SHEET 1 OF 2

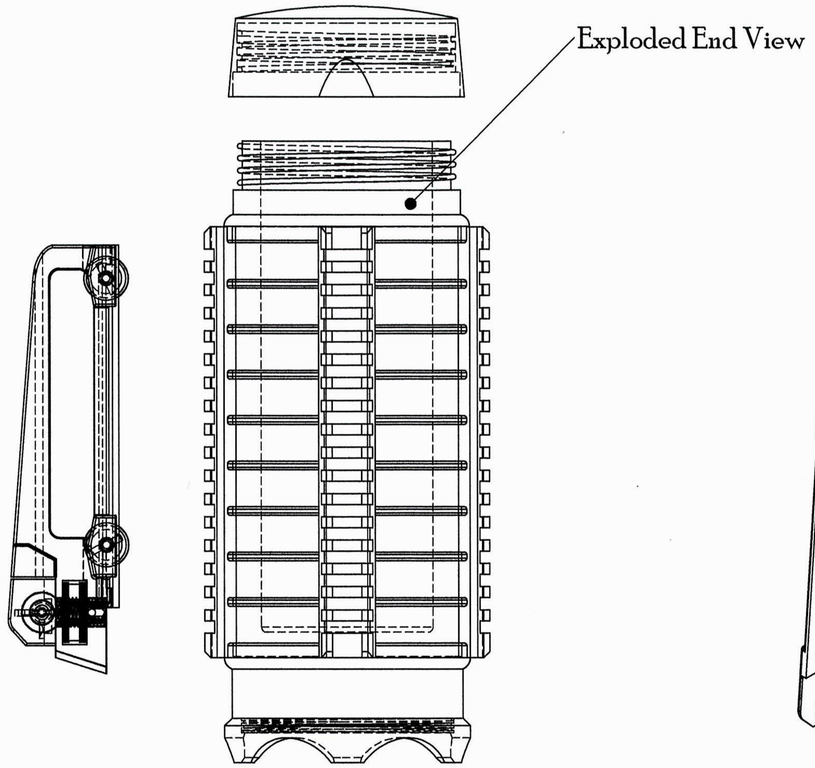

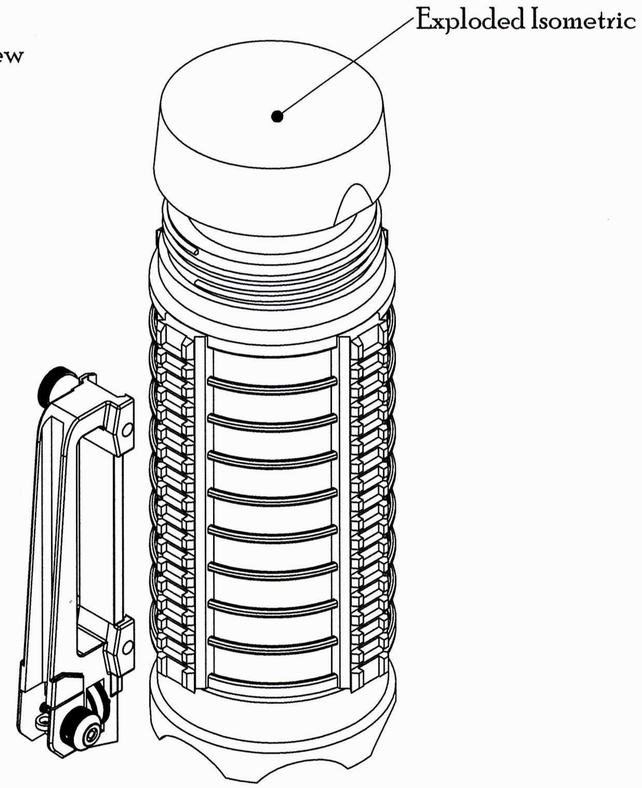

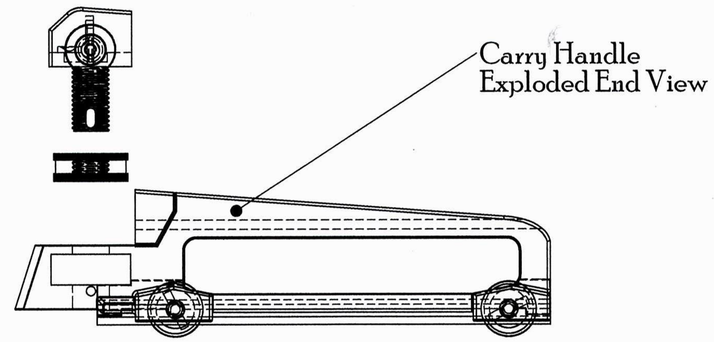

SCALE: 1:2

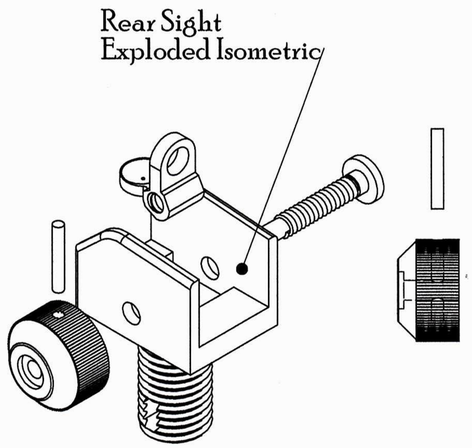

SCALE: 1:1

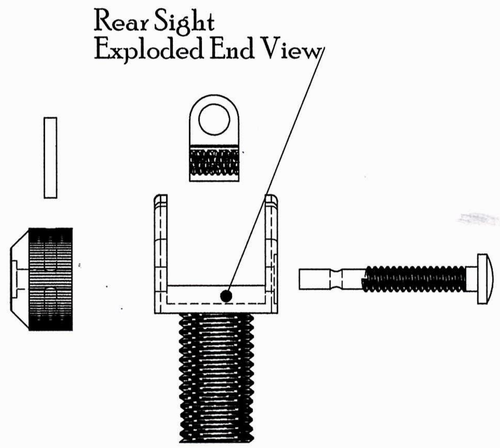

SCALE: 1:1

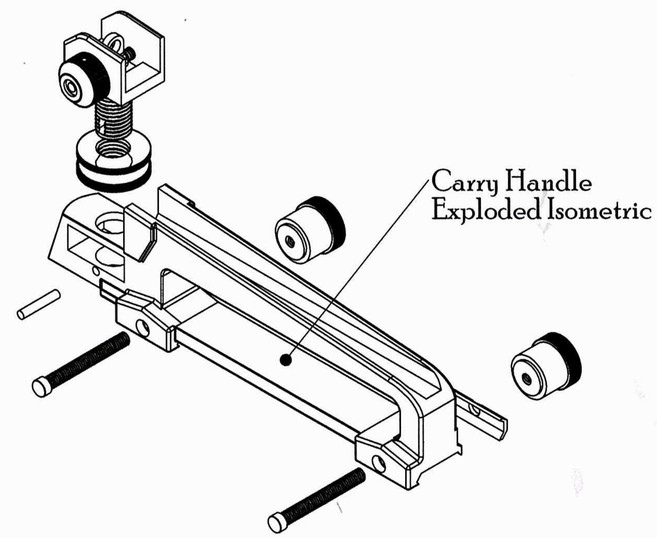

SCALE: 1:2

SolidWorks Educational License
Instructional Use Only

TECHNOLOGY SUBJECTS SUPPORT SERVICE

DESIGN & COMMUNICATION GRAPHICS

TITLE: Tactical Bottle Exploded Views

DRAWN BY: 132986

SIZE A3

UNLESS OTHERWISE SPECIFIED ALL DIMENSIONS ARE IN mm

SCALE: 1:2.5

DATE: 15/01/2014

SHEET 2 OF 2

Photorealistic Representation

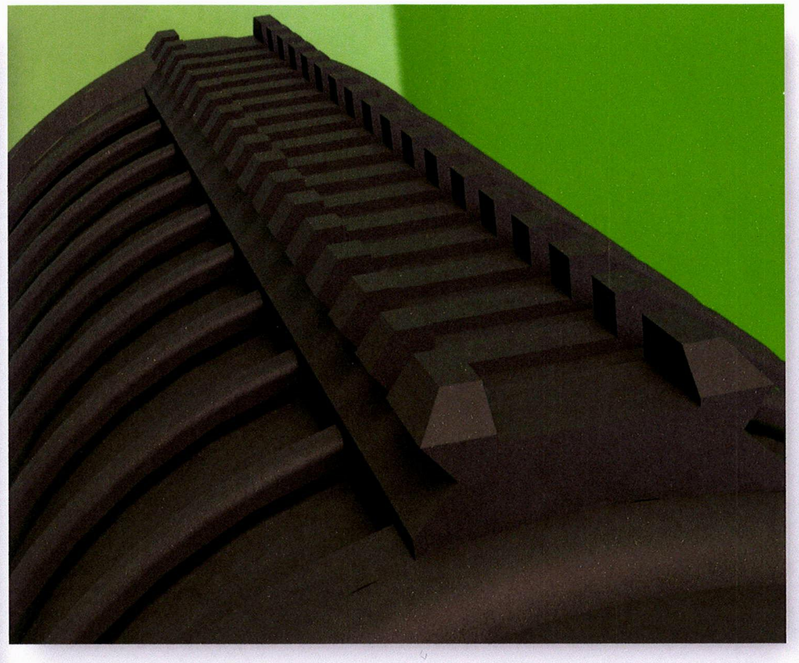

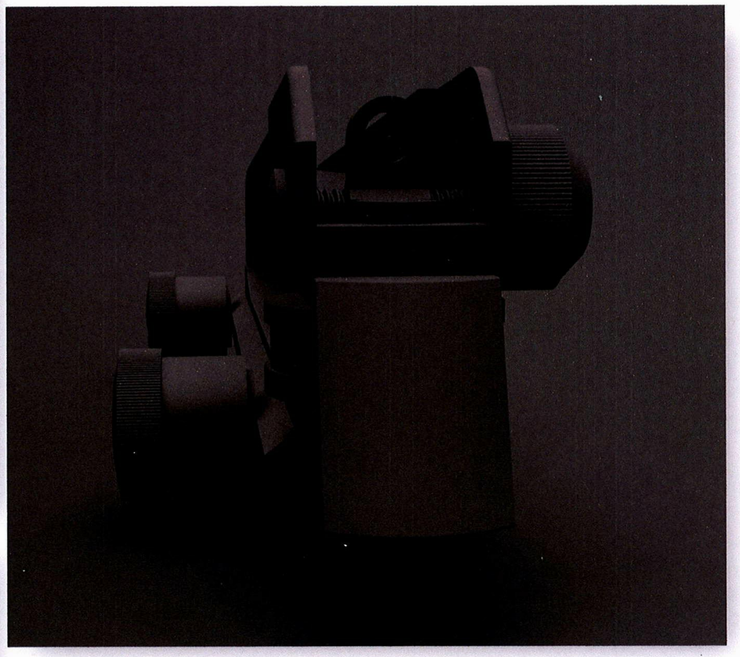

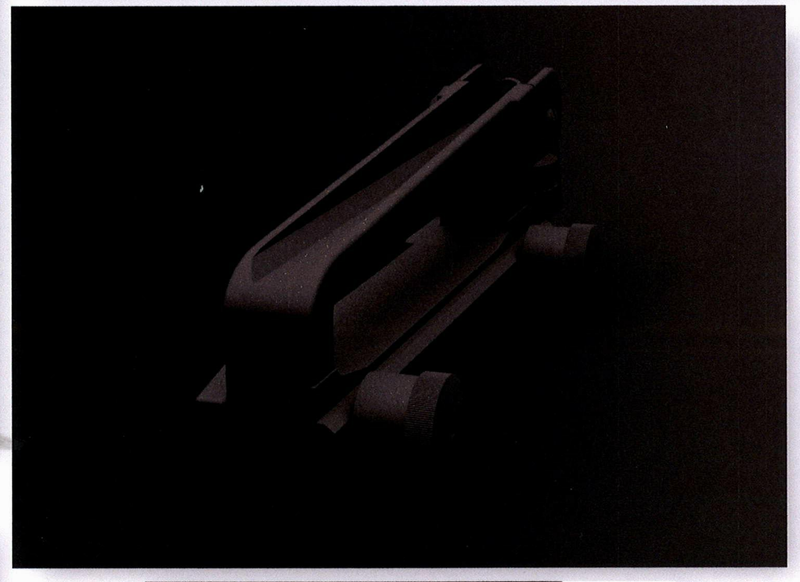

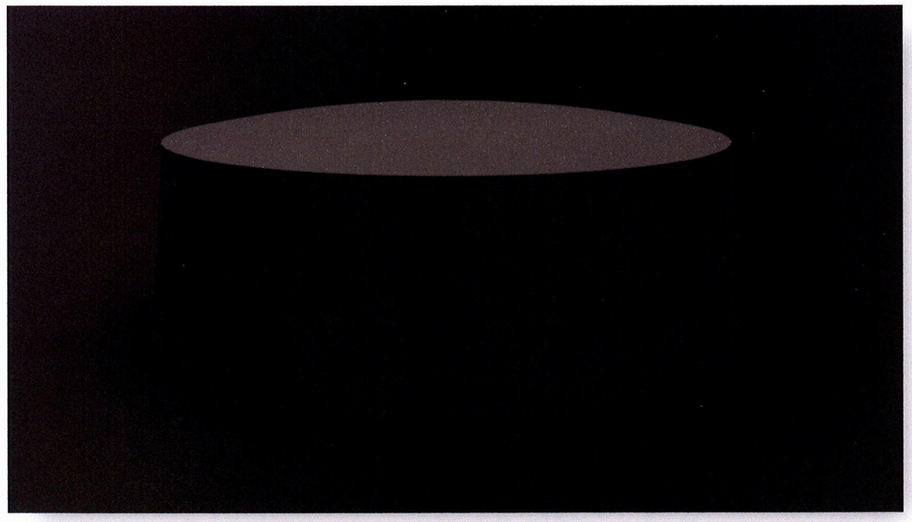

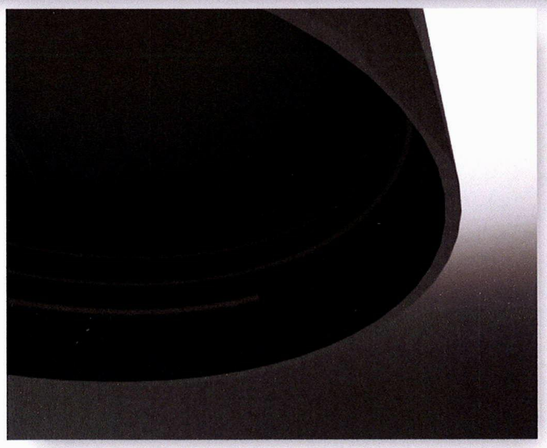

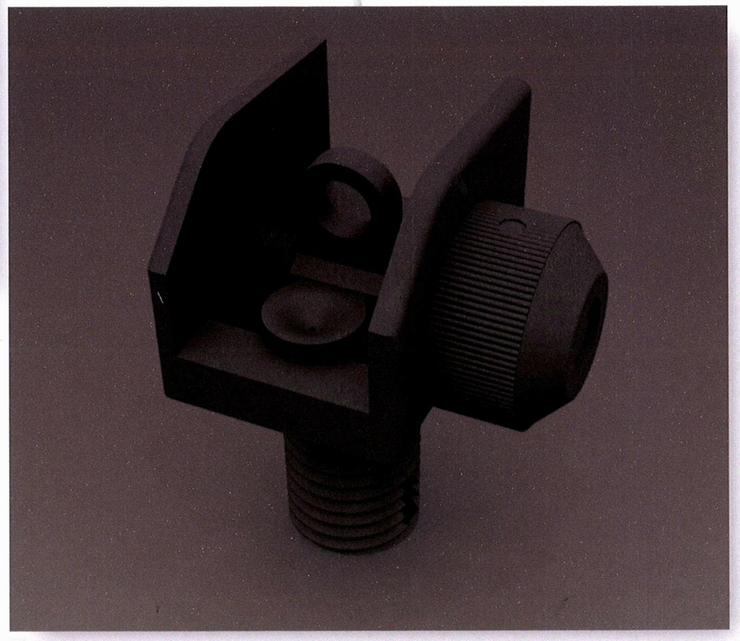

Output 8 Examination Number: 132986

References

1. http://www.zoggs.com/media/catalog/product/cache/1/image/9df78eab33525d08d6e5fb8d27136e95/s/t/store6_item5711_version2_300831-aquasports-bottle.jpg
2. http://www.greenbeautyandstyleslices.com/wp-content/uploads/2009/01/earthlust-long-water-bottles.jpg
3. http://www.petmosestore.com/img/p/99-593-zoom-img.jpg
4. http://www.lucozadeshop.com/Images/Product/Default/main/lucozade-sportbottle1000.jpg
5. http://www.first-aid-store.com/images/L/LGFUSIONL_OPEN.jpg
6. http://www.netsport24.de/images/Camelbak_Bottle_Podium_blau.jpg
7. http://static.brit.co.s3.amazonaws.com/wp-content/uploads/2013/05/4-Boombottle.jpg
8. http://cloud.faout.com/A/201304/goods-img/1365460622758-P-719420.jpg
9. http://img.ehowcdn.com/article-new-thumbnail/ehow/images/a07/kk/hq/use-reusable-water-bottle-800x800.jpg
10. http://img.dxcdn.com/productimages/sku_25108_1.jpg
11. http://cdn.foodbeast.com.s3.amazonaws.com/content/wp-content/uploads/2011/11/dual-chamber-3.jpg
12. http://www.asia.ru/images/target/photo/51647739/Foldable_Water_Bottle__Foldable_Sports_Bottle.jpg
13. http://shop.camelbak.com/store/productimages/regular/50205_auc_l.jpg
14. http://www.redferret.net/wp-content/uploads/2010/09/contigosportsbottlesafe.jpg
15. http://www.promotionalgiftsshop.com/prodimages/track-500ml-sports-bottle.jpg
16. http://www.geekalerts.com/u/HydraDuo-Water-Bottle1.jpg
17. http://cdn.foodbeast.com.s3.amazonaws.com/content/wp-content/uploads/2011/11/dual-bottle-chamber.jpg
18. http://i01.i.aliimg.com/photo/v0/107411161/Army_ACU_Universal_Digital_Camouflage_Waterproof_Breathable.jpg

Part B Images

http://cdn.icewallpapers.com/1920x1200/military_team-1920x1200.jpg
http://www.defencetalk.com/wp-content/uploads/2009/05/m4-carbine-firing.jpg
http://akashictimes.co.uk/wp-content/uploads/2014/01/military.jpg
http://static.progressivemediagroup.com/uploads/imagelibrary/Colt_M4_Carbine_Army.jpg
http://simage1.sportsmansguide.com/adimgs/1/2/236196_ts.jpg
http://upload.wikimedia.org/wikipedia/commons/4/4b/Cartridges_comparison.jpg
http://radicalsurvivalism.com/web/wp-content/uploads/Tactical_Flashlight.jpg
http://www.laststandtactical.com/content/images/thumbs/0004543_m4-handguard-double-insulated-premium.gif
http://www.judydouglass.com/wp-content/uploads/2010/07/bullet-mista.jpg

All other images are from primary research