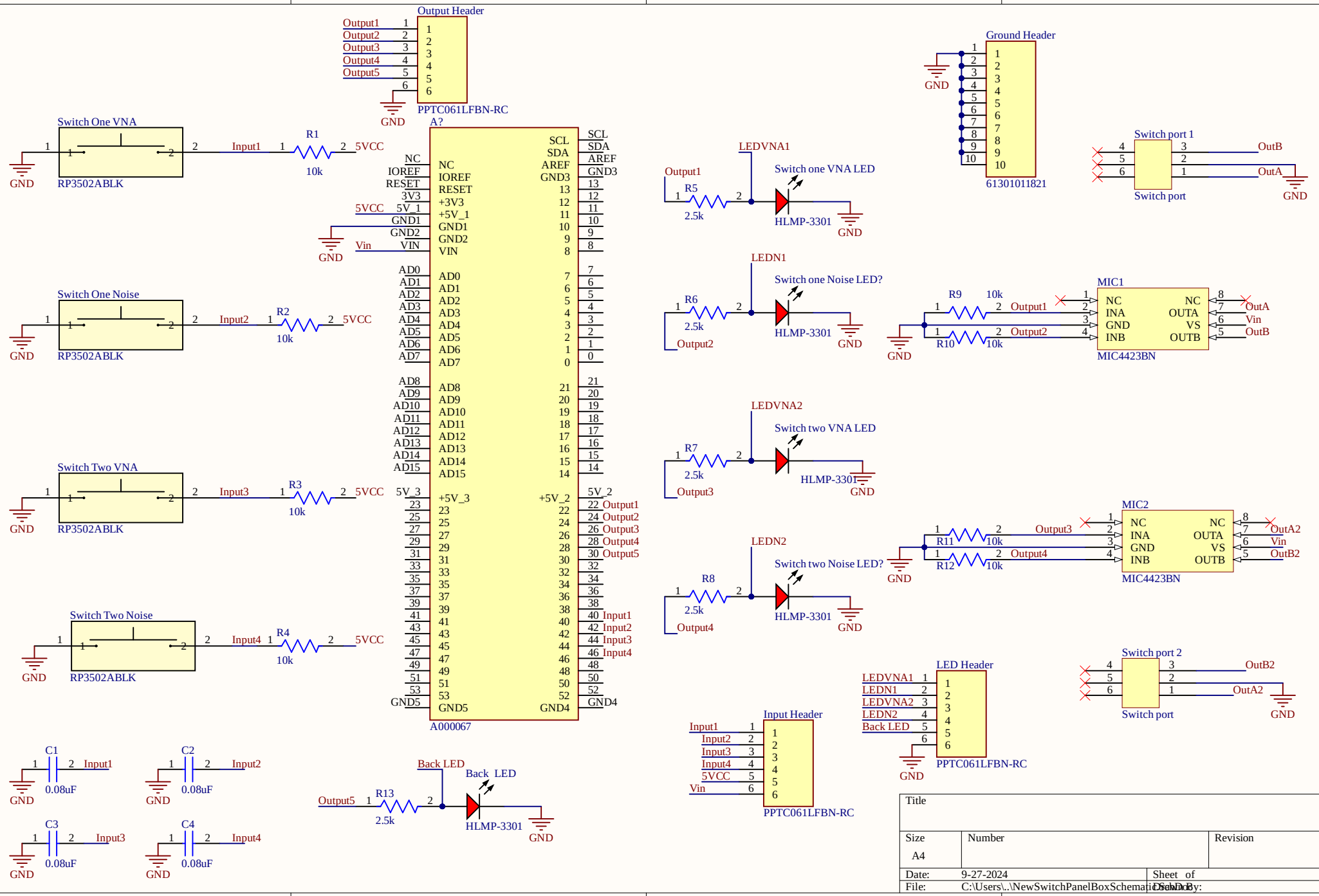
Output Header
PPTC061LFBN-RC
Ground Header
61301011821
Switch One VNA
RP3502ABLK
Switch One Noise
Switch Two VNA
Switch Two Noise
A?
A000067
LEDVNA1
Switch one VNA LED
HLMP-3301
LEDN1
Switch one Noise LED?
LEDVNA2
Switch two VNA LED
LEDN2
Switch two Noise LED?
MIC1
MIC4423BN
MIC2
Switch port 1
Switch port 2
Switch port
LED Header
Input Header
Back LED
Title
Size
A4
Number
Revision
Date: 9-27-2024
Sheet of
File: C:\Users\..\NewSwitchPanelBoxSchematic.SchDoc
Drawn By: