Tektronix

PCI Express 5.0 Update: Keys to Addressing an Evolving Specification

6/9/2020

Agenda

1	2	3	4
PCI Express 5.0 Specification Status	PCI Express 5.0 CEM Tx	PCI Express 5.0 32GT/s Rx Calibration and Test	PCI Express 5.0 Refclk Jitter Measurements

PCI Express 5.0 Specification Status

PCIe 5.0 Specification Snap Shot (4/8/2020)

- **PCIe 5.0 Base Specification – Rev 1.0 Released (Q2 2019)**
  - Describes chip-level behavior on all levels of the stack
- **PCIe 5.0 CEM Specification – Rev 0.7 under development**
  - Card electro-mechanical (CEM) defines system and Add-in Card level
- **PCIe 5.0 PHY Test Specification – Rev 0.3 workgroup approved**
  - Describes electrical compliance tests for Tx, Rx LEQ, & PLL Bandwidth
- **PCIe 4.0 – All Specifications at Rev 1.0**
  - Integrators List testing began August 2019

PCIe 4.0 to 5.0 Base Specification Changes

	PCIe 4.0	PCIe 5.0
Data Rate	16 GT/s	32 GT/s
Channel Loss (Rx Test Range)	- (27 to 30) dB @ 8GHz	- (34 to 37) dB @ 16GHz
Add-in Card Loss	8dB @ 8Ghz	9.5dB @ 16GHz
Reference CTLE	2 Poles; 1 Zero; DC Gain Range (-6 to -12) dB	4 Poles; 2 Zero; DC Gain Range (-5 to -12) dB
Reference DFE	2-Taps	3-Taps
Eye Width (Rx Test)	18.75 ps	9.375 ps
Eye Height (Rx Test)	15 mV	15 mV
Rx Jitter Tolerance	Separate curves for CC & SRIS at 16GT/s	One curve for CC & SRIS at 16GT/s & 32GT/s
Lane Margining	Required for timing only	Required for timing and voltage
Refclk High Freq Jitter Limits	<= 500 fs	<= 150 fs

PCIe 5.0 Channel Solution Space

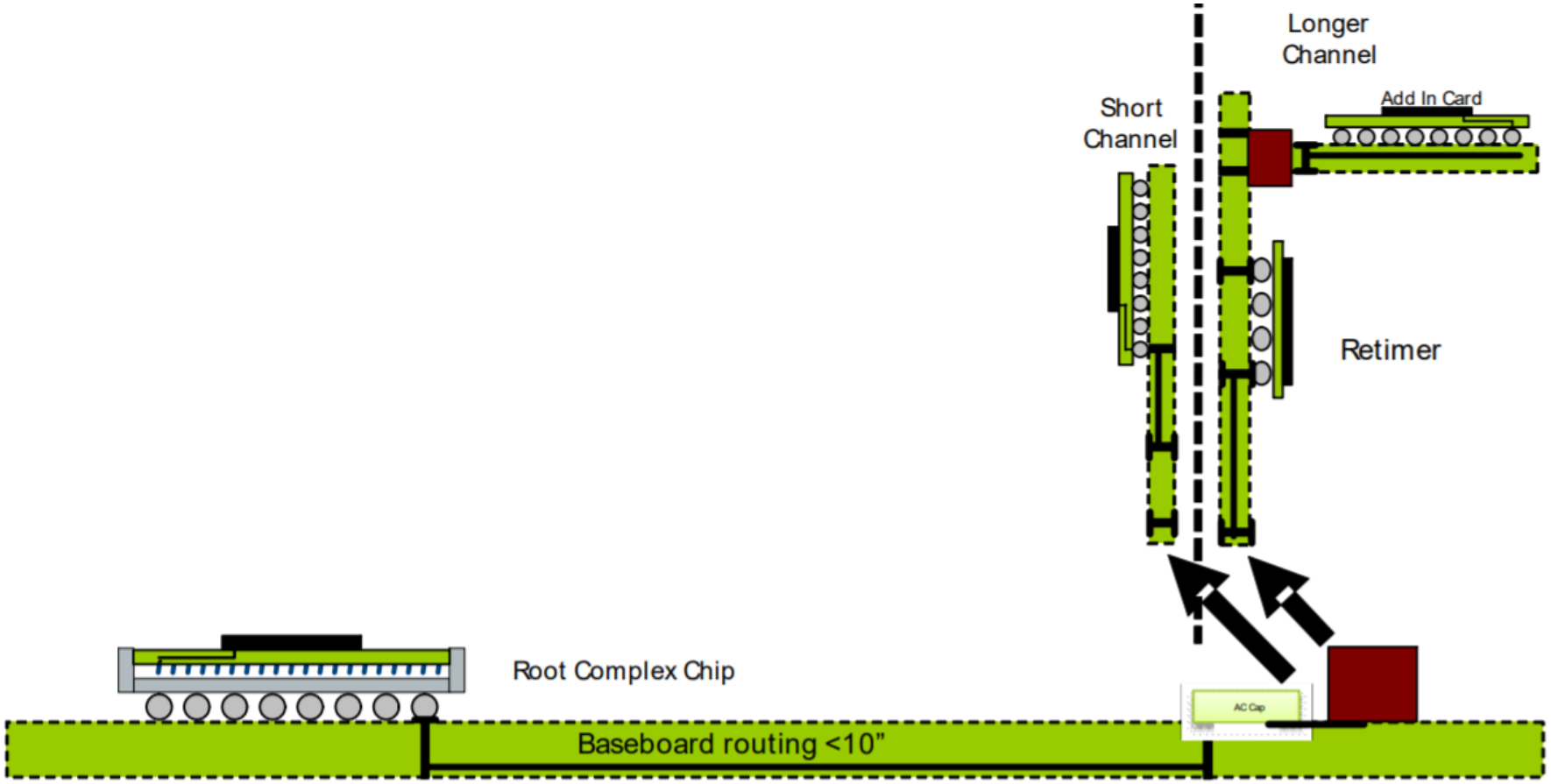

- End to end loss target ~= 36 dB
- Root Package loss ~= 9 dB
- Add-in Card Package loss (Non root) ~= 4 dB

Link Equalization Bypass

- PCIe 5.0 optional Link EQ Training Bypass
- Train directly from 2.5 GT/s to 32 GT/s
  - 2.5GT/s -> 32GT/s
- Traditional Training still Supported
  - 2.5GT/s > 8GT/s > 16GT/s > 32GT/s
- If lower rates don't preform link training they cannot be utilized
- ~200ms time savings to L0 at 32GT/s
- Option to skip Link EQ entirely if all components in the link support

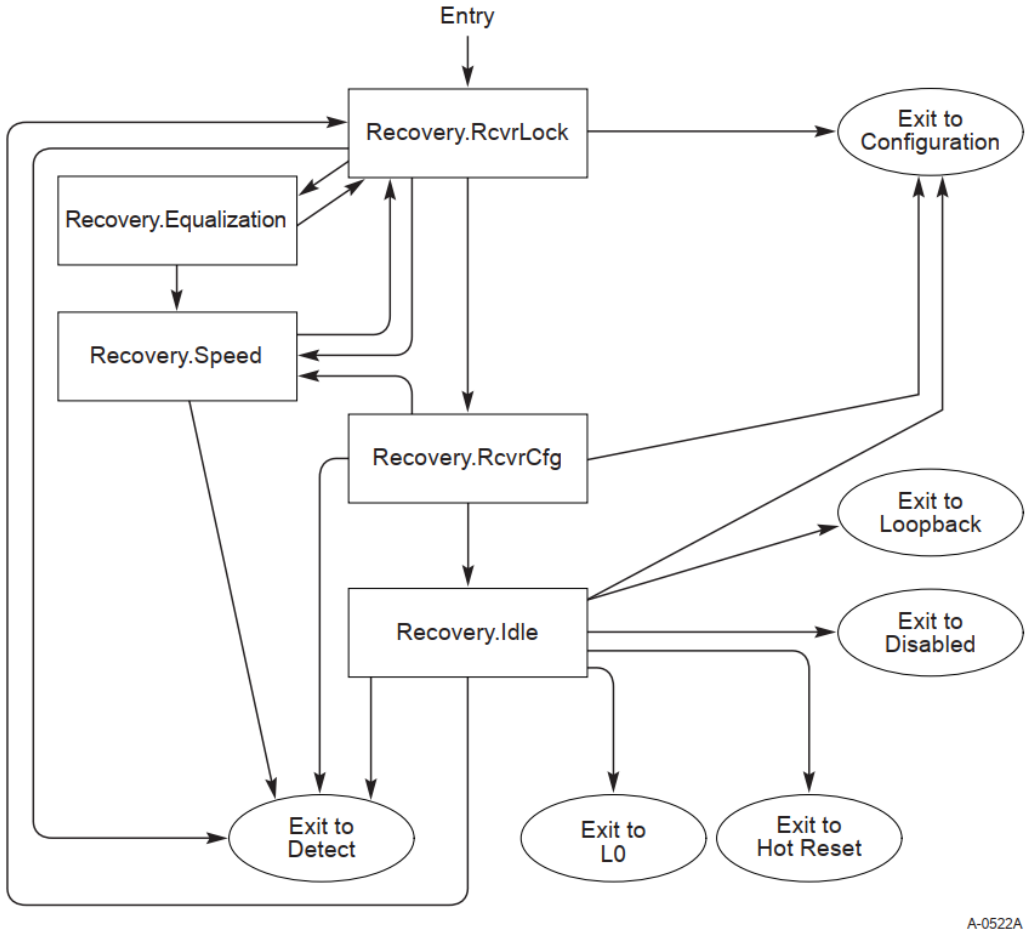

Burst Error Prevention

- Burst Errors are more likely at 32GT/s given the DFE tap ratios
- This error propagation can occur with 101010 patterns
- Precoding limits toggle pattern occurrences
- Receivers may request precoding from its transmitter at data rates >= 32 GT/s
- Enabled through Training Sets

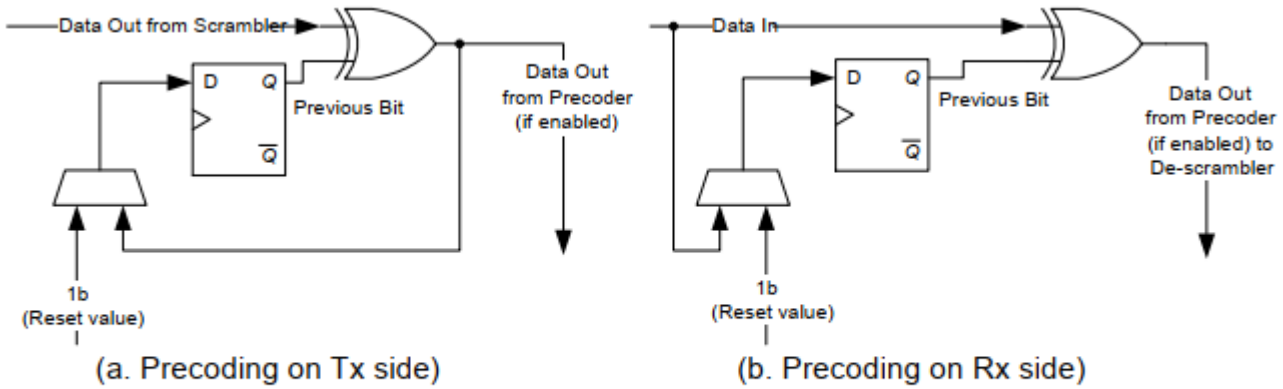

Figure 4-20 Precoding working the scrambler/ de-scrambler

Updated Connector & Edge Finger Layout

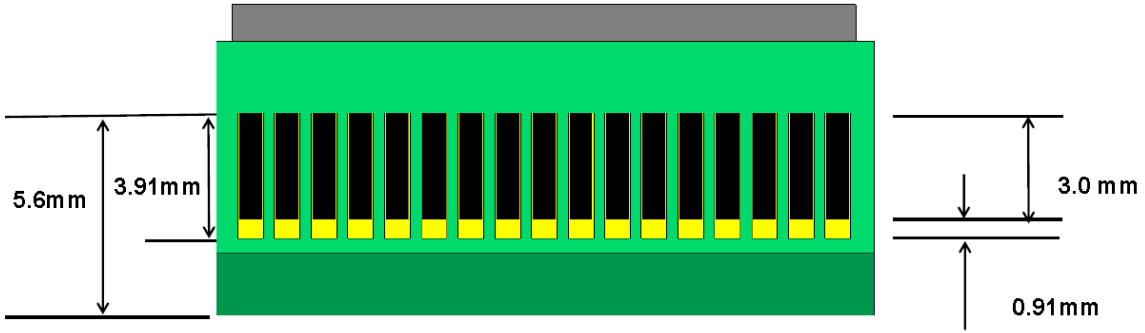

Yellow pad : 3.91 x 0.7mm , PCIe Gen4 pad
Black pad : 3.0 x 0.6mm +-~.038mm(~1.5mil) , PCIe Gen5 pad

- Only SMT CEM connectors allowed
- CEM connector layout optimizations
  - Gnd vias at both sides of pad
  - Pad size reduction
- Edge Finger layout optimizations
  - Edge Finger Dimension reduction
  - Gnd plane beneath edge fingers

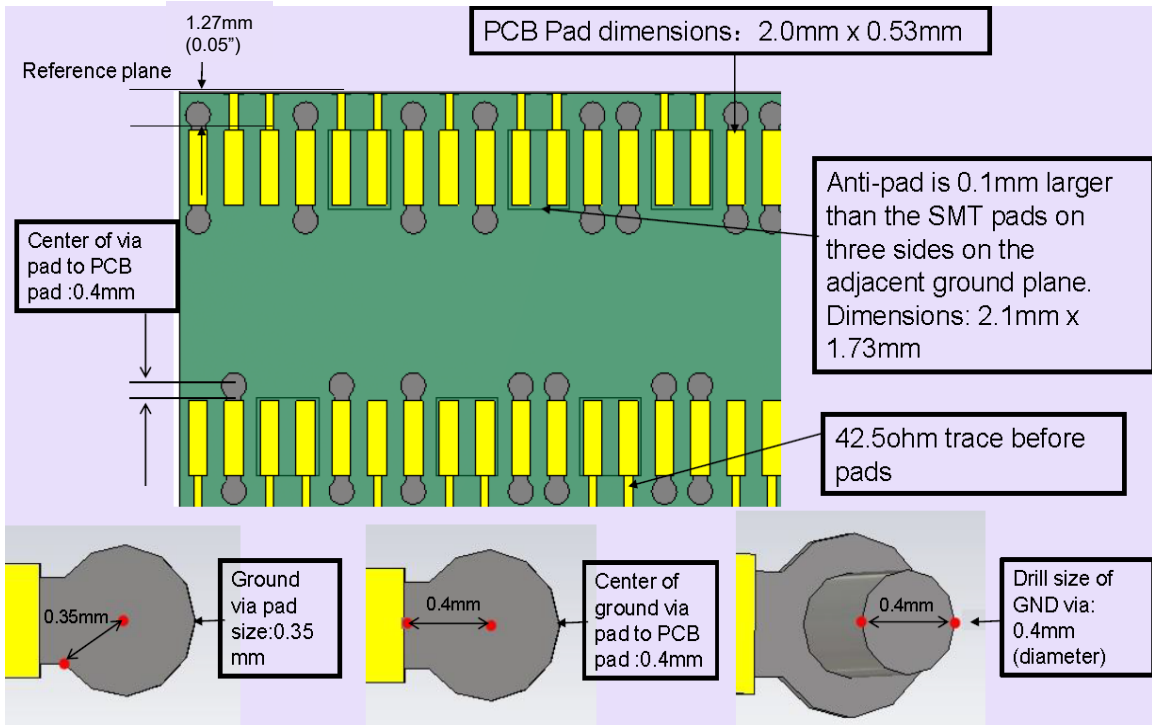

PCI Express 5.0 CEM Tx

PCIe 2.0 Dual Port Model for MB Tx

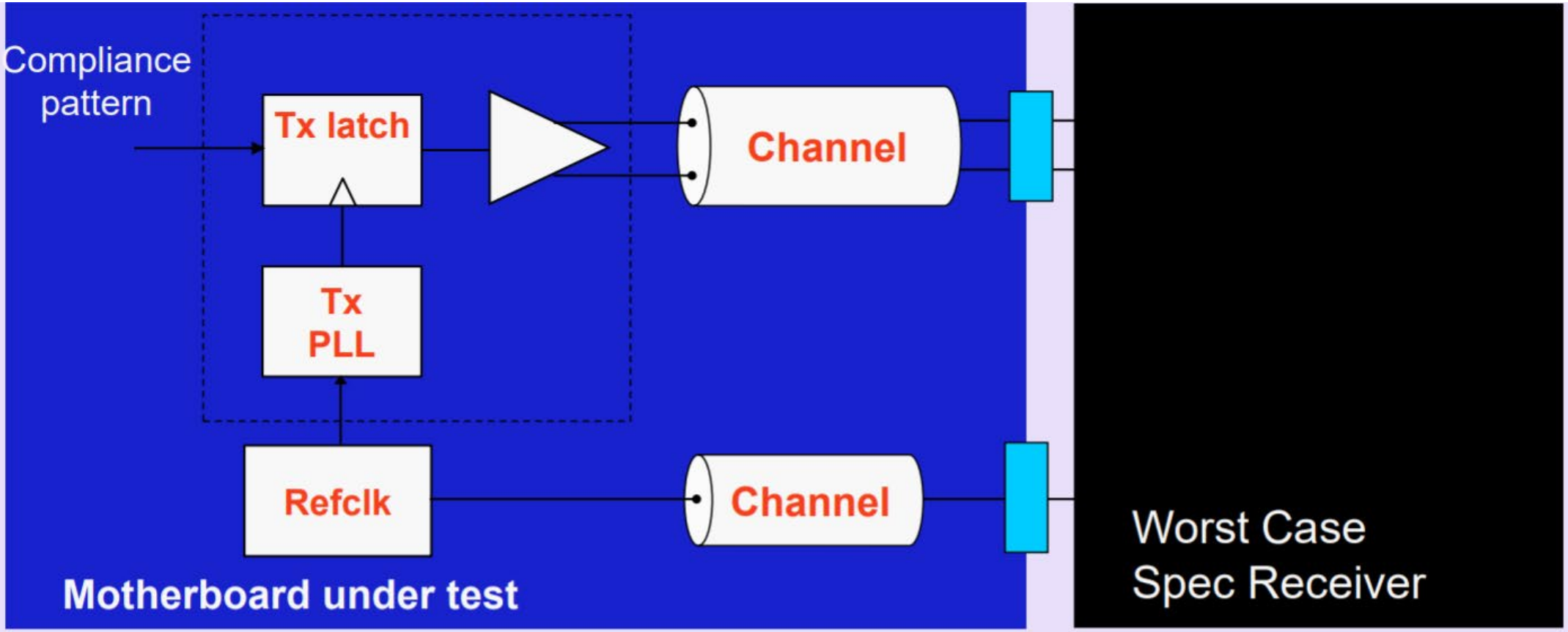

- How Does System Look With A Worst Case Spec Receiver?
  - ✓ Assume Common Clock Receiver
  - ✓ Assume worst case legal receiver PLL and add-in card delay

PCIe Reference Clock Jitter

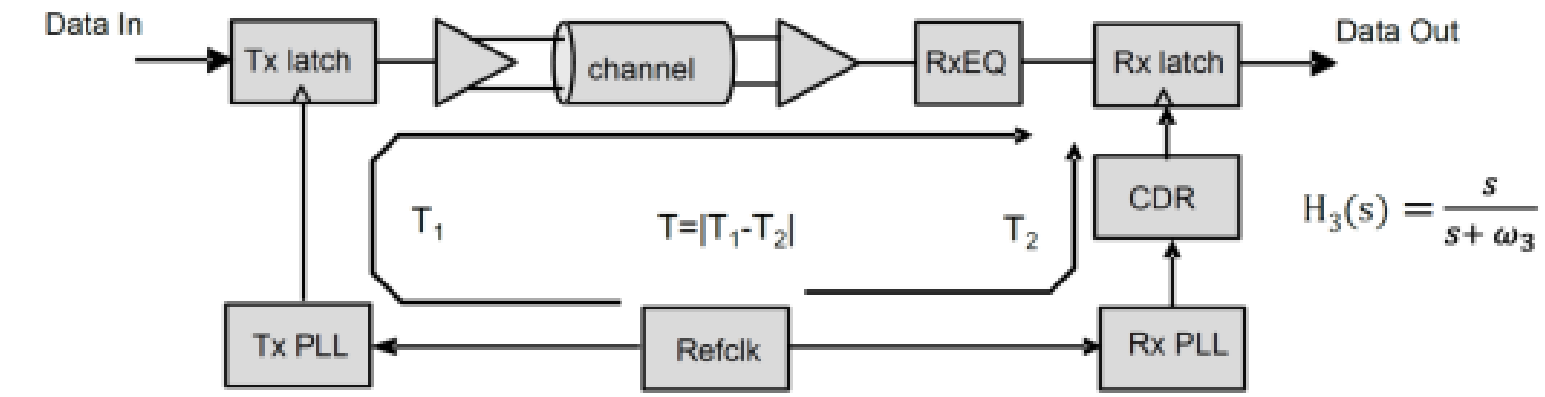

$$H_1(s) = \frac{2s\zeta_1\omega_{n1} + \omega_{n1}^2}{s^2 + 2s\zeta_1\omega_{n1} + \omega_{n1}^2}$$

$$H_2(s) = \frac{2s\zeta_2\omega_{n2} + \omega_{n2}^2}{s^2 + 2s\zeta_2\omega_{n2} + \omega_{n2}^2}$$

Transfer Function: $[H_1(s)e^{-sT} - H_2(s)]H_3(s)$

Jitter at Rx latch

$$\left.\begin{array}{l} X(s)[H_1(s)e^{-sT} - H_2(s)]H_3(s) \\ X(s)[H_2(s)e^{-sT} - H_1(s)]H_3(s) \end{array}\right\}$$

Compute both and use the larger of the two

Figure 8-57: Common Refclk Rx Architecture

PCIe 2.0 Dual Port Algorithm Overview

- Capture clock and data simultaneously
- Apply min/max bandwidth and peaking PLL filters to reference clock – producing several different filtered clock records
- Use each filtered clock record to compute phase jitter array for data using several different phase alignments to represent the min/max shift in phase that could occur on an add-in card
- The total jitter is the largest number obtained across all PLL bandwidths and phase alignments

Dual Port Comparison – PCIe 2.0 & PCIe 5.0

- PCIe 2.0
  - Common Clock model CDR has little rejection at 33 KHz and up to 2 MHz.
  - Reference Clock jitter limit large (3.1 ps RMS for 5.0 Gt/s PCIe).
  - Significant ability to trade off data and clock jitter at platform level
  - Significant savings from conservative assumptions of standalone clock test (min/max pll bandwidths and worst case phase mismatch)
  - Application of reference clock to compute data jitter straightforward (no reference equalizer)
- PCIe 5.0
  - Common Clock model CDR same as SRIS CDR and has lot of rejection at 33 KHz and up to 2 MHz
  - Reference Clock jitter limit very small (.15 ps RMS). No ability to trade off at platform level
  - Many high speed receiver designs do not use reference clock
  - Application of clock to compute data jitter is not straightforward. (reference receiver with CTLE and DFE and specific time domain CDR definition)
  - High speed oscilloscope channels are expensive

PCIe Gen 5 TX CEM

DUAL PORT TESTING REMOVAL

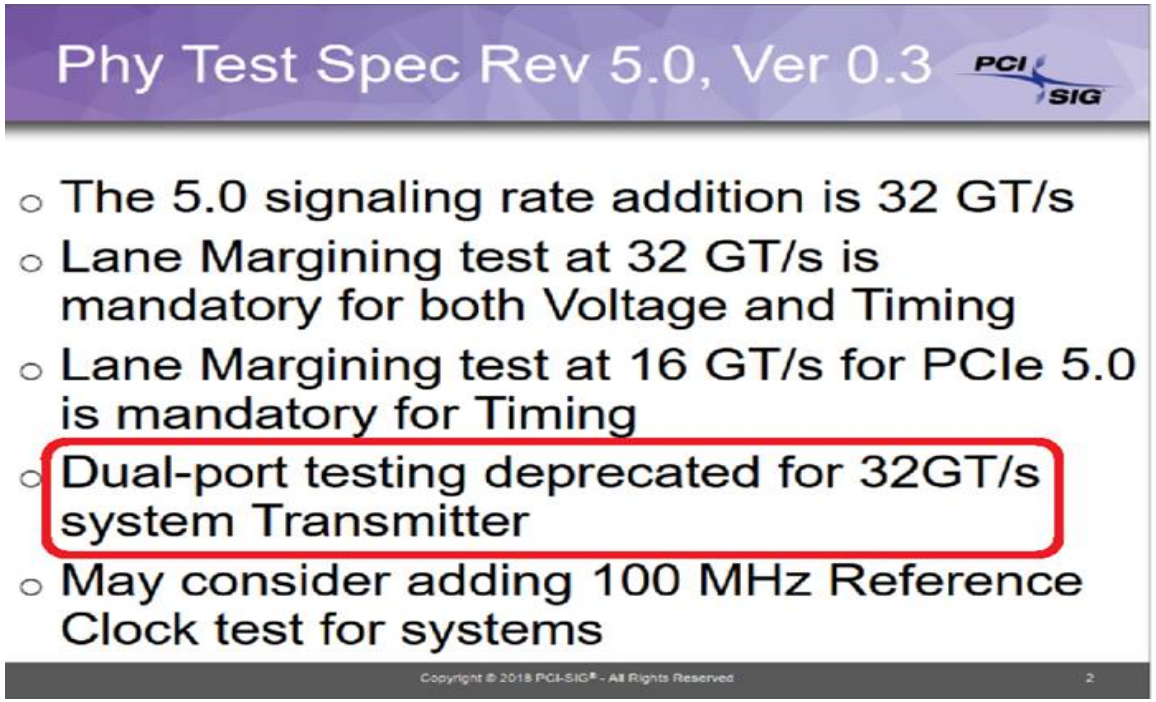

- CEM workgroup voted in March 2020 to remove the Dual Port Requirement for 5.0 System Tx requirement
- Workgroup exploring a new 5.0 System refclk jitter compliance test
- Systems at 32 GT/s will be tested with the same CDR & reference Rx EQ algorithms as 32 GT/s Add-in Cards
- Only 2 scope channels needed!

PCI Express Proposed CEM Tx Eye Mask

	PCIe 5.0 Base Spec Eye Limits	CEM 5.0 Eye Limits
System TX	EH=15mV	17.5mV (2.5mV↑)
	EW=0.3UI, 9.375ps	0.31 UI, 9.688 ps (1%UI↑)
AIC TX	EH=15mV	22 mV (7mV↑)
	EW=0.3UI, 9.375ps	0.34 UI, 10.625 ps (4 %UI↑)

Tektronix Gen5 Tx Solution Status

- PCI Express 5.0 Base Tx – !!Released Q1 2020!!
- PCI Express 5.0 CEM Tx – Target First Release Q2 2020 (coming soon)
  - Currently no Gen5 CEM compliance fixtures available
    - Not expected to be broadly available from the PCI-SIG till Q3/Q4 2020

Key features – Gen5 Base Tx Release

BASE SPEC

- TekExpress PCIe Base Spec TX Software
  - PCIe Base spec Gen5 solution over DPO70000SX Series with ATI 2 stack (BW > 50GHz)
  - Backward compatibility support for Gen1-4 over Non-ATI channel
  - Updated UI for DUT panel
  - Support for Reduced Swing and Full Swing
  - Base Tx Jitter & Voltage measurement support with SigTest 4.0.51
  - Preset test using Sigtest V4.0.51
  - De-embedding support for single ended waveforms
  - Semi Automated Deskew support using Deskew tool from Tekscope
  - Documentation with updated schematics for gen 5 (.chm/pdf)
  - Updated TekExpress report with ATI channel and SSC Status information
- DPOJET plugin w/Gen5 Base Spec measurements for debugging/characterization
- DPOJET setup files for ease of debugging
- MOI updates for DPOJET measurements
- Refclk measurement as DPOJET Plugin for Common Clock

PCI Express 5.0
32GT/s Rx PG Calibration & Test

32GT/s Rx Calibration

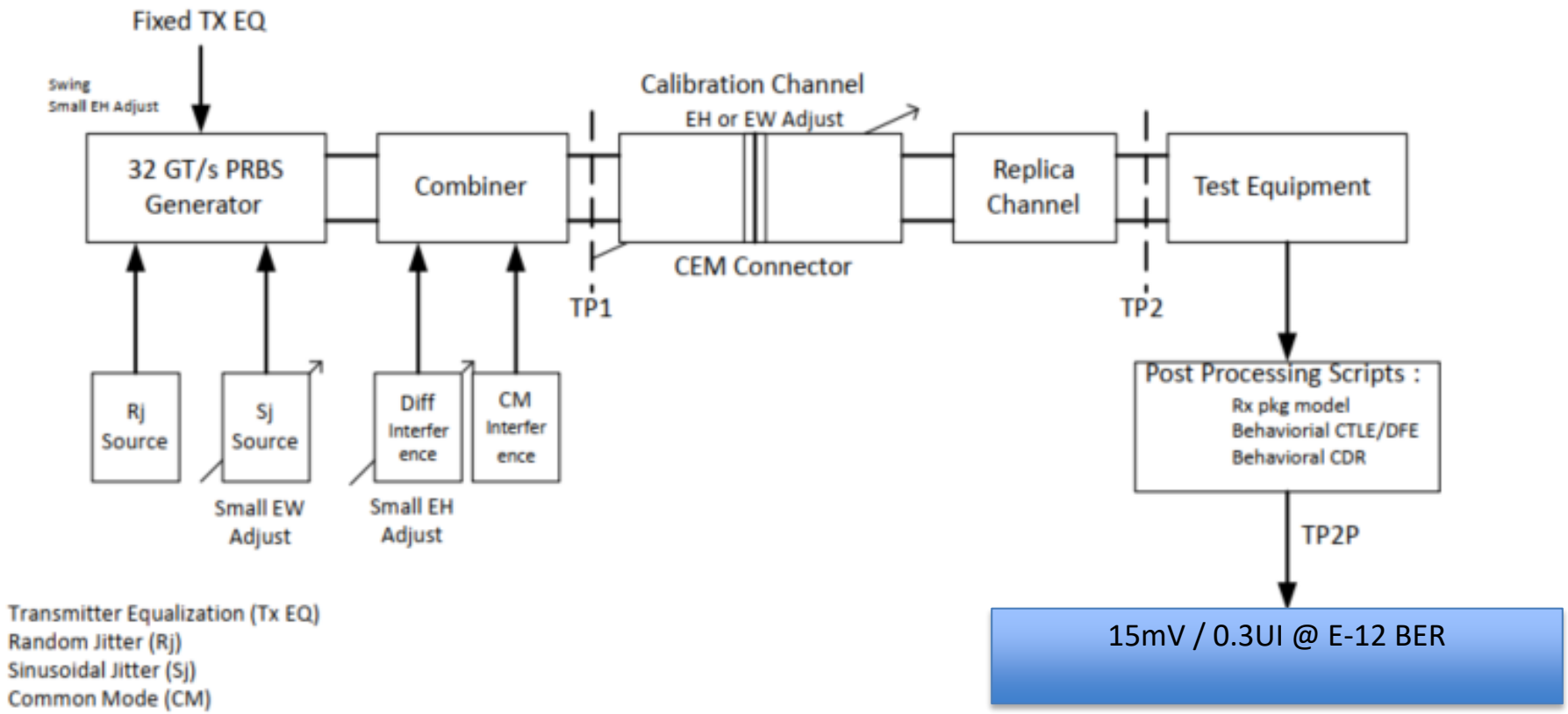

Transmitter Equalization (Tx EQ)
Random Jitter (Rj)
Sinusoidal Jitter (Sj)
Common Mode (CM)
Eye Width (EW)
Eye Height (EH)
Test Point (TP)

Copyright © 2019 PCI-SIG® - All Rights Reserved

Rx Calibration Evolution

8GT/s Rx Calibration

- Fixed Channel Loss (package embedded with SigTest)
- Knobs – Rj/DMI (often results in unrealistic Rj values – no bounds)
- Only CEM fixtures for sale through PCI-SIG
- Seasim (Base) & SigTest (CEM)

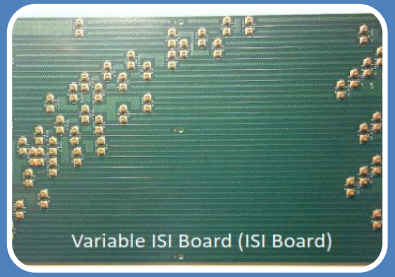

16GT/s Rx Calibration

- Variable ISI (27 to 30dB) – improved test equipment correlation
- Knobs – Amplitude/Sj/DMI (with allowable ranges defined)
- Limit BASE fixtures for sale through PCI-SIG & implementation note in BASE Spec
- Seasim/SigTest (Base) & SigTest (CEM)

32GT/s Rx Calibration

- Variable ISI (34 to 37dB)
- Knobs – Same as 16GT/s
- Base Rev2 fixtures under development (MMPX coaxial connector)
- Seasim (Base) –& SigTest EH Extrapolation under investigation & noise impact

Copyright © 2019 PCI-SIG® - All Rights Reserved

Rx Test Points

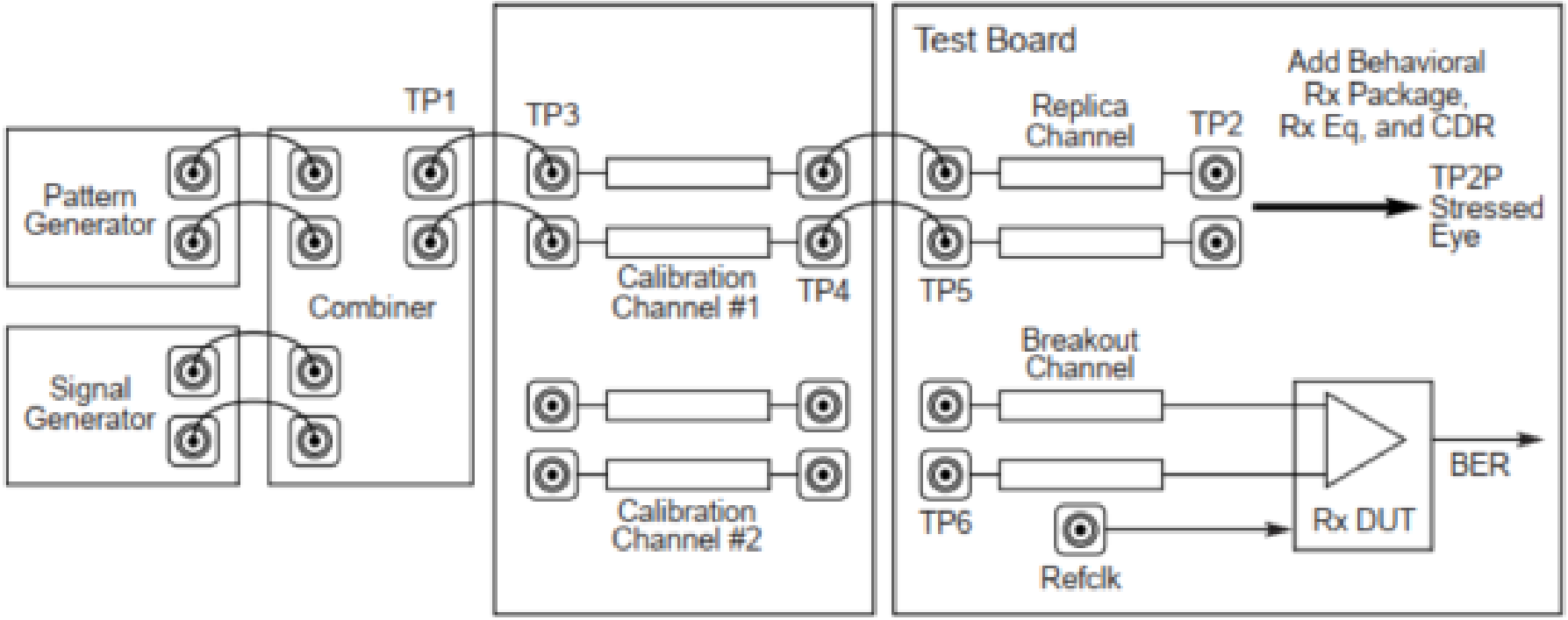

Copyright © 2019 PCI-SIG® - All Rights Reserved

Points of Clarification

Channel Selection

- Select channel between 27 & 30dB for Gen4 and 34 & 37dB for Gen5
- Preset is selected which gives the largest EA with the optimal CTLE
- CTLE varied in 1/4dB steps for 16GT/s and 1dB steps for 32GT/s

TP1 Cable

- TP1 is the output of the signal generator & TP3 is after the first coaxial cable
- At 16GT/s the cable between TP1 & TP3 is considered part of the calibration channel
- At 32GT/s the cable is considered part of the generator and not included in the loss

Tie Breakers

- **16GT/s**: 1st - pick the combination of Sj/DMI/Swing which gets closest to the EW target; 2nd - choose the combination with Sj closest to the nominal value
- **32GT/s**: 1st – pick the combination with the highest channel loss; 2nd – choose the combination closest to the target EH

Copyright © 2019 PCI-SIG® - All Rights Reserved

New Guidelines from Intel & AMD Released

1. Seasim version – v0.78
2. Seasim Settings
3. BERT settings
   a) Rj LPF and HPF filter settings (10-1000MHz)
   b) Step response settings: clock/512.
   c) Enable all stress sources, but set to 0 (if supported by instrument)
   d) Calibrated Tx Presets and Vswing are set by the BERT, all other stresses (Sj, DMI and Rj) are set in Seasim
4. Scope settings
   a) Scope bandwidth for TP2P calibration set to 33GHz
   b) Averaging set to 1024x
   c) Vertical scale set in order to maximize the dynamic range of the ADC of the scope
   d) Time scale per division: 800ps/div – (rising edge positioned as shown on slide #6)
5. Other guidelines:
   a) Intrinsic Pwddj and pwRj from the transmitter needs to be measured and set in Seasim configuration file (more details on the next slide)
   b) DMI conversion factor between Seasim and Rx DUT
   c) For highest accuracy, channel loss measurements to be taken with VNA
   d) Channel loss measured from TP3 (end of BERT cable) to TP2

Simulation Method Conversion Factor

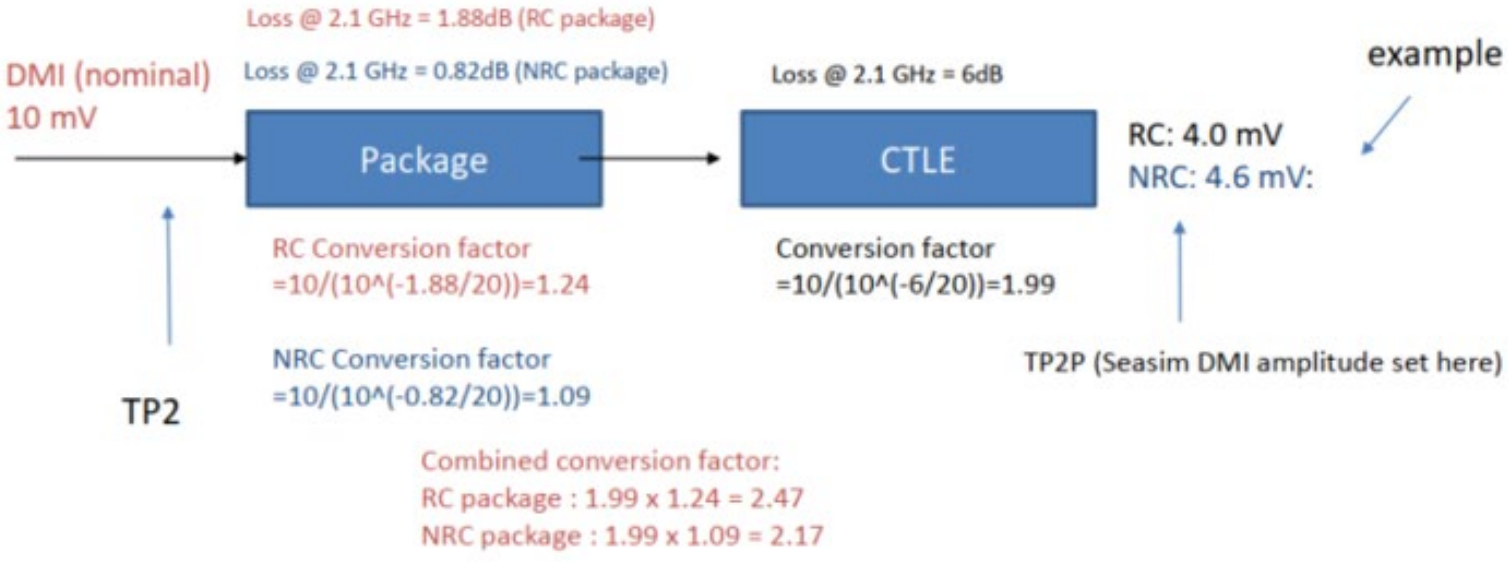

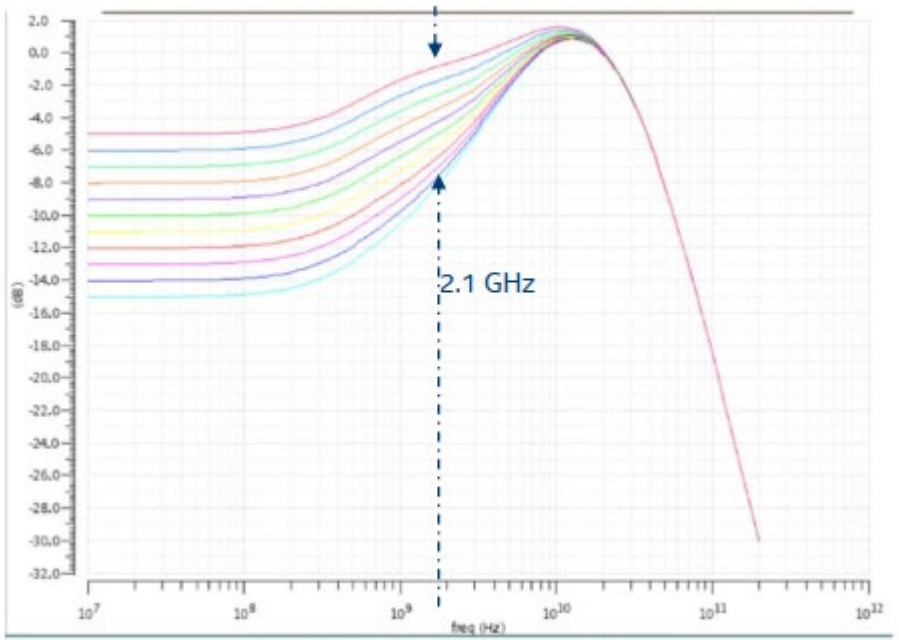

(Nominal DMI value based on PCIe 5.0 Rev 0.7 spec)

NEW

CTLE Curve	-15	-14	-13	-12	-11	-10	-9	-8	-7	-6	-5
Loss @ 2.1 GHz	-7.1656	-6.74485	-6.26725	-5.73227	-5.14069	-4.49494	-3.79846	-3.05574	-2.27145	-1.45083	-0.59882
CTLE conversion Factor	2.281813	2.173915	2.057607	1.934699	1.807318	1.677826	1.548542	1.421631	1.29889	1.181793	1.071374
RC Package Conversion Factor	1.24	1.24	1.24	1.24	1.24	1.24	1.24	1.24	1.24	1.24	1.24
NRC Pacakge Conversion Factor	1.09	1.09	1.09	1.09	1.09	1.09	1.09	1.09	1.09	1.09	1.09
DMSI Conversion Factor RC package	2.829448	2.695654	2.551433	2.399027	2.241074	2.080505	1.920192	1.762823	1.610624	1.465424	1.328503
DMSI Conversion Factor NRC package	2.487176	2.369567	2.242792	2.108822	1.969976	1.828831	1.687911	1.549578	1.415791	1.288155	1.167797

Copyright © 2019 PCI-SIG® - All Rights Reserved

Other Considerations

- **Replica Channel & Package Embedding**
  - Physical replica channel
    - Additional impedance discontinuities
    - Cable de-embedding required
  - Cascaded filter for replica channel & package model
    - Less reflective channel
    - No complex de-embedding needed
- **CTLE AC/DC Gain Step Size**
  - ¼ dB step sized required for correlation at 16GT/s
  - Currently only 1 dB explored at 32GT/s

Copyright © 2019 PCI-SIG® - All Rights Reserved

Gen5 Base Calibration (11/5/2019)

- Channel – Gen5 Base Rx Calibration Fixtures – Rev3
  - Pair 15 & 8” replica (~36dB) – Full physical
- Optimal Tx EQ – Preset 6
- Final Sj – 3.5ps (0.375ps above nominal)
- Final DMI – 12.35mV TP2 (2.35mV above nominal)
- Final Eye Width – 9.5ps
- Final Eye Height – 16.2mV

	EH (mV)	EW (ps)
P0	4.9	3.2
P1	10.5	6.1
P2	6.5	4.0
P3	11.1	6.6
P4	8.4	4.5
P5	9.5	6.4
P6	17.5	10.2
P7	6.8	5.0
P8	9.1	6.7
P9	11.9	7.7

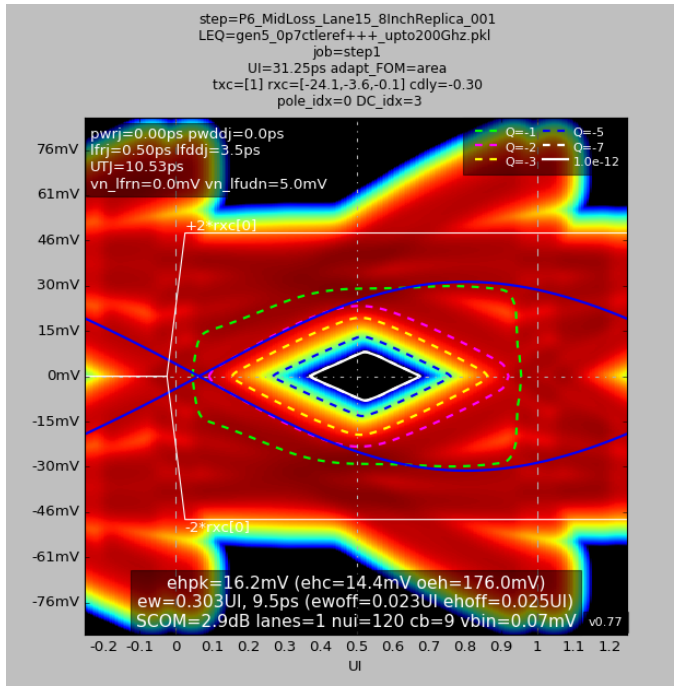

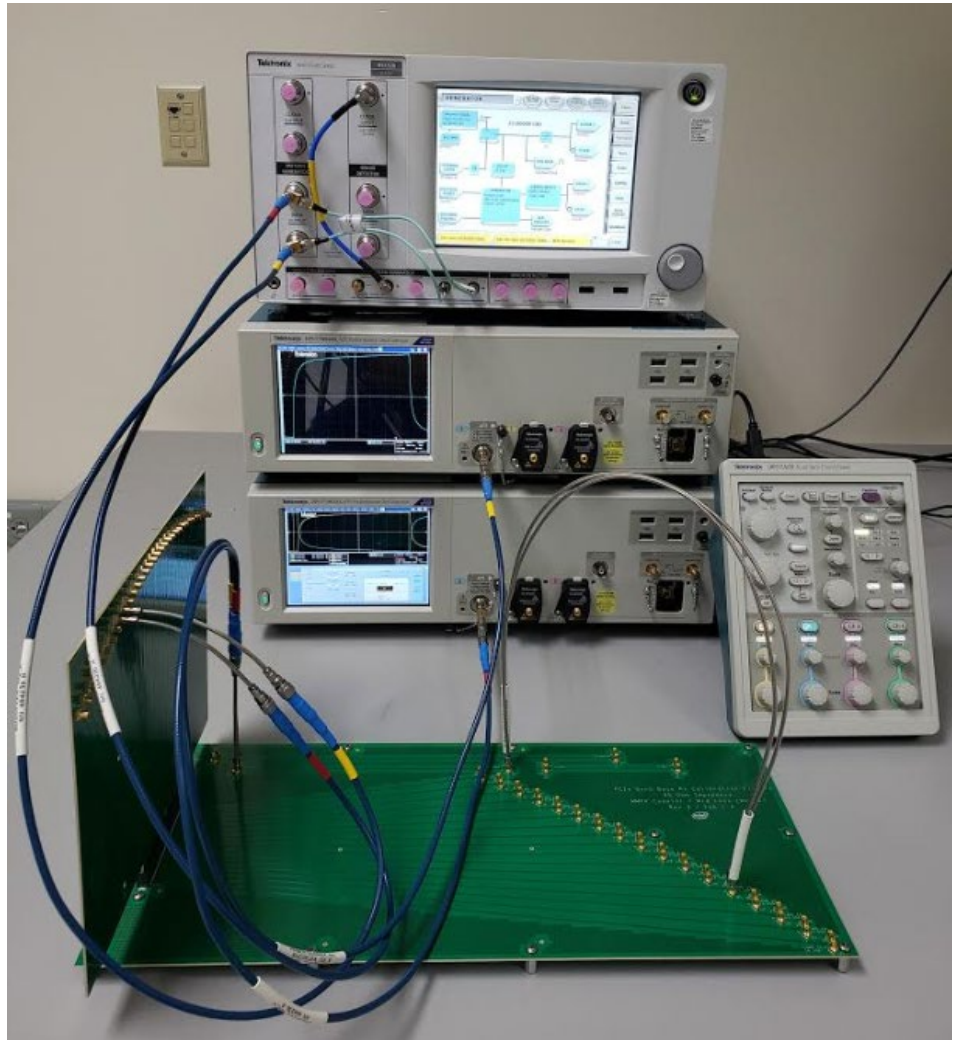

PCI Express 5.0 Refclk Jitter Measurements

Reference Clock Phase Jitter Test

PLL #1	0.01 dB peaking	2.0 dB peaking
$BW_{PLL}(min) = 2.0$ MHz	$\omega_{n1} = 0.448$ Mrad/s, $\zeta_1 = 14$	$\omega_{n1} = 6.02$ Mrad/s, $\zeta_1 = 0.73$
$BW_{PLL}(max) = 4.0$ MHz	$\omega_{n1} = 0.896$ Mrad/s, $\zeta_1 = 14$	$\omega_{n1} = 12.04$ Mrad/s, $\zeta_1 = 0.73$

PLL #2	0.01 dB peaking	1.0 dB peaking
$BW_{PLL}(min) = 2.0$ MHz	$\omega_{n2} = 0.448$ Mrad/s, $\zeta_2 = 14$	$\omega_{n2} = 4.62$ Mrad/s, $\zeta_2 = 1.15$
$BW_{PLL}(max) = 5.0$ MHz	$\omega_{n2} = 1.12$ Mrad/s, $\zeta_2 = 14$	$\omega_{n2} = 11.53$ Mrad/s, $\zeta_2 = 1.15$

$BW_{CDR}(min) = 10$ MHz, 1st order

64 combinations

8.0, 16.0 GT/s

Ref CLK requirements for PCIe 5.0 have become more stringent and testing methodologies have changed

Table 8-22: Jitter Limits for CC Architecture

Data Rate	CC jitter Limit	Notes
2.5 GT/s	86 ps pp	1, 2
5.0 GT/s	3.1 ps RMS	1, 2
8.0 GT/s	1.0 ps RMS	1, 2
16.0 GT/s	≤ 0.5 ps RMS	1, 2, 3, 4

Notes:

1. The Refclk jitter is measured after applying the filter function in Figure 8-57
2. Jitter measurements shall be made with a capture of at least 100,000 clock cycles captured by a real time oscilloscope with a sample rate of 20 GS/s or great. Broadband oscilloscope noise must be minimized ir measurement. The measured PP jitter is used (no extrapolation).
3. For the 16.0 GT/s CC measurement SSC spurs from the fundamental and harmonics are removed up to a frequency of 2 MHz taking care to minimize removal of any non-SSC content.
4. Note that 0.7 ps RMS is to be used in channel simulations to account for additional noise in a real system.

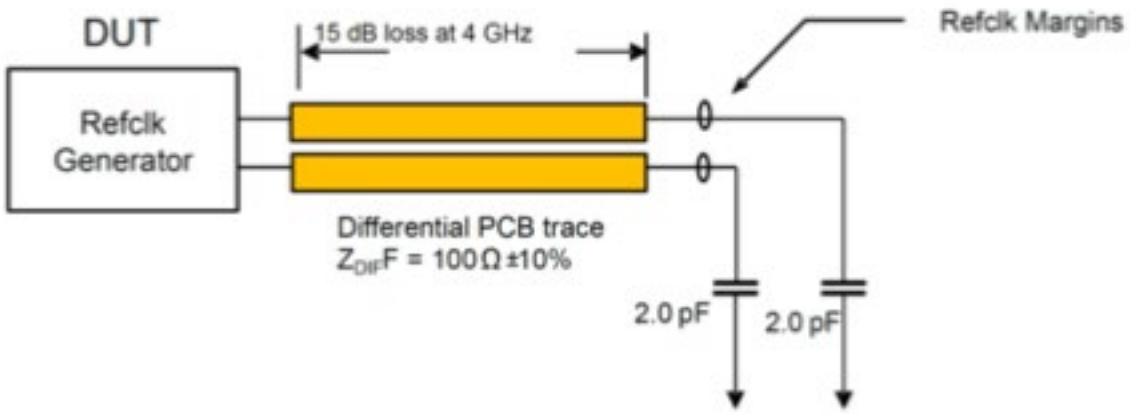

Experiment Setup

Gen5 Refclk
Eval Board

PCIe Gen5 Base
Rx Calibration Fixtures (Rev 3)

Tektronix RT Scope
(DPS77004SX)

DMI

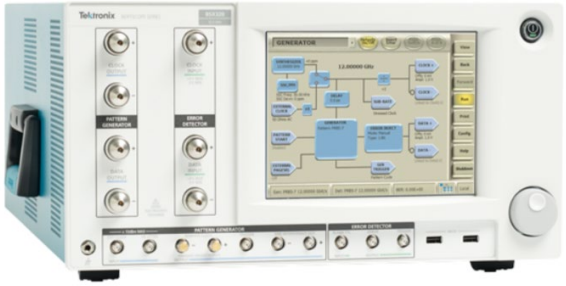

PCI SIG CEM Presentation

- Results from Refclk experiment shared in the CEM workgroup to provide guidance for new 5.0 System refclk jitter compliance test
- Base spec pathfinding simulations used 250fs refclk jitter
  - Extra 100fs jitter added from base spec limit
    - Crosstalk
    - Edge flattening – vertical noise to jitter conversion
- All cases showed less than 250fs jitter including 30dB channel with noise added and SSC enabled
- Experiment to be repeated with worse case refclk (150fs)

Tektronix – PCI Express 5.0 Refclk Solution (under development)

- Fully Automated solution – TekExpress
- Expected Q2/Q3 2020
- Targeted Support
  - High Frequency Jitter Measurements (Gen1 to Gen5)
    - Optional scope Noise removal algorithm
  - Refclk DC Specifications and AC Requirements
  - Data Rate Independent Refclk Parameters
- Real Time Scopes
  - DPS77004SX
  - DPS5002SX
  - MSO64

Questions