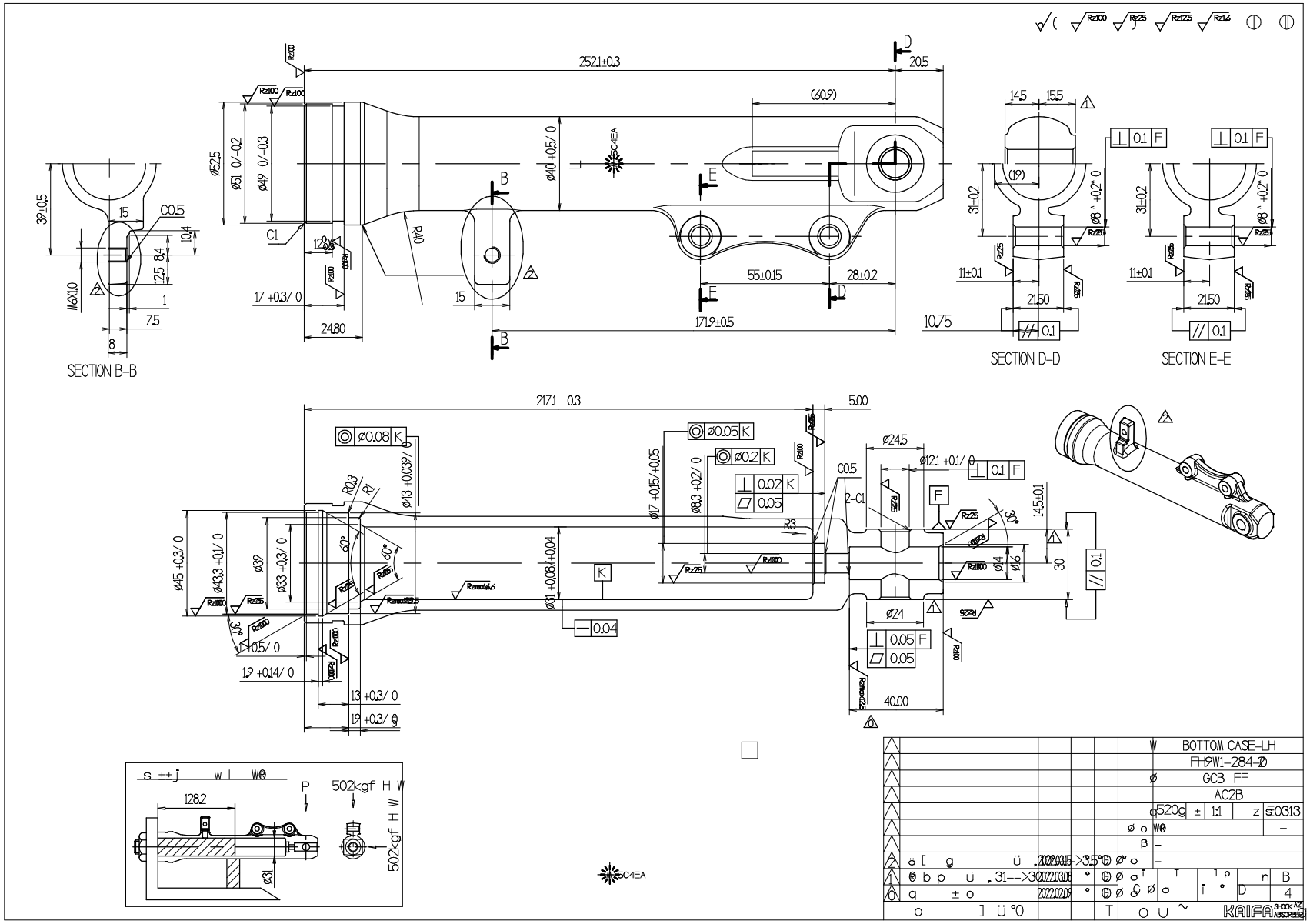

Y
X

Gview:TOP WCS:TOP T/Cplane:TOP

63.032
Metric