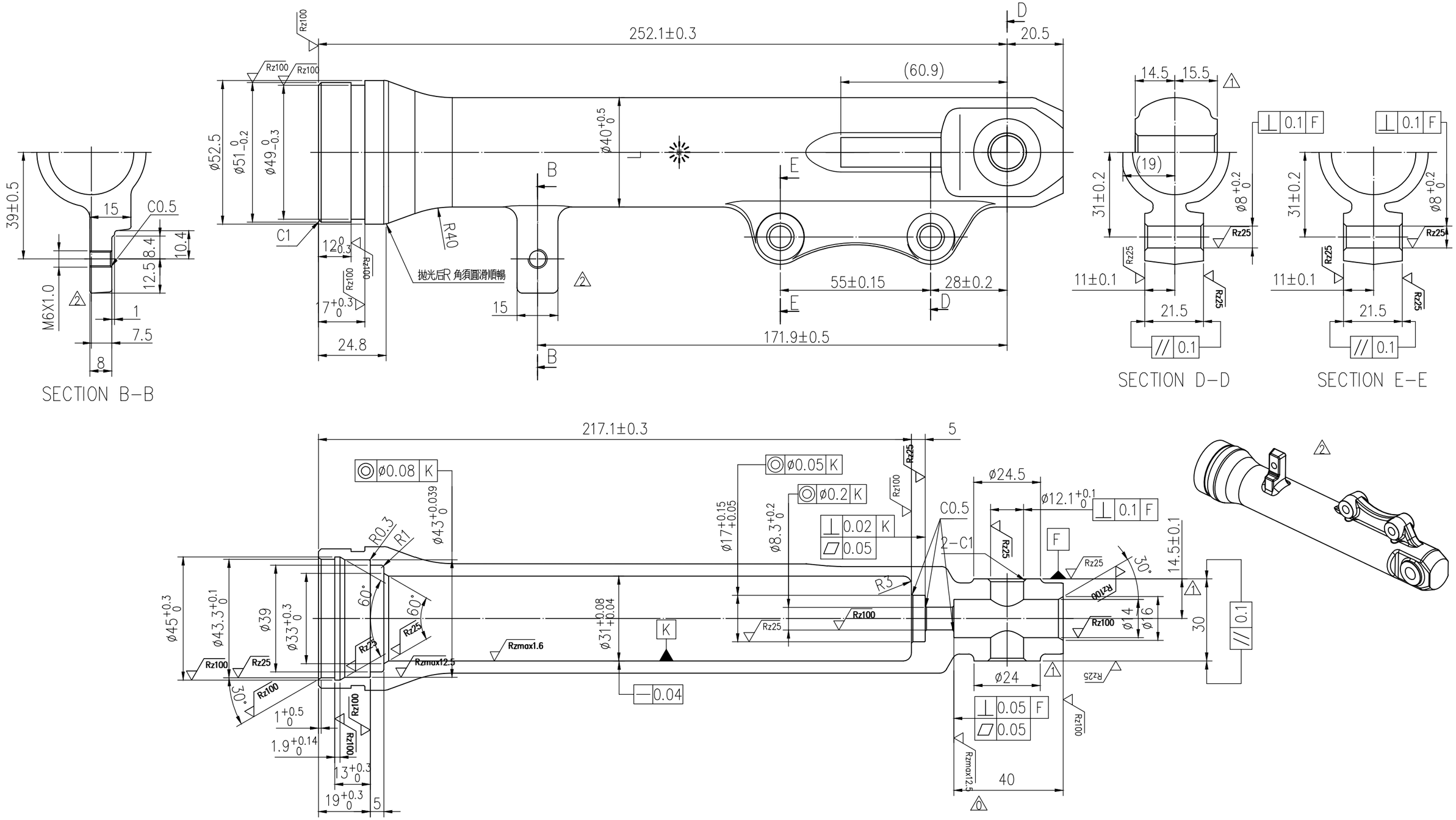
252.1±0.3
20.5
(60.9)
Rz100
ø52.5
ø51 0 -0.2
ø49 0 -0.3
ø40 +0.5 0
L
B
E
D
R40
C1
12 0 -0.3
7 +0.3 0
24.8
15
拋光后R 角須圓滑順暢
55±0.15
28±0.2
171.9±0.5
39±0.5
15
C0.5
8.4
10.4
12.5
M6X1.0
1
7.5
8
SECTION B-B
14.5
15.5
(19)
31±0.2
ø8 +0.2 0
Rz25
11±0.1
21.5
0.1 F
0.1
SECTION D-D
SECTION E-E
217.1±0.3
5
ø0.08 K
ø43 +0.039 0
R0.3
R1
60°
30°
ø45 +0.3 0
ø43.3 +0.1 0
ø39
ø33 +0.3 0
Rzmax1.6
Rzmax12.5
ø31 +0.08 +0.04
0.04
ø0.05 K
ø17 +0.15 +0.05
ø8.3 +0.2 0
ø0.2 K
0.02 K
0.05
R3
2-C1
ø24.5
ø12.1 +0.1 0
F
14.5±0.1
ø14
ø16
30
ø24
0.05 F
40
1 +0.5 0
1.9 +0.14 0
13 +0.3 0
19 +0.3 0