Lab 1: Complete Lab-Focused Teaching Package

[Lab1_673380279-7](#) ←– file lab

นายปองภพ ศรีรักษ์ 673380279-7 sec.2

📊 TOPOLOGY DIAGRAM

None

```
                    192.168.1.1/24
              [G0/0]--[Router]--[G0/1] (Unused)
                          |
                          |
                   [Gig0/1] (Switch Port)
                          |
              [Switch] (VLAN 1: 192.168.1.2/24)
                   /              \
                  /                \
           [Fa0/1]                [Fa0/2]
              |                      |
              |                      |
        [PC1]                      [PC2]
192.168.1.10/24          192.168.1.11/24
GW: 192.168.1.1          GW: 192.168.1.1
```

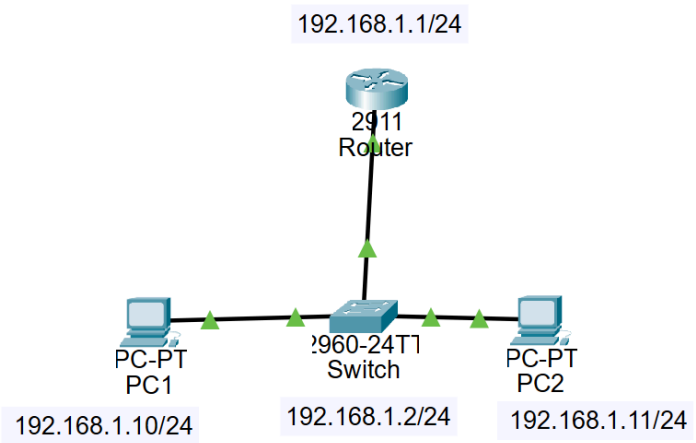

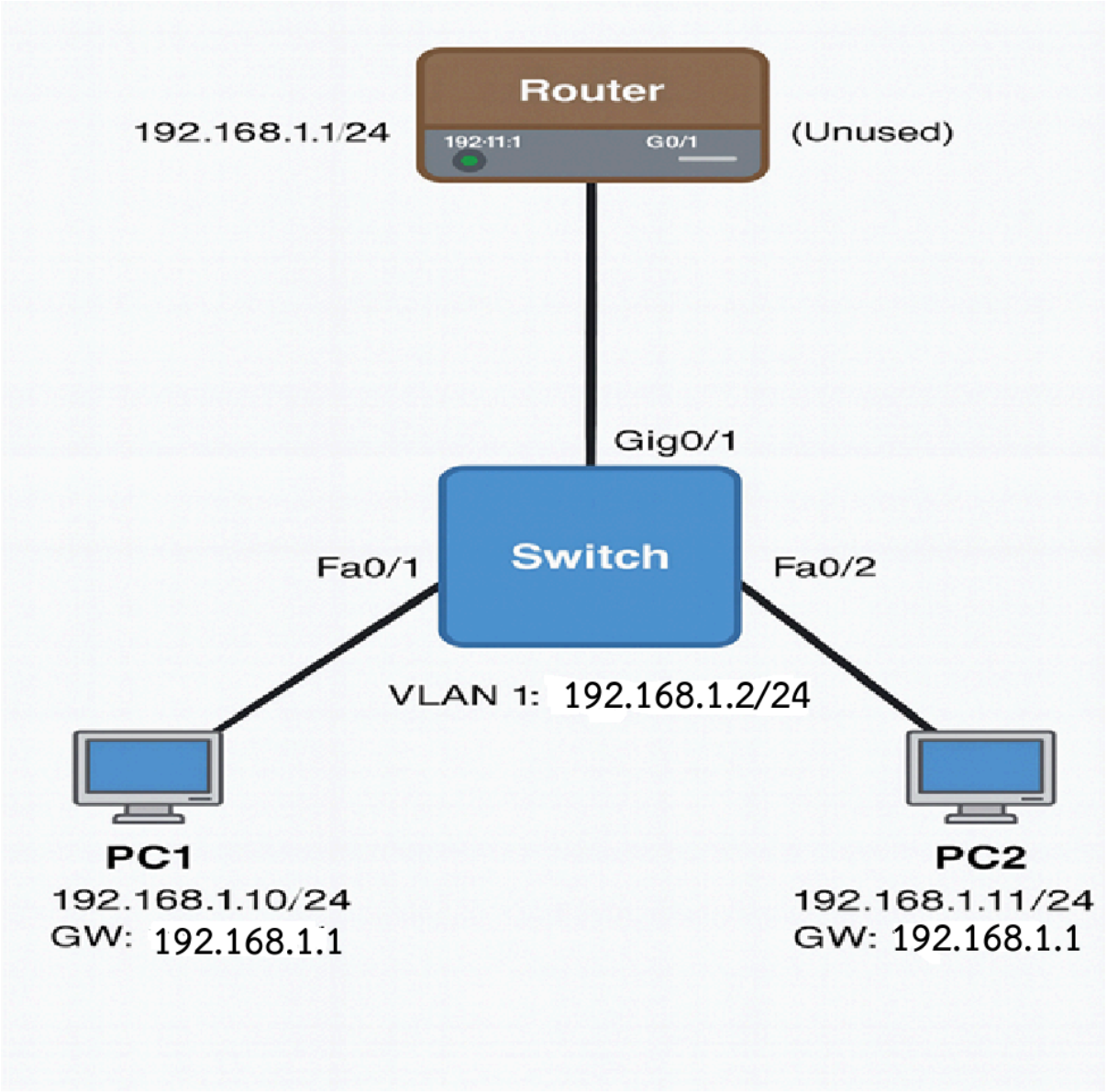
Router
192.168.1.1/24
192.11.1
G0/1
(Unused)
Gig0/1
Switch
Fa0/1
Fa0/2
VLAN 1: 192.168.1.2/24
PC1
192.168.1.10/24
GW: 192.168.1.1
PC2
192.168.1.11/24
GW: 192.168.1.1

📋 ADDRESSING TABLE

Device	Interface	IP Address	Subnet Mask	Default Gateway	MAC (Dynamic)
R1	G0/0	192.168.1.1	255.255.255.0	N/A	0001.9643.AC01
S1	VLAN 1	192.168.1.2	255.255.255.0	192.168.1.1	0002.1745.8B02
PC1	NIC	192.168.1.10	255.255.255.0	192.168.1.1	0050.7966.6803
PC2	NIC	192.168.1.11	255.255.255.0	192.168.1.1	0090.2B14.7C04

Network: 192.168.1.0/24
Usable Host Range: 192.168.1.1 - 192.168.1.254
Broadcast: 192.168.1.255

🎯 LAB OBJECTIVES

- **Part 1:** Configure basic device addressing (R1, S1, PC1, PC2)
- **Part 2:** Verify connectivity and observe encapsulation
- **Part 3:** Analyze protocol headers using simulation
- **Part 4:** Troubleshoot layered connectivity issues
- **Part 5:** Document protocol interactions

🔧 LAB INSTRUCTION STEPS

PART 1: DEVICE CONFIGURATION (30 minutes)

Step 1: Router Configuration

```
None
Router> enable
Router# configure terminal
Router(config)# hostname R1
```

```
R1(config)# interface gigabitEthernet 0/0
R1(config-if)# ip address 192.168.1.1 255.255.255.0
R1(config-if)# no shutdown
R1(config-if)# description LINK_TO_SWITCH_S1
R1(config-if)# exit
R1(config)# ip route 0.0.0.0 0.0.0.0 null0  ! Static default route for
completeness
R1(config)# end
R1# copy running-config startup-config
```

Router

Physical Config CLI Attributes

IOS Command Line Interface

```
Router>enable
Router#configure terminal
Enter configuration commands, one per line.  End with CNTL/Z.
Router(config)#hostname R1
R1(config)#interface gigabitEthernet 0/0
R1(config-if)#ip address 192.168.1.1 255.255.255.0
R1(config-if)#no shutdown

R1(config-if)#
%LINK-5-CHANGED: Interface GigabitEthernet0/0, changed state to up

%LINEPROTO-5-UPDOWN: Line protocol on Interface GigabitEthernet0/0, changed state to up

R1(config-if)#description LINK_TO_SWITCH_S1
R1(config-if)#exit
R1(config)#ip route 0.0.0.0 0.0.0.0 null0  ! Static default route for completeness
                                           ^
% Invalid input detected at '^' marker.

R1(config)#ip route 0.0.0.0 0.0.0.0 null0  | Static default route for completeness
                                           ^
% Invalid input detected at '^' marker.

R1(config)#ip route 0.0.0.0 0.0.0.0 null0
%Default route without gateway, if not a point-to-point interface, may impact performance
R1(config)#end
R1#
%SYS-5-CONFIG_I: Configured from console by console

R1#copy running-config startup-config
Destination filename [startup-config]?
Building configuration...
[OK]
R1#
```

Step 2: Switch Configuration

```
None
Switch> enable
Switch# configure terminal
Switch(config)# hostname S1
S1(config)# interface vlan 1
S1(config-if)# ip address 192.168.1.2 255.255.255.0
S1(config-if)# no shutdown
S1(config-if)# exit
S1(config)# ip default-gateway 192.168.1.1
S1(config)# interface range fastEthernet 0/1-2
S1(config-if-range)# switchport mode access
S1(config-if-range)# switchport access vlan 1
S1(config-if-range)# no shutdown
S1(config-if-range)# exit
S1(config)# end
S1# copy running-config startup-config
```

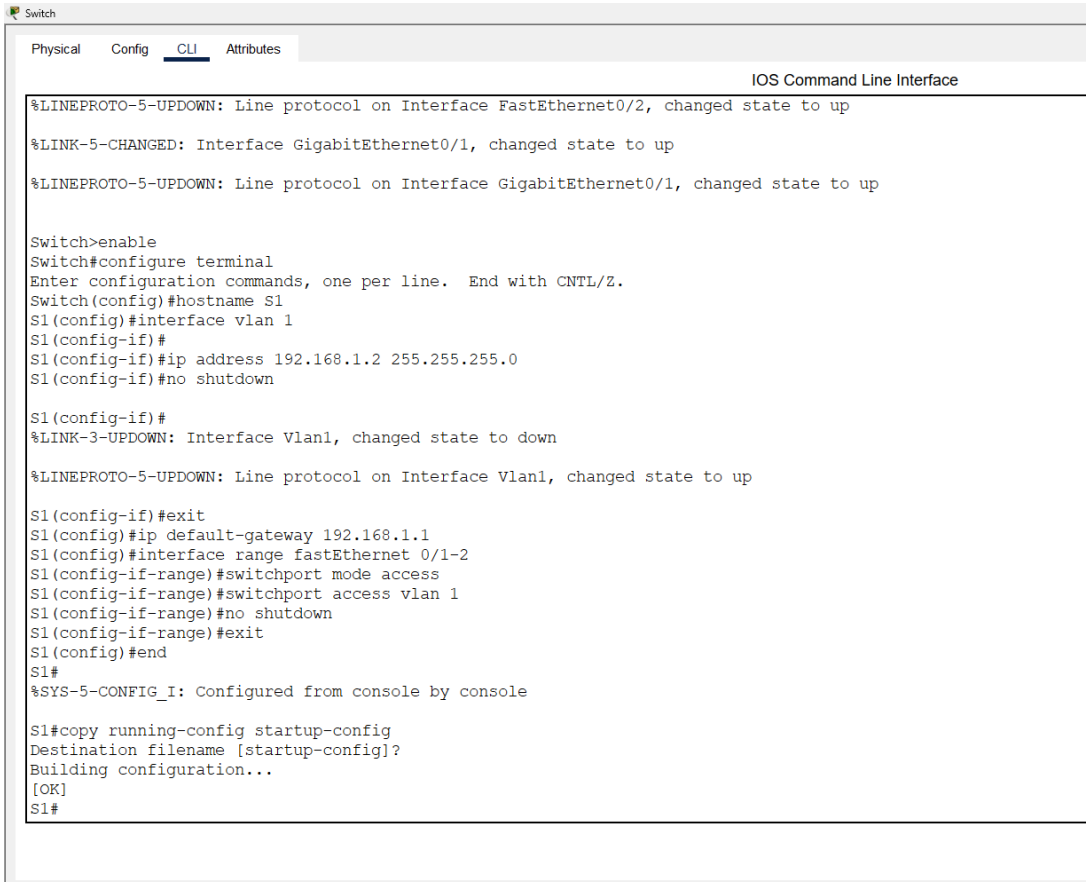

Step 3: PC Configuration

PC1:

- IP Address: 192.168.1.10
- Subnet Mask: 255.255.255.0
- Default Gateway: 192.168.1.1

เข้าไปที่ PC1>Desktop>IP Configuration

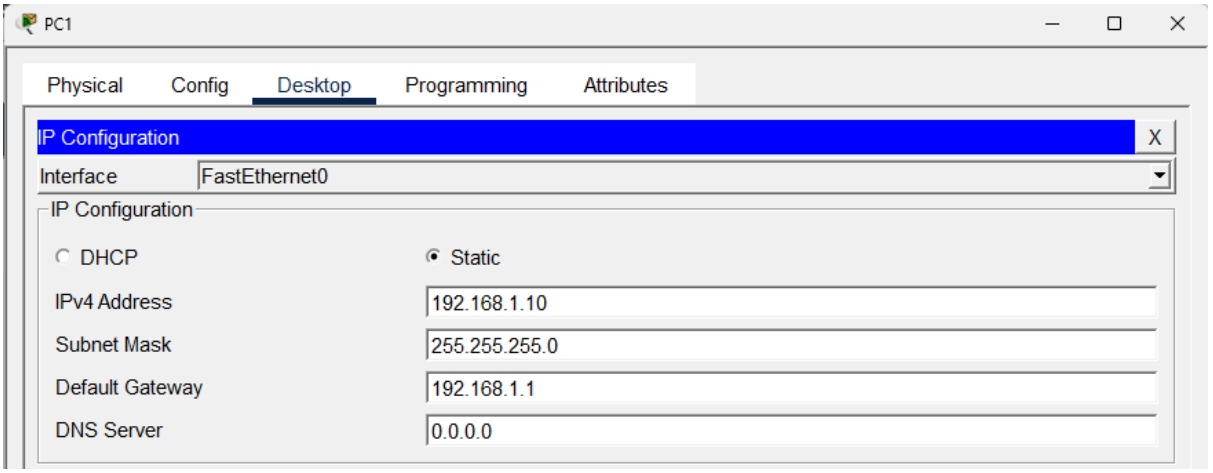

PC2:

- IP Address: 192.168.1.11
- Subnet Mask: 255.255.255.0
- Default Gateway: 192.168.1.1

เข้าไปที่ PC2>Desktop>IP Configuration

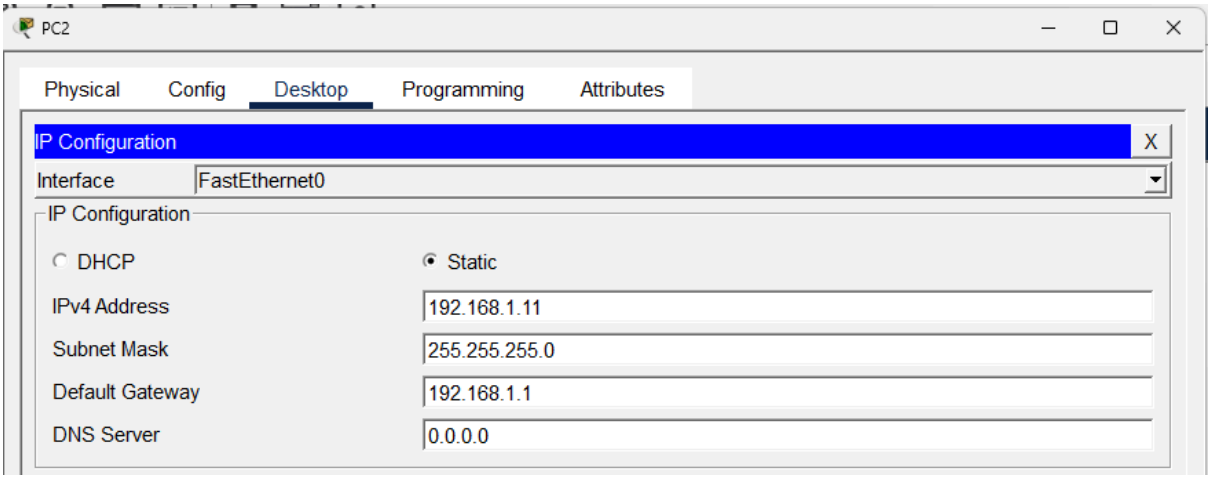

PART 2: CONNECTIVITY VERIFICATION (20 minutes)

Step 4: Basic Connectivity Tests

```
None
! From PC1 Command Prompt:
PC1> ping 192.168.1.11  ! Verify PC1 to PC2 connectivity
PC1> ping 192.168.1.1   ! Verify PC1 to R1 connectivity
PC1> ping 192.168.1.2   ! Verify PC1 to S1 connectivity

! From R1:
R1# show ip interface brief
! Verify G0/0 status: Protocol UP, Line Protocol UP
! IP address correctly assigned

! From S1:
S1# show vlan brief
! Verify VLAN 1 exists and ports Fa0/1-2 are assigned
S1# show mac address-table
! Observe MAC addresses learned on Fa0/1 and Fa0/2
```

เข้าไปที่ PC1>Desktop>Command Prompt

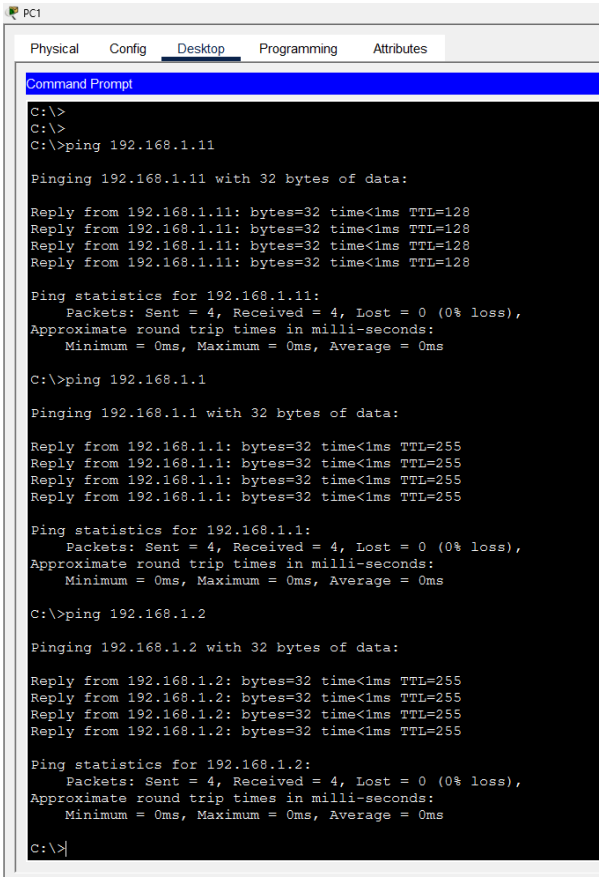

จะเห็นได้ว่า PC1 ping PC2, Switch, Router ได้

เข้าไปที่ Router>CLI

```
R1#show ip interface brief
Interface              IP-Address      OK? Method Status                Protocol
GigabitEthernet0/0     192.168.1.1     YES manual up                    up
GigabitEthernet0/1     unassigned      YES unset  administratively down down
GigabitEthernet0/2     unassigned      YES unset  administratively down down
Vlan1                  unassigned      YES unset  administratively down down
R1#
```

เข้าไปที่ Swithr>CLI

```
S1# show vlan brief

VLAN Name                             Status    Ports
---- -------------------------------- --------- -------------------------------
1    default                          active    Fa0/1, Fa0/2, Fa0/3, Fa0/4
                                                Fa0/5, Fa0/6, Fa0/7, Fa0/8
                                                Fa0/9, Fa0/10, Fa0/11, Fa0/12
                                                Fa0/13, Fa0/14, Fa0/15, Fa0/16
                                                Fa0/17, Fa0/18, Fa0/19, Fa0/20
                                                Fa0/21, Fa0/22, Fa0/23, Fa0/24
                                                Gig0/1, Gig0/2
1002 fddi-default                     active
1003 token-ring-default               active
1004 fddinet-default                  active
1005 trnet-default                    active
S1#
```

Step 5: ARP Table Examination

```
None
! From PC1 Command Prompt:
PC1> arp -a
! Record the ARP table entries
! Expected: 192.168.1.1 and 192.168.1.11 should appear with MAC addresses

! From R1:
R1# show arp
! Verify PC1 and PC2 MAC addresses are in ARP table
```

เข้าไปที่ PC1>Desktop>Command Prompt

```
C:\>arp -a
  Internet Address      Physical Address      Type
  192.168.1.1           00e0.b016.0401        dynamic
  192.168.1.2           00d0.ba54.76b1        dynamic
  192.168.1.11          0001.9679.834e        dynamic

C:\>
```

เข้าไปที่ Swithr>CLI

```
R1#show arp
Protocol  Address          Age (min)  Hardware Addr   Type   Interface
Internet  192.168.1.1            -    00E0.B016.0401  ARPA   GigabitEthernet0/0
Internet  192.168.1.10           5    0010.1152.91AC  ARPA   GigabitEthernet0/0
R1#
```

PART 3: ENCAPSULATION ANALYSIS (25 minutes)

Step 6: Packet Tracer Simulation Mode

1. Enter **Simulation Mode** in Packet Tracer
2. Create a **PDU** from PC1 to PC2 (ICMP Echo)
3. **Slow the simulation** and observe each step:

Observation Points:

- **Layer 2:** Ethernet frame construction (Source/Dest MAC)
- **Layer 3:** IP header creation (Source/Dest IP)
- **ARP Process:** How PC1 resolves PC2's MAC address
- **Switch Forwarding:** How S1 uses MAC table
- **Encapsulation/Decapsulation** at each hop

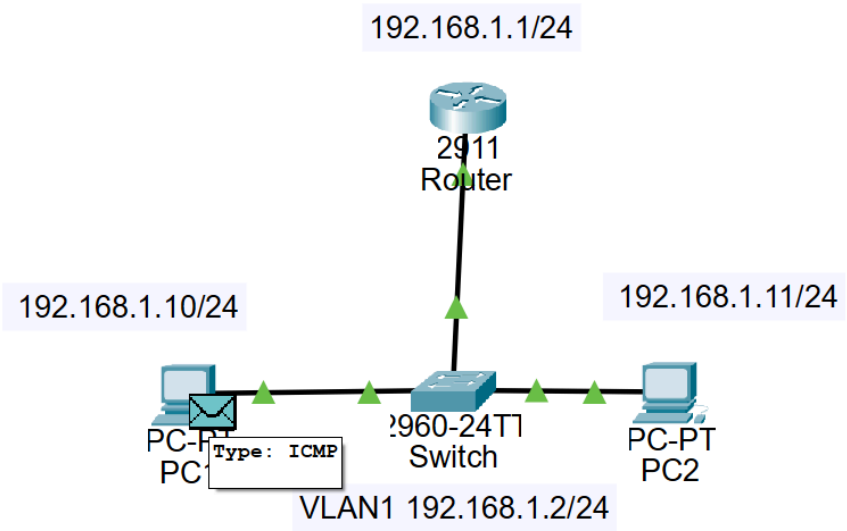

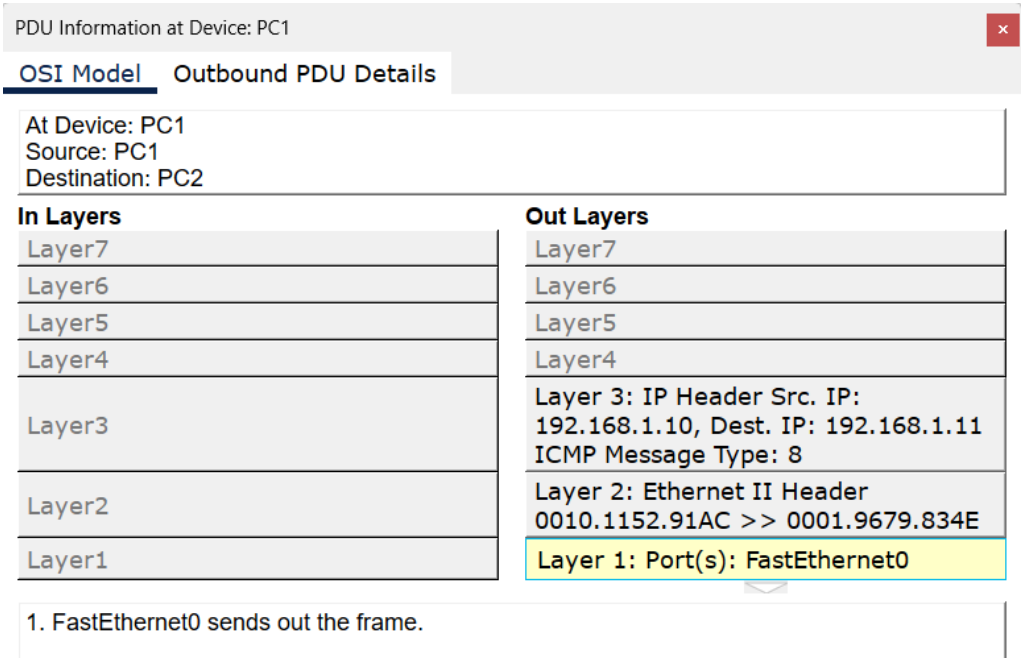

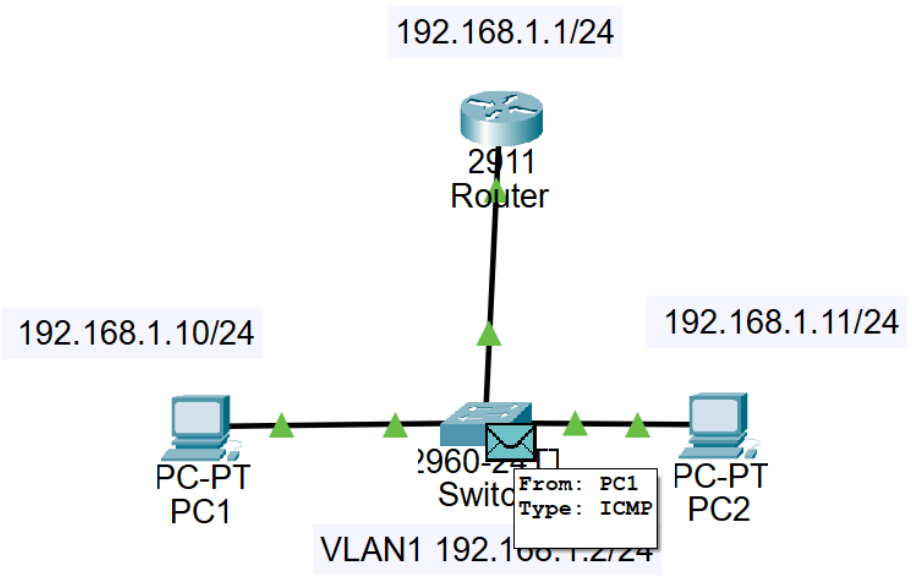

PDU Information at Device: Switch

OSI Model | Inbound PDU Details | Outbound PDU Details

At Device: Switch
Source: PC1
Destination: PC2

In Layers	Out Layers
Layer7	Layer7
Layer6	Layer6
Layer5	Layer5
Layer4	Layer4
Layer3	Layer3
Layer 2: Ethernet II Header 0010.1152.91AC >> 0001.9679.834E	Layer 2: Ethernet II Header 0010.1152.91AC >> 0001.9679.834E
Layer 1: Port FastEthernet0/1	Layer 1: Port(s): FastEthernet0/2 GigabitEthernet0/1

1. FastEthernet0/1 receives the frame.

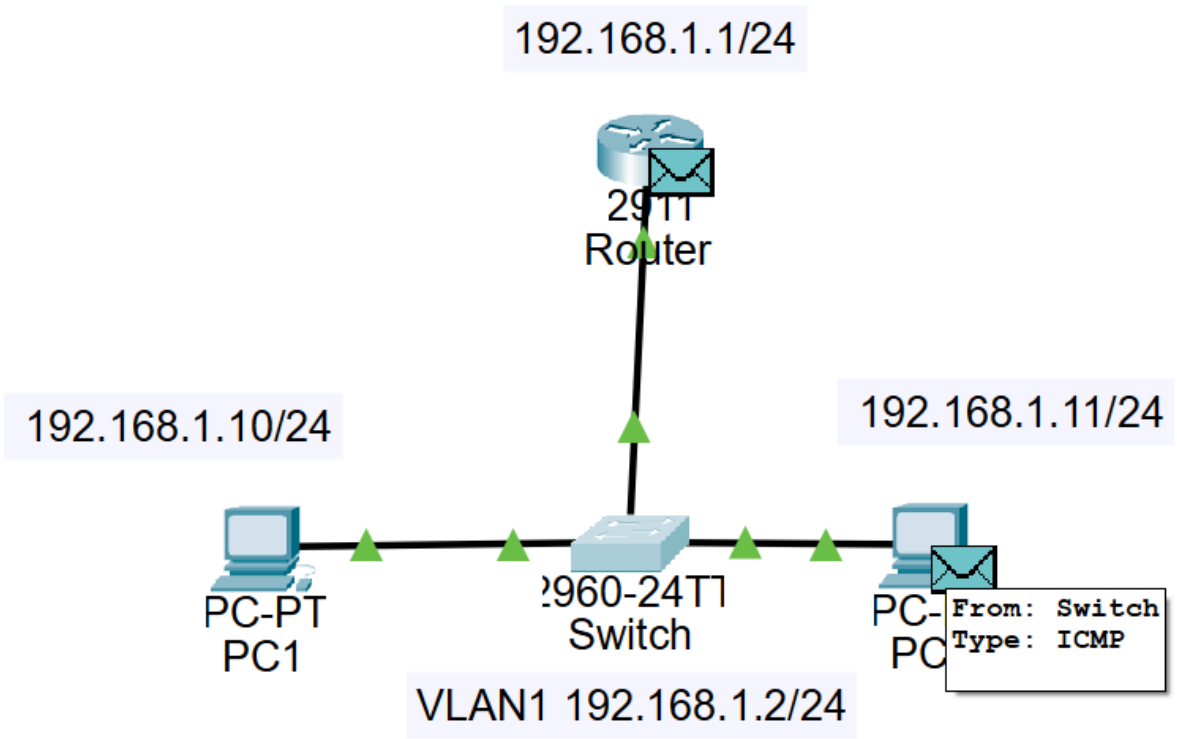

PDU Information at Device: PC2

OSI Model | Inbound PDU Details | Outbound PDU Details

At Device: PC2
Source: PC1
Destination: PC2

In Layers	Out Layers
Layer7	Layer7
Layer6	Layer6
Layer5	Layer5
Layer4	Layer4
Layer 3: IP Header Src. IP: 192.168.1.10, Dest. IP: 192.168.1.11 ICMP Message Type: 8	Layer 3: IP Header Src. IP: 192.168.1.11, Dest. IP: 192.168.1.10 ICMP Message Type: 0
Layer 2: Ethernet II Header 0010.1152.91AC >> 0001.9679.834E	Layer 2: Ethernet II Header 0001.9679.834E >> 0010.1152.91AC
Layer 1: Port FastEthernet0	Layer 1: Port(s): FastEthernet0

1. FastEthernet0 receives the frame.

Step 7: Protocol Header Documentation

Create this table in your lab report:

Step	Protocol	OSI Layer	TCP/IP Layer	Key Field Observed
1	ARP Request	Layer 2	Network Access	Target IP: 192.168.1.11
2	ARP Reply	Layer 2	Network Access	Sender MAC: 0001.9679.834E
3	ICMP Echo	Layer 3	Internet	Type: 8, Code: 0
4	Ethernet	Layer 2	Network Access	Frame Check Sequence: 0x00000000
5	ICMP Reply	Layer 3	Internet	Type: 0, Code: 0

PART 4: TROUBLESHOOTING CHALLENGE (25 minutes)

Step 8: Intentional Break-Fix Scenarios

Scenario A: Incorrect Subnet Mask

```
None
! On PC1, change to wrong subnet mask:
PC1> ipconfig /ip 192.168.1.10 255.255.0.0 192.168.1.1
! Attempt ping to PC2 - Observe failure
! Use 'arp -a' to diagnose
! Fix: Restore correct mask 255.255.255.0
```

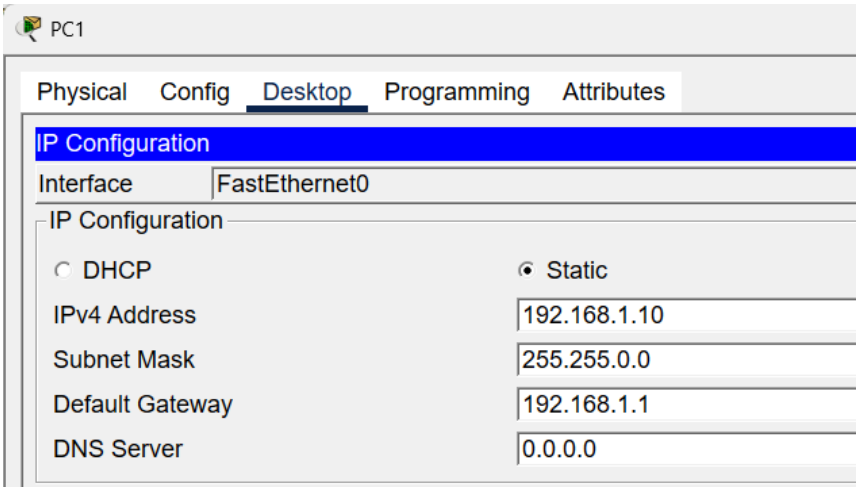


```
Pinging 192.168.1.11 with 32 bytes of data:

Reply from 192.168.1.11: bytes=32 time=9ms TTL=128
Reply from 192.168.1.11: bytes=32 time=4ms TTL=128
Reply from 192.168.1.11: bytes=32 time=4ms TTL=128
Reply from 192.168.1.11: bytes=32 time=4ms TTL=128

Ping statistics for 192.168.1.11:
    Packets: Sent = 4, Received = 4, Lost = 0 (0% loss),
Approximate round trip times in milli-seconds:
    Minimum = 4ms, Maximum = 9ms, Average = 5ms
```

```
C:\>arp -a
  Internet Address      Physical Address      Type
  192.168.1.11          0001.9679.834e        dynamic
```

Scenario B: Router Interface Shutdown

```
None
! On R1:
R1# configure terminal
R1(config)# interface g0/0
R1(config-if)# shutdown
! From PC1: ping 192.168.1.1 - Observe failure
! Use 'tracert' or examine ARP table
! Fix: R1(config-if)# no shutdown
```

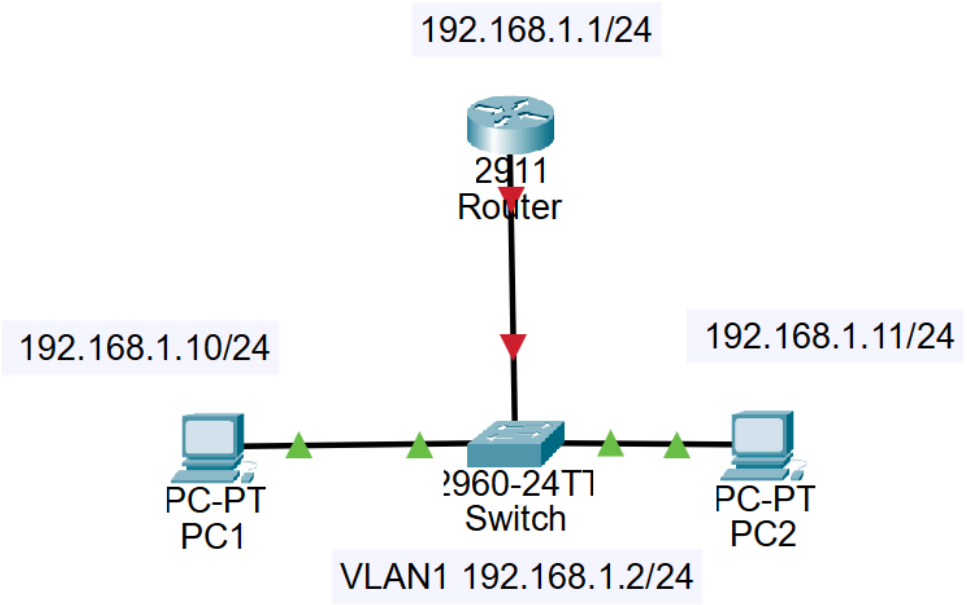


```
R1#conf t
Enter configuration commands, one per line.  End with CNTL/Z.
R1(config)#interface g0/0
R1(config-if)#shutdown

R1(config-if)#
```

จะเห็นได้ว่า ping Router ไม่ได้

```
C:\>ping 192.168.1.1

Pinging 192.168.1.1 with 32 bytes of data:

Request timed out.
Request timed out.
Request timed out.
Request timed out.

Ping statistics for 192.168.1.1:
    Packets: Sent = 4, Received = 0, Lost = 4 (100% loss),
```

```
C:\>tracert 192.168.1.1

Tracing route to 192.168.1.1 over a maximum of 30 hops:

  1   *        *        *        Request timed out.
  2   *        *        *        Request timed out.
  3   *        *        *        Request timed out.
  4   *        *        *        Request timed out.
  5   *        *        *        Request timed out.
  6   *        *        *        Request timed out.
  7   *        *        *        Request timed out.
  8   *        *        *        Request timed out.
  9   *        *        *        Request timed out.
  10   *        *        *        Request timed out.
  11   *        *        *        Request timed out.
  12   *        *        *        Request timed out.
  13   *        *        *        Request timed out.
  14   *        *        *        Request timed out.
  15   *        *        *        Request timed out.
```

```
R1#conf t
Enter configuration commands, one per line.  End with CNTL/Z.
R1(config)#interface g0/0
R1(config-if)#no shutdown
R1(config-if)#
```

```
C:\>ping 192.168.1.1

Pinging 192.168.1.1 with 32 bytes of data:

Reply from 192.168.1.1: bytes=32 time=4ms TTL=255
Reply from 192.168.1.1: bytes=32 time=4ms TTL=255
Reply from 192.168.1.1: bytes=32 time=4ms TTL=255
Reply from 192.168.1.1: bytes=32 time=4ms TTL=255

Ping statistics for 192.168.1.1:
    Packets: Sent = 4, Received = 4, Lost = 0 (0% loss),
Approximate round trip times in milli-seconds:
    Minimum = 4ms, Maximum = 4ms, Average = 4ms
```

Scenario C: Wrong Default Gateway

```
None
! On PC2:
PC2> ipconfig /dg 192.168.1.99
! Attempt ping from PC2 to R1
! Use 'route print' (Windows) to verify gateway
! Fix: Restore to 192.168.1.1
```

เปลี่ยน Default Gateway เป็น `192.168.1.99`

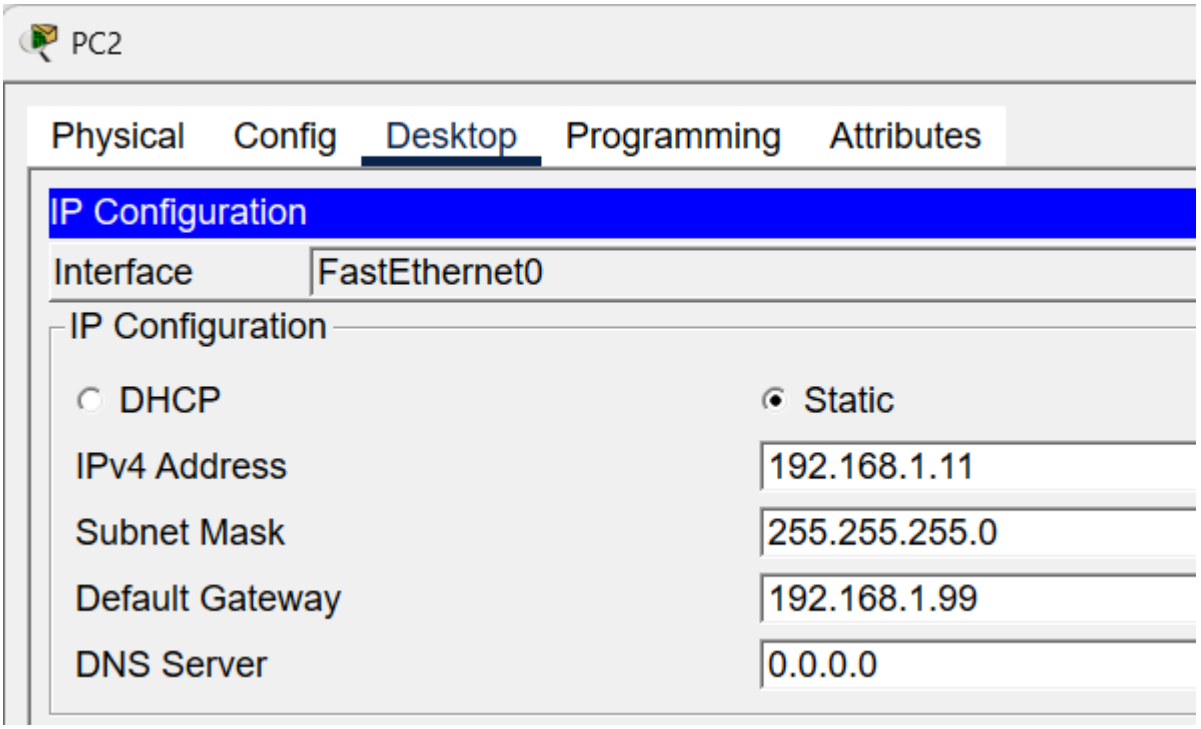

ยังPing Router ได้ IP ของ PC2 และ IP ของ R1 นั้นอยู่ในเครือข่ายวงเดียวกัน มันจะ ไม่สนใจและไม่เดินไปหา Default Gateway

```
C:\>ping 192.168.1.1

Pinging 192.168.1.1 with 32 bytes of data:

Reply from 192.168.1.1: bytes=32 time=8ms TTL=255
Reply from 192.168.1.1: bytes=32 time=4ms TTL=255
Reply from 192.168.1.1: bytes=32 time=4ms TTL=255
Reply from 192.168.1.1: bytes=32 time=4ms TTL=255

Ping statistics for 192.168.1.1:
    Packets: Sent = 4, Received = 4, Lost = 0 (0% loss),
Approximate round trip times in milli-seconds:
    Minimum = 4ms, Maximum = 8ms, Average = 5ms
```

PART 5: ADVANCED OBSERVATION (15 minutes)

Step 9: Protocol Stack Verification

```
None
! From PC1, generate extended ping with different protocols:
PC1> ping 192.168.1.11 -n 5 -l 1500  ! Test MTU/fragmentation
PC1> arp -d *  ! Clear ARP cache, then ping to observe ARP process

! On S1, observe MAC table changes:
S1# clear mac address-table dynamic
S1# show mac address-table  ! Observe empty table
! Generate traffic, then check again
```

```
C:\>ping 192.168.1.11 -n 5

Pinging 192.168.1.11 with 32 bytes of data:

Reply from 192.168.1.11: bytes=32 time=8ms TTL=128
Reply from 192.168.1.11: bytes=32 time=4ms TTL=128
Reply from 192.168.1.11: bytes=32 time=4ms TTL=128
Reply from 192.168.1.11: bytes=32 time=4ms TTL=128
Reply from 192.168.1.11: bytes=32 time=4ms TTL=128

Ping statistics for 192.168.1.11:
    Packets: Sent = 5, Received = 5, Lost = 0 (0% loss),
Approximate round trip times in milli-seconds:
    Minimum = 4ms, Maximum = 8ms, Average = 4ms

C:\>ping 192.168.1.11 -l 1500
Invalid Command.

C:\>arp -d *
Invalid Command.

C:\>arp -d
C:\>
```

รันคำสั่ง Ping แบบกำหนดขนาด และ เคลียร์ ARP Cache

การเคลียร์ Switch S1

```
S1>enable
S1#clear mac address-table dynamic
S1#show mac address-table
          Mac Address Table
-------------------------------------------

Vlan    Mac Address       Type        Ports
----    -----------       --------    -----
```

หลังจากทำ Generate traffic : PC1 to PC2

```
S1#show mac address-table
          Mac Address Table
-------------------------------------------

Vlan    Mac Address       Type        Ports
----    -----------       --------    -----

   1    00e0.b016.0401    DYNAMIC     Gig0/1
S1#
```

Step 10: Documentation

Create a **protocol interaction diagram** showing:

1. Application data generation (simulated)
2. TCP segment creation (if applicable)
3. IP packet encapsulation
4. Ethernet framing
5. Physical transmission

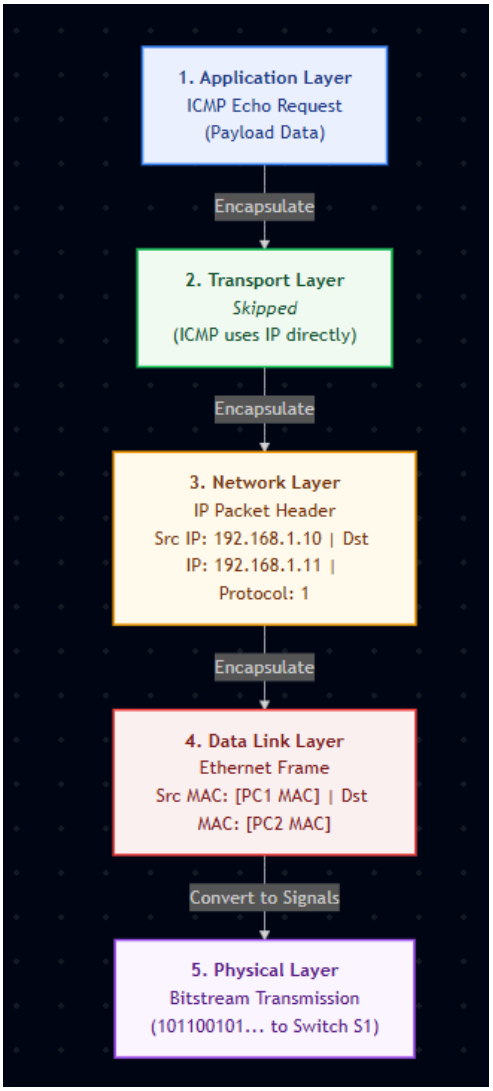

📝 LAB DELIVERABLES

Worksheet 1: Configuration Verification

Checkpoint	Command Used	Expected Result	Actual Result	Pass/Fail
R1 Interface Status	`show ip int brief`	G0/0 UP/UP	G0/0 UP/UP	Pass
S1 VLAN Config	`show vlan brief`	VLAN 1 Active	VLAN 1 Active	Pass
PC1 Connectivity	`ping 192.168.1.11`	Success (4 replies)	4 replies	Pass
ARP Resolution	`arp -a` on PC1	2+ entries	3 entries	Pass
MAC Learning	`show mac address-table` on S1	2 dynamic entries	3 dynamic entries	Pass

Worksheet 2: Protocol Analysis

Capture this data during simulation:

1. **ARP Request Frame:**

   - Source MAC: _____0010.1152.91AC_____
   - Destination MAC: _____192.168.1.11_____
   - ARP Opcode: _____1_____

2. **ICMP Echo Packet:**

   - Time to Live (TTL): _____128_____
   - Protocol Field: _____1_____ (Value = 1)

3. **Encapsulation Chain:** Data → ___ICMP__ Header → __IP____ Header → _____ Header → Bits

Worksheet 3: Troubleshooting Journal

Problem Injected	Symptoms Observed	Diagnostic Commands Used	Root Cause	Solution
Wrong Subnet Mask	ปิงหาเครื่องในวงแลนเดียวกันได้ปกติ แต่ไม่สามารถปิงออกไปยังเครือข่ายอื่นได้ หรือบางครั้งเกิดการส่งข้อมูลผิดพลาด	`ping`, `arp -a`	เครื่อง PC คำนวณขอบเขตของเครือข่าย ผิดพลาด ทำให้แยกไม่ออกว่า IP ปลายทางอยู่ข้างในหรือข้างนอกวงแลน	เข้าไปที่เมนู IP Configuration ของ PC แล้วแก้ไขค่า Subnet Mask ให้ถูกต้องตามรูปแบบของเครือข่าย
Interface Shutdown	สายเคเบิลใน Packet Tracer จะขึ้นจุดสีแดง ไม่สามารถส่งข้อมูลผ่านเส้นทางนั้นได้เลย ปิงไปหาอุปกรณ์ปลายทางจะขึ้น Request timed out	`show ip int brief`	Interface ของอุปกรณ์เครือข่ายอยู่ในสถานะถูกปิดการใช้งานโดยผู้ดูแลระบบ	เข้าไปที่ CLI ของ Router/Switch เข้าสู่ Interface นั้น แล้วใช้คำสั่ง no shutdown เพื่อเปิดพอร์ตให้ทำงาน (Status เปลี่ยนเป็น Up)
Incorrect Gateway	เครื่อง PC ยังคงปิงคุยกับเครื่องที่อยู่ในวงแลนเดียวกันได้ปกติแต่ไม่สามารถออกอินเทอร์เน็ตหรือปิงข้ามวงแลนได้เลย	`ipconfig`, `tracert`	PC ส่งข้อมูลที่จะออกนอกเครือข่ายไปให้กับ ประตูทางออกที่ไม่มีอยู่จริงหรือผิดตัว ทำให้แพ็กเก็ตข้อมูลถูกดรอปทิ้งไปไม่ถึงปลายทาง	เข้าไปที่ IP Configuration ของ PC แล้วเปลี่ยนค่า Default Gateway ให้ตรงกับ IP ของพอร์ต Router ที่เชื่อมต่อกับวงแลนนั้นอยู่

🔍 VERIFICATION COMMANDS CHECKLIST

Router (R1):

- ☑ `show running-config`
- ☑ `show ip interface brief`
- ☑ `show arp`
- ☑ `show ip route`

Switch (S1):

- ☑ `show running-config`
- ☑ `show vlan brief`
- ☑ `show mac address-table`
- ☑ `show interfaces status`

End Devices:

- ☑ `ipconfig /all` (or equivalent)
- ☑ `arp -a`
- ☑ `ping` to all devices
- ☑ `tracert` (if multi-hop)

🎓 ASSESSMENT QUESTIONS

1. When PC1 pings PC2, which protocol resolves the MAC address before ICMP operates?
   Ans:ARP (Address Resolution Protocol)

2. What would happen if you changed the subnet mask on PC1 to 255.255.255.128?
   Ans: ยังคงใช้งานและ Ping หา PC2 (.11) รวมถึง Router (.1) ได้ปกติเหมือนเดิม

3. Why does the switch not need an IP address for basic frame forwarding?
   Ans: Switch สนใจแค่ **MAC Address**

4. Which OSI layers are involved when R1 forwards a packet between interfaces?
   Ans: เกี่ยวข้อง 3 เลเยอร์ล่าง

5. What is the purpose of the TTL field in the IP header you observed?
   Ans: มีไว้ ป้องกันแพ็กเก็ตวิ่งวนเป็นผีเร่ร่อนในระบบ

📁 PACKET TRACER FILE REQUIREMENTS

File Name: `ITN_Module3_ProtocolLab.pkt` **Required Components:**

- 1× Router 2911 (R1)
- 1× Switch 2960 (S1)
- 2× PCs (PC1, PC2)
- Copper straight-through cables
- All configurations from this lab script
- **Bonus:** Add a server at 192.168.1.100 for HTTP protocol analysis

---

⚠️ COMMON PITFALLS & SOLUTIONS

1. **"Invalid input" errors:** Check IOS version, some commands vary
2. **Ping failures:** Verify no firewalls blocking ICMP on PCs
3. **ARP not showing entries:** Clear ARP cache and generate new traffic
4. **Switch not reachable:** Ensure `ip default-gateway` is set
5. **Simulation too fast:** Use "Capture/Forward" step-by-step mode

---

📈 EXTENSION ACTIVITIES (OPTIONAL)

1. **Add DNS:** Configure a DNS server and use names instead of IPs
2. **Wireshark Capture:** Export packets and analyze in Wireshark
3. **Multi-VLAN:** Create VLAN 10 and move PC2 to observe Layer 3 routing
4. **Protocol Comparison:** Capture HTTP vs ICMP to compare TCP vs UDP behaviors

---

🎯 LAB COMPLETION CRITERIA

- ☑ All devices respond to ping from at least one other device
- ☑ ARP tables show correct IP-MAC mappings
- ☑ Switch MAC table shows both PCs' MAC addresses
- ☑ Simulation clearly shows encapsulation process
- ☑ All troubleshooting scenarios resolved
- ☑ Worksheets completed with accurate data